⚠ Safety Precautions

- Important Notes on exporting this product or equipment containing this product;
  If the end-user or application of this product is related to military affairs or weapons, its export may be controlled by “Foreign Exchange and Foreign Trade Control Law” of Japan where export license will be required before product can be exported from Japan.
- This product is designed and manufactured for use in General Purpose Industrial Equipment and it is not intended to be used in equipment or system that may cause personal injury or death.
- All servicing such as installation, wiring, operation, maintenance and etc., should be performed by qualified personnel only.
- Tighten mounting screws with an adequate torque by taking into consideration strength of the screws and the characteristics of material to which the product will be mounted. Over tightening can damage the screw and/or material; under tightening can result in loosening.
  *Example: apply 2.7 N·m – 3.3 N·m torque when tightening steel screw (M5) to steel surface.
- Install safety equipment to prevent serious accidents or loss that is expected in case of failure of this product.
- Consult us before using this product under such special conditions and environments as nuclear energy control, aerospace, transportation, medical equipment, various safety equipments or equipments which require a lesser air contamination.
- We have been making the best effort to ensure the highest quality of our products, however, some applications with exceptionally large external noise disturbance and static electricity, or failure in input power, wiring and components may result in unexpected action. It is highly recommended that you make a fail-safe design and secure the safety in the operative range.
- If the motor shaft is not electrically grounded, it may cause an electrolytic corrosion to the bearing, depending on the condition of the machine and its mounting environment, and may result in the bearing noise. Checking and verification by customer is required.
- Failure of this product depending on its content may generate smoke of about one cigarette. Take this into consideration when the application of the machine is clean room related.
- Please be careful when using the product in an environment with high concentrations of sulfur or sulfuric gases, as sulfuration can lead to disconnection from the chip resistor or a poor contact connection.
- Do not input a supply voltage which significantly exceeds the rated range to the power supply of this product. Failure to heed this caution may lead to damage of the internal parts, causing smoke and/or fire and other troubles.
- The user is responsible for matching between machine and components in terms of configuration, dimensions, life expectancy, characteristics, when installing the machine or changing specification of the machine. The user is also responsible for complying with applicable laws and regulations.
- Manufacturer’s warranty will be invalid if the product has been used outside its stated specifications.
- Component parts are subject to minor change to improve performance.
- Read and observe the instruction manual to ensure correct use of the product.

Repair	Consult to the dealer from whom you have purchased this product for details of repair work. When the product is incorporated to the machine you have purchased, consult to the machine manufacturer or its dealer.
URL	Electric data of this product (Instruction Manual, CAD data) can be download from the following web site; http://industrial.panasonic.com/ww/products/motors-compressors/fa-motors

Contact to :

ISO 9001 — **ISO9001 Certificate division**

ISO 14001 — **ISO14001 Certificate division**

Panasonic Corporation,
Automotive & Industrial Systems Company,
Smart Factory Solutions Business Division,
Motor Business Unit

1-1 Morofuku 7-chome, Daito, Osaka 574-0044, Japan
Tel : +81-72-871-1212
Fax: +81-72-870-3151

The contents of this catalog apply to the products as of January 2016.

- This product is for industrial equipment. Don't use this product at general household.
- Printed colors may be slightly different from the actual products.
- Specifications and design of the products are subject to change without notice for the product improvement.

<16.1Ⓢ>

Panasonic

AC Servo Motor & Driver <MINAS A6 family, MINAS E series>

2016 / 1

Panasonic

AC Servo Motor & Driver
MINAS A6 family
MINAS E series

2016/1
Catalog

AC Servo Motor & Driver

MINAS A6

This product is for industrial equipment. Don't use this product at general household.

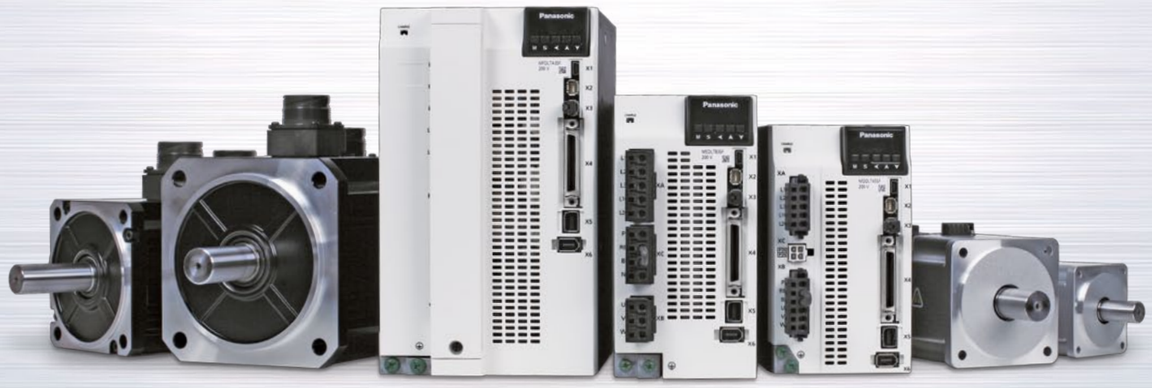

MINAS A6

More compact, more faster and

more easy-to-use Servomotors

that meet the demands of the present age.

The MINAS A6 family of advanced AC servomotors is changing the landscape of industrial machinery.

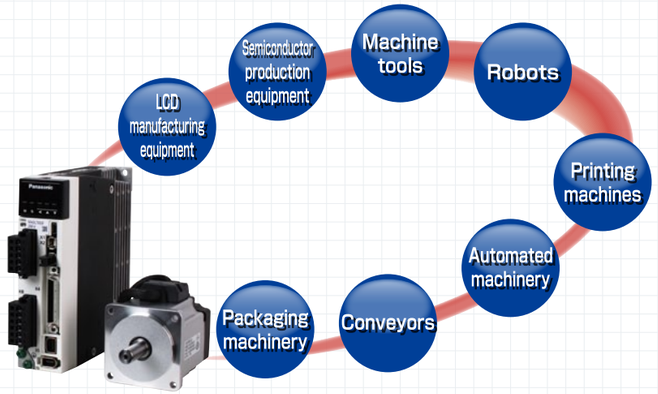

Robots

A robot is required to operate stably despite arm posture and position, workload and other conditions changing from moment to moment.
The MINAS A6 family assures stable operation by suppressing effects of load to a minimum using "adaptive load control."

Processing machinery

With metal processing machine, it is very difficult to render mirror-like finishing on a polygonal body.
The A6 family realizes "3.2 kHz frequency response" to improve feedback responsiveness, thus enabling mirror surfacing without generating lines or streaks.

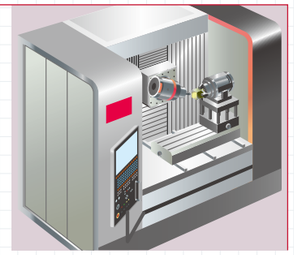

Component mounting machines

The A6 family also shows its versatility when used with a component mounting machine where speed and positional accuracy are demanded.
In addition to high frequency response, it can process accidental disturbances with the help of built-in "adaptive load control," thus maintaining high productivity.

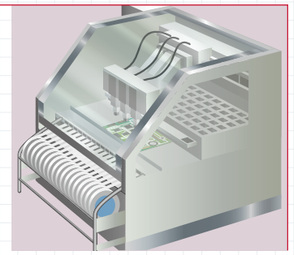

INDEX

A6 family

Servomotors that flexibly and effectively fit into various system configurations

MINAS A6

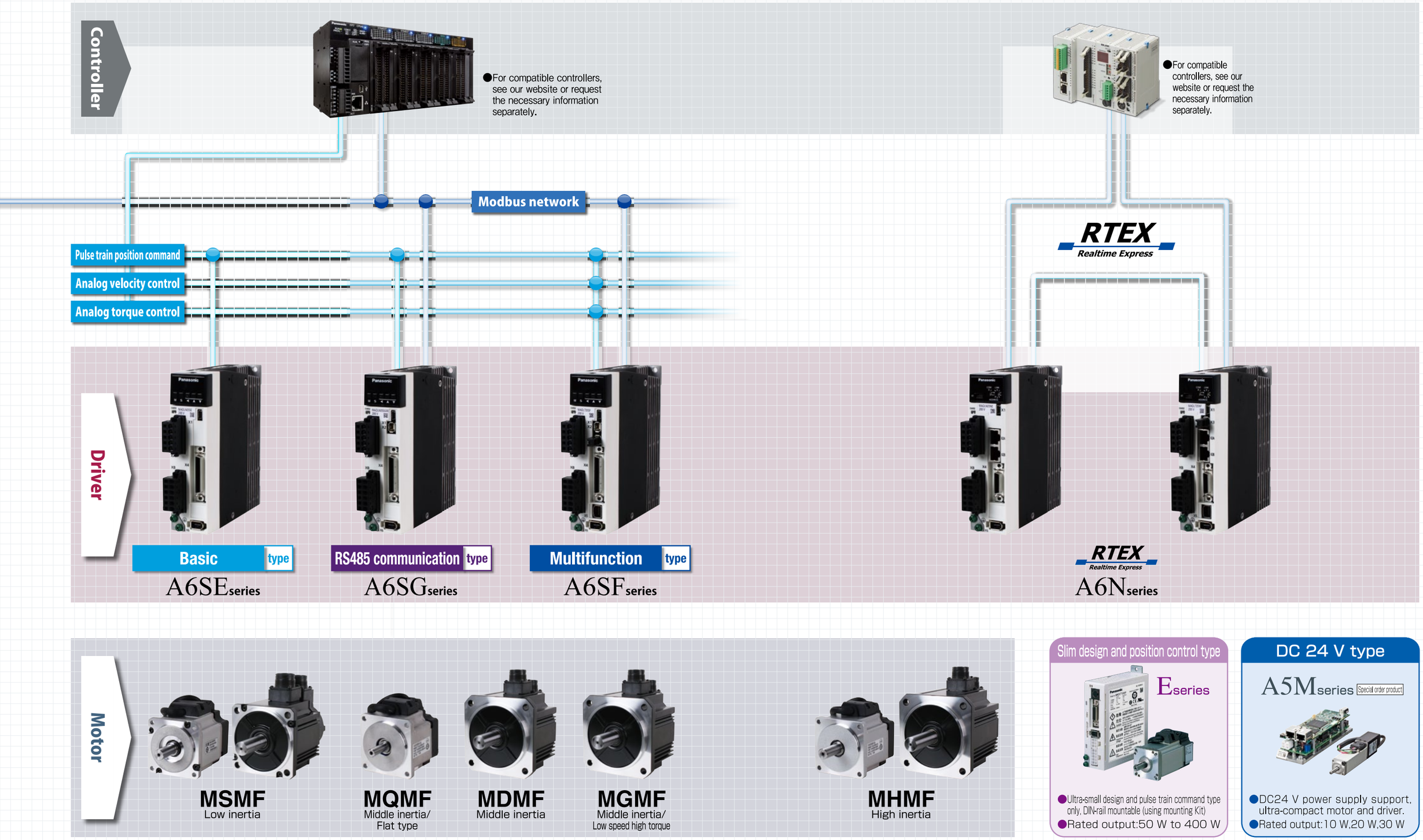

It is MINAS A6 Family lineup that meets the manufacturing industry needs.

MINAS A6

■Motor line-up

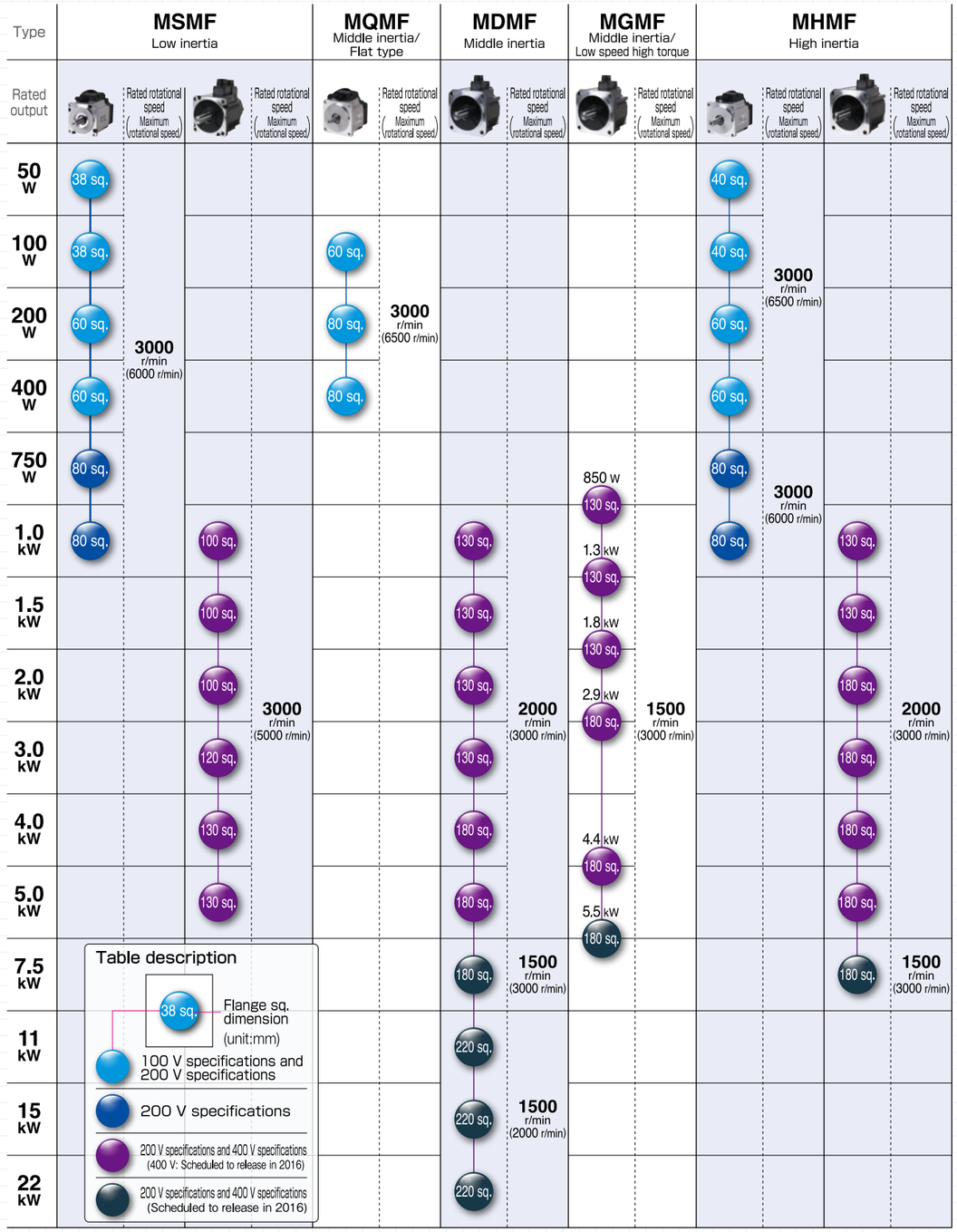

■Driver line-up

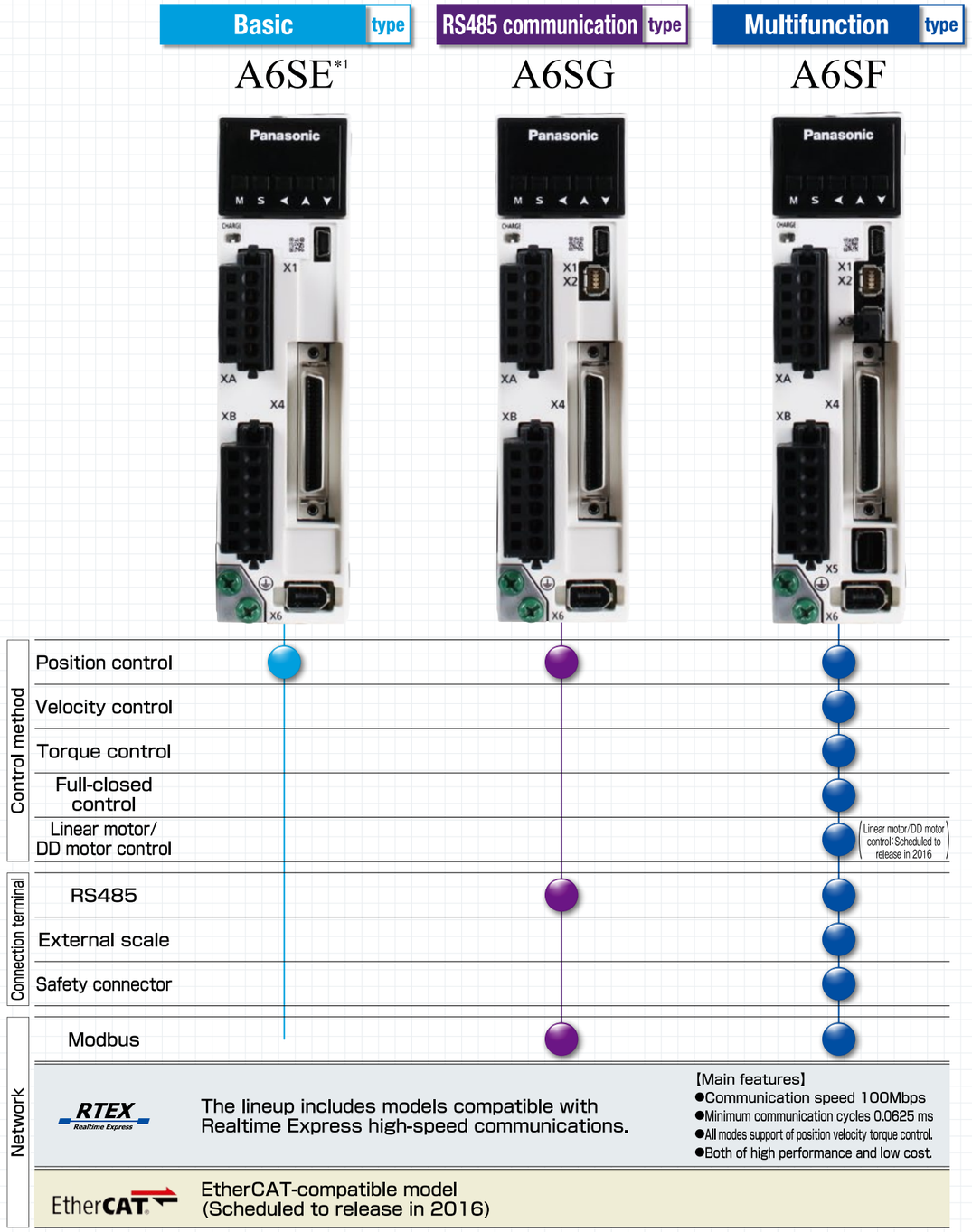

*1 A6SE series driver (Position control only) does not correspond to the absolute system of using the serial communication with the host device. It supports incremental system only.

Small, light, powerful and speedy ※1

MINAS A6

Highest speed in the industry and high torque in a compact lightweight body ※1

Max. speed	Max. torque	Overall length	Weight
6500 r/min ※2	Approx.350 % ※2	67.5 mm ※2	750 g ※2
Fast	High	Short	Light
(A5Family ※3 5000 r/min)	(A5Family ※3 Approx300 %)	(A5Family ※3 99.0 mm)	(A5Family ※3 960 g)

※1 Middle and high inertia types only ※2 MHMF200 W ※3 MSMD200 W

Significantly extended running range by the highest speed and high torque in the industry's highest class.

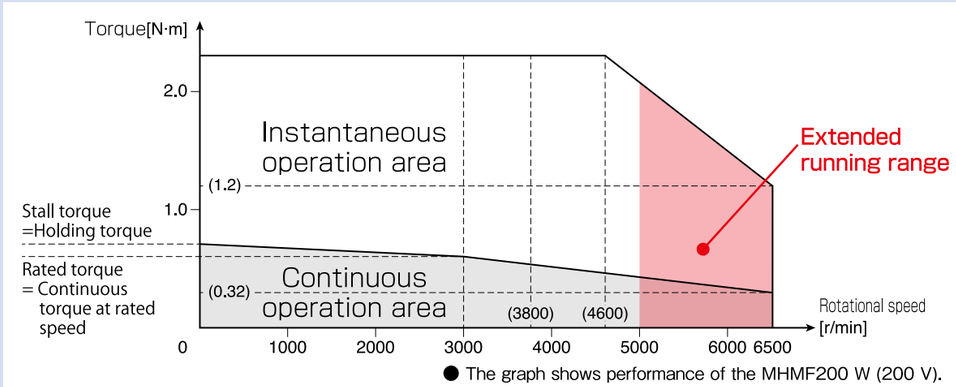

● The graph shows performance of the MHMF200 W (200 V).

Enhanced position detecting resolution enables smoother and more precise positioning.

Encoder		Communication speed		
23 bit (8388608 Pulse / rotation)	+	5 Mbps	=	Low vibrations High speed and high precision positioning
8 times higher resolution		Improved		
(A5Family ※4 20 bit)		(A5Family 2.5 Mbps)		

※4 Incremental encoder

Swifter, smarter and easier to use

MINAS A6

Powered Up compact driver

- New two-degree-of-freedom control system
- Frequency response 3.2 kHz
- Built-in filters and adjusting functions
- PANATERM Support
- Modbus Support (A6SF, A6SG Series)

Full-scale

High-speed response, high-precision positioning for quick and accurate movement

Our proprietary algorithm in addition to upgraded CPU and other hardware realized further high-speed response. Furthermore, high-precision positioning is achieved by automatically eliminating micro vibrations and machine oscillation caused by the resonance.

●Comparison of position setting waveforms

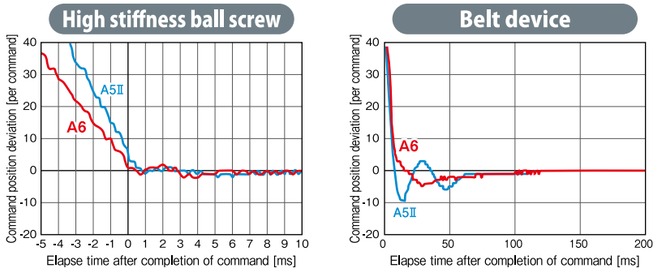

Example of operation with processing machine

A mirror finish is obtained even if a process that tends to cause streaking.

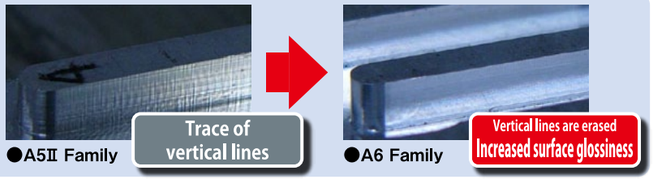

Easy and quick setting, shortening conventional settling time by approx. 64%※1

Newly developed fit gain function substantially reduces adjustment time. Adaptive notch filter and various gains can be automatically set and adjusted.

※1 Comparison with conventional product A5Ⅱfamily

■Settling time
(Measured on low stiffness resonant mechanism)

Ball screw settling time 0 ms

Belt device settling time 4 ms

●The above is a measure based on our test environment

Adjustment completed in only 3 processes

① Condition setting → ② Measurement → ③ Result determination

Load Stiffness
Command response

●Fit gain adjustment window

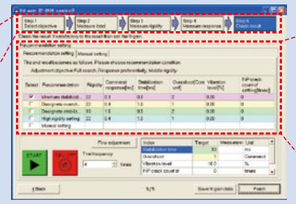

●Automatically proposes various settings

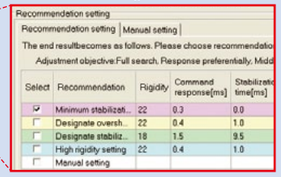

Realized 3.2 kHz frequency response to improve productivity

Realizes 3.2 kHz frequency response. At 139% that of conventional models *1, it enables high-speed operation and improves productivity.

※1 Comparison with conventional product A5Ⅱfamily

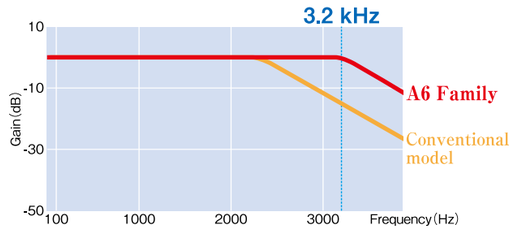

Reduced maintenance work and trouble.

Lineup of motors protected by high dust-proof, high heat-resistant oil seal (With protective lip)

Motors protected by a highly dust-proof, oil-tight oil seal (with protection lip) have been added to the lineup of motor products equipped with oil seals of conventional specifications. The oil seals of this type of motor are made of a material of higher heat resistance.

You can select appropriate motor type according to your application environment such as dusty, powdery or gear connection necessity.

- Oil-seals (with protective lip) are not available for MSMF motors with flange size 80 mm or smaller.
- MQMF and MHMF motors with flange size of 80 mm or smaller provided with oils seals (with protective lip) are not mounting-compatible with A5 Family models.

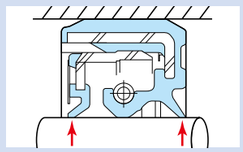

Some products are provided with "protective lip" that prevents dust and oil penetration.

■Applicable oil seals

Flange size	Motor type	With oil seal		With oil seal(with protective lip)		
80 mm or less	MSMF	◎	Made of nitrile rubber (NBR)	No setting		
	MHMF,MQMF	◎		◎	Made of fluororubber	Not mounting-compatible with A5 family products
100 mm or more	All Type	◎		◎		Mounting-compatible with A5 family products

IP67 enclosure rating (Motors with flange size of 80 mm or smaller are order-made products)

Direct-mount connectors are used for the motor power supply and encoder input and output to improve sealing performance of the motor to IP67.

- IP67-compatible motors with flange size of 80 mm or smaller are order-made products.
- For environmental conditions of applications, refer to P. 165.

Adoption of direct-mount connector

What is IP?

An international standard that specifies the degree of dustproof and waterproof performance. (IP: Ingress Protection)

IP- 6 7

Protection level against dust	
1	Protected against solid objects over 50 mm in diameter.
2	Protected against solid objects over 12.5 mm in diameter.
3	Protected against solid objects over 2.5 mm in diameter.
4	Protected against solid objects over 1.0 mm in diameter.
5	Dust-proof type: Protected against dust penetration. Continues normal operation even if penetrated by a small quantity of dust.
6	Dust-tight type: Totally protected against dust penetration.

Protection level against water penetration	
1	Protected against vertically falling drops of water or condensation.
2	Protected against falling drops of water, if the case is inclined no more than 15° off vertical.
3	Protected against sprays of water from any direction, even if the case is inclined no more than 60° off vertical.
4	Protected against water splashed from any direction.
5	Protected against direct low pressure water jets from any direction. Limited penetration permitted.
6	Protected against direct high pressure water jets from any direction. Limited penetration permitted.
7	Protected against water penetration when immersed in water for the specified period of time and under the specified pressure.
8	Protected against water penetration when immersed in water for long, continuous periods of time.

Dynamic braking

With parameter settings, you can select dynamic braking, which shorts servomotor windings U, V and W at Servo-OFF, during positive direction/ negative direction, and during power shutdown and tripping of the circuit breaker for over travel inhibition.

・The desired action sequence can be set up to accommodate your machine requirements.

Inrush current preventive function

This driver is equipped with a rush current preventive resistor to prevent the circuit breaker from shutting off the power supply as a result of inrush current occurring at power-on.

Parameter initialization

Using the front panel or by connecting a PC, you can restore the parameters to the factory settings.

Other driver functions

MINAS A6

Supports semi-/full-closed loop (8 Mpps input pulse, 4 Mpps output pulse) control.

Supports full-closed loop control. The A6SF series accommodates a command input of 8 Mpps and feedback output of 4 Mpps, enabling high-resolution, high-speed operation.Supports the industry's leading positioning resolution commands (pulse-train commands).

- The A6SE and A6SG series do not support full-closed loop control.
- Applicable scale: AB-phase feedback scale (general purpose product) and serial feedback scale (dedicated to Panasonic format product)

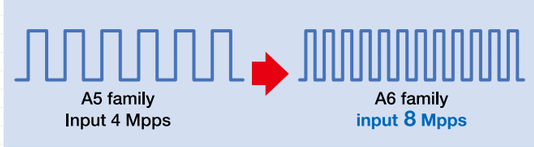

Manual/Auto notch filter

Equipped with auto-setting notch filters for greater convenience. Now there is no need to measure troublesome vibration frequencies. Our notch filters automatically detect vibration and provide simple auto-setting.

These notch filters greatly reduce noise and vibration caused by equipment resonance and respond quickly.

The A6 family is equipped with 5 notch filters with frequencies settable from 50 Hz to 5000 Hz. Depth can be individually adjusted within this range. (Two of the filters share automatic settings.)

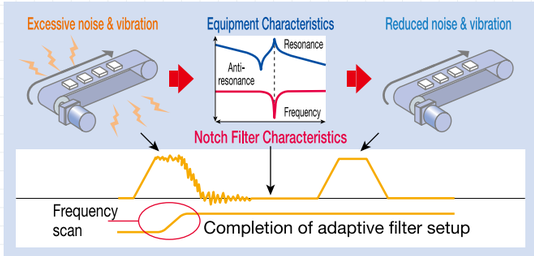

Manual/Auto damping filter

Equipped with a damping filter that is automatically set through the setup support software.This filter removes the natural vibration frequency component from the command input, greatly reducing vibration of the axis when stopping. The number of filters for simultaneous use has been increased to three from the conventional two filters.（Two from one in the two-degree-of-freedom-control mode.）The adaptive frequency has also been significantly expanded from 0.5 Hz to 300 Hz.

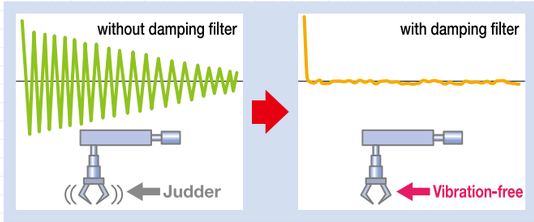

Adaptive load control

Adaptive load control automatically sets the best suitable gain table in response to fluctuations in inertia caused by changes in workload, thus keeping machines operating stably at all times.

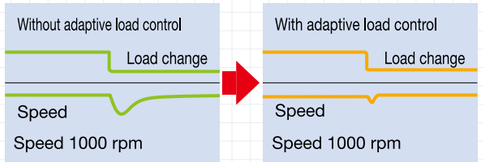

3-step gain

A 3-step gain switch is available in addition to the normal gain switch.This chooses appropriate gain tunings at both stopping and running. The 3-step gain switch gives you choices of 3 different tunings for normal running, stopping for faster positioning and at stopping. The right gaining tunings achieve lower vibration and quicker positioning time of your application.

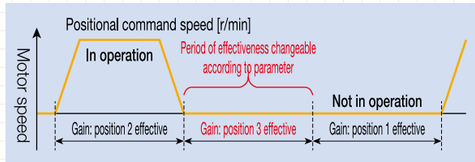

Regenerative energy discharge

A regenerative resistor is used to discharge regenerative energy, which is the energy generated when stopping a load with a large moment of inertia or when using this unit in vertical operation. This energy is returned to the driver from the motor.

- Frame A, and frame B model drivers do not contain a regenerative resistor. Optional regenerative resisters are recommended.
- Frame C to frame F model drivers contain one regenerative resistor; however, adding an optional regenerative resistor provides additional regeneration capability.

Friction torque compensation

This function reduces the effect of machine related friction and improves responsiveness. Three kinds of friction compensation can be set: unbalanced load compensation, which sets an offset torque that is constantly applied; kinetic friction compensation, which changes direction in response to the direction of movement; and viscous friction compensation, which changes according to the speed command.

Inertia ratio conversion

You can adjust right inertia ratio by Inertia ratio conversion input (J-SEL) of interface.When you have significant load inertia changes, it can adjust unbalanced speed and position gain turning combination.It ends up quicker response of your system.

Input/output signal assignment

You can use the parameters to arbitrarily allocate the universal 10 inputs and 6 outputs. (Inputs can be selected as either A contacts or B contacts). The Panaterm setup software provides an exclusive screen for a more simplified setup.

Torque limiter switching

These can be used for applications such as simplified pressure, tension control, and sensor-less homing.

Multifunctional software for quick adjustment support

PNATERM set-up support software

The PANATERM set-up support software, with many added features. The PANATERM assists users in setting parameters, monitoring control conditions, setup support, and analyzing mechanical operation data on the PC screen, when installed in a commercially available personal computer, and connected to the MINAS A6 Family through the USB interface. Choose either English, Japanese, Chinese-language display.

Please download from our web site and use after install to the PC.
http://industrial.panasonic.com/ww/products/motors-compressors/fa-motors

Setup wizard

This wizard supports fundamental settings in each control mode step by step, including reading of default setting. In On-line condition, Input data related to each step can be monitored in real time.

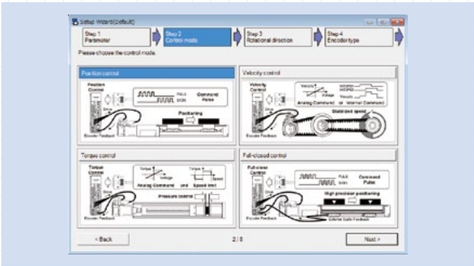

The fit gain function for setting Two-degree-of-freedom control.

1) Select the adjustment method 2) Load measurement
3) Confirming results Adjust gain to meet your needs

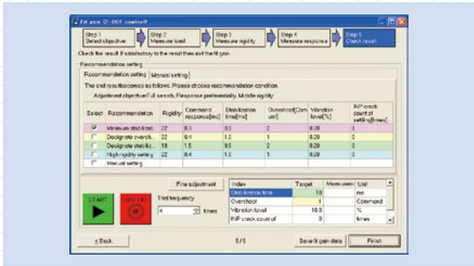

Frequency characteristics measurement function

Can check frequency response characteristics of the mechanism and motor. Since resonance frequency of the mechanism is measurable, it is effective for start-up time reduction.

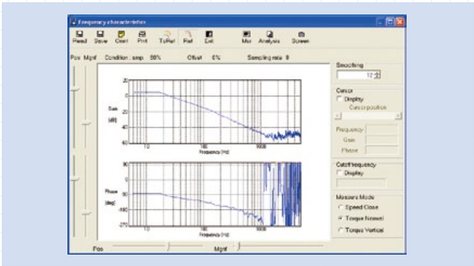

Trial run

This function supports positioning with the Z-phase search and software limit.

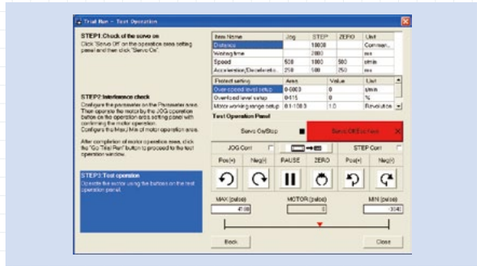

Fit gain

This function automatically searches the best suitable stiffness setting and mode and adjusts the gain once the target in-position range and setting time are set.

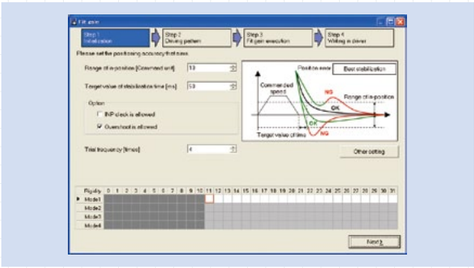

Service Life Prediction

The service life prediction function considers the internal temperature for main components such as the fan and condenser. If the rated value is exceeded, an alarm is displayed. This approach prevents unexpected suspension of operation and allows for planning of systemized maintenance.

Note: The life span prediction value should be considered as a guide only.

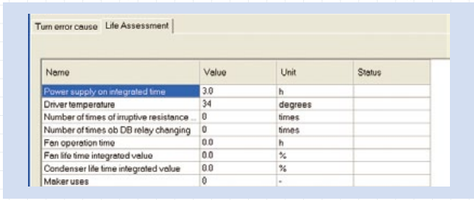

Turn error cause | Life Assessment

Name	Value	Unit	Status
Power supply on integrated time	3.0	h	
Driver temperature	34	degrees	
Number of times of inruptive resistance	0	times	
Number of times ob DB relay changing	0	times	
Fan operation time	0.0	h	
Fan life time integrated value	0.0	%	
Condenser life time integrated value	0.0	%	
Maker uses	0	-	

Added New screen for gain adjustment, equipped with stiffness oscillation auto-reduction function

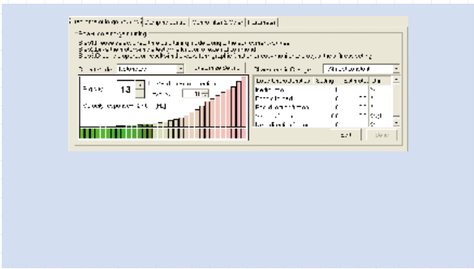

Significant increase of measuring objects Multi-functional waveform graphic

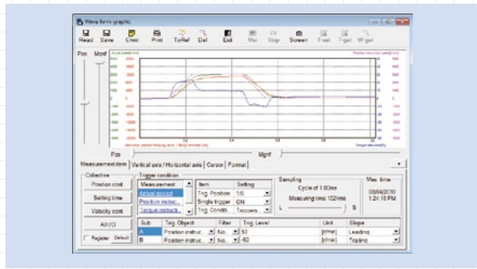

Encoder temperature monitor

The Encoder Temperature Monitor is a new function capable of real-time measurement of the interior temperature of the encoder, something that has been difficult to achieve in the past. It is valuable for monitoring the motor and can be used as a diagnostic in the event of a malfunction .

Other New Function

The software offers a wide range of convenient features including motor and driver data such as load factor, voltage, and driver temperature. Moreover, the logging function records the interface history. As well, a non-rotating contributing factor display function.

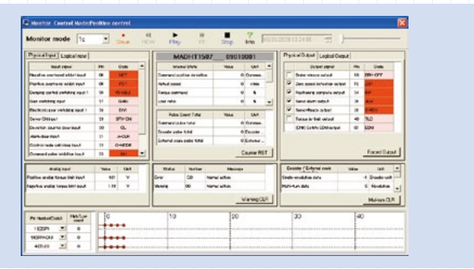

• Hardware configuration

Personal computer	CPU	800 MHz or more
	Memory	System memory 512MB or more Graphics memory 32MB or more
	Hard disk capacity	Vacancy of 512MB or more recommended
	OS	Windows® Vista SP1(32 bit) , Windows® 7(32 bit,64 bit) , Windows® 8(32 bit , 64 bit) Japanese, English, Chinese (Simplified) ver ,
	Serial communication function	USB port, COM port (Communication speeds: 24000115200 bps) * A COM port is required to use RS232 communications. A 9600 bps or higher baud rate is recommended.
Display	Resolution	1024 × 768 pix or more
	Number of colors	24bit colors (TrueColor) or more

<CAUTION> This software is applicable only to A5 family,A6 family. To apply this software to A, AⅢ, E or A4 series, consult our distributors.

Compliance with MINAS A6 international standards

(A6SF series) (A6SE,A6SG series)

		Driver	Motor
EU Directives	EMC Directives	EN55011 EN61000-6-2 EN61000-6-4 EN61800-3	–
	Low-Voltage Directives	EN61800-5-1 EN50178	EN60034-1 EN60034-5
	Machinery Directives Functional safety *1	ISO13849-1(PL e , Cat.3) EN61508(SIL3) EN62061(SILCL 3) EN61800-5-2(SIL3、STO) IEC61326-3-1 IEC60240-1	–
UL Standards		UL508C (E164620)	UL1004-1 , UL 1004-6 (E327868)
CSA Standards		C22.2 No.14	C22.2 No.100 -04
Radio Waves Act (South Korea) (KC)*2		KN11 KN61000-4-2,3,4,5,6,8,11	–

IEC : International Electrotechnical Commission
EN : Europaischen Normen
EMC : Electromagnetic Compatibility
UL : Underwriters Laboratories
CSA : Canadian Standards Association

Pursuant to the directive 2004/108/EC, article 9(2)
Panasonic Testing Centre
Panasonic Service Europe, a division of
Panasonic Marketing Europe GmbH
Winsbergring 15, 22525 Hamburg, F.R. Germany

- When export this product, follow statutory provisions of the destination country.

*1 A6SE and A6SG series doesn't correspond to the functional safety standard.
*2 Information related to the Korea Radio Law
This servo driver is a Class A commercial broadcasting radio wave generator not designed for home use.
The user and dealer should be aware of this fact.

A 급 기기 (업무용 방송통신기자재)
이 기기는 업무용(A 급) 전자파적합기기로서 판매자
또는 사용자는 이 점을 주의하시기 바라며, 가정외의
지역에서 사용하는 것을 목적으로 합니다.

(대상기종 : Servo Driver)

This products is not an object of china compulsory certification (CCC).

Low noise, compliant with EMC directives

Radiated noise is minimized to meet EMC directives and to support international standards.

Compliance with EU safety standards.

Features non-software-based independent redundant circuitry for motor power isolation. Independent redundant circuitry for motor power isolation. This obviates the need for magnetic contactors to isolate the required motor in order to accommodate low-voltage machinery commands.(The final safety compliance must be applied as machine.)

SEMI-F47

Includes a function in compliance with the SEMI F47 standard for voltage sag immunity under no load or light load. Ideal for the semiconductor and LCD industries.

- Excluding the single-phase 100-V type.
- Please verify the actual compliance with your machine checking the F47 standard for voltage sag immunity.

Ultra-high-speed network driver *Realtime Express* (RTEX)

RTEX Realtime Express MINAS A6N

Greatly improved basic performance

Pursuit of ultimate real-time processing

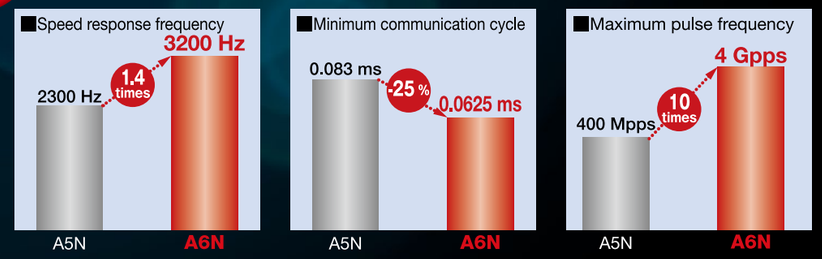

- Max. 4 Mpps, when using AB-phase external scale

Multifunctional capabilities to match various needs

◎Supports all positions, speeds and torque modes (w/ built-in positioning function).
◎High-precision position latch and comparison
◎Communication cycle can be set to any time between 2 ms and 62.5 µs.

Simple network

◎Satisfies both high performance and low cost requirements.
◎Synchronization established by communication IC
◎Easier development of compatible equipment

System configuration example

Commercially available Ethernet cable | Ring topology of high transmission efficiency | The proprietary error correction function guarantees 2.5 kV or higher noise resistance. | Materials except for servomotors are provided by partner companies. *1 | Up to 32 nodes: Max. 100 m cable length between nodes

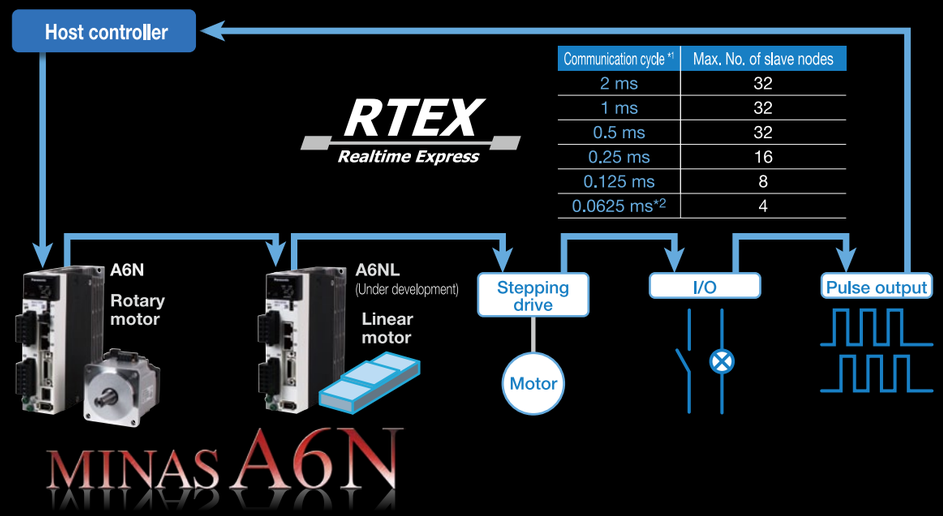

Communication cycle *1	Max. No. of slave nodes
2 ms	32
1 ms	32
0.5 ms	32
0.25 ms	16
0.125 ms	8
0.0625 ms*2	4

- Realtime Express and RTEX are registered trademarks of Panasonic Corporation. Realtime Express is a high-speed synchronous motion network we developed.*1 Communication cycle and connections to slave devices other than servomotors should be made according to controller specifications.*2 Commands are updated every 0.125 ms when the communication cycle is 0.0625 ms.

Motor Line-up

Motor Line-up

Motor			Rated output (kW)	Rated rotational speed (Max. speed) (r/min)	Rotary encoder 23-bit absolute	Enclosure (*1)	Motor lead-out configuration	Features	Applications
Low inertia	MSMF	 80 mm sq. or less	0.05 0.1 0.2 0.4 0.75 1.0	3000 (6000)	○	IP65	Leadwire	· Small capacity · Suitable for high speed application · Suitable for all applications	· Bonder · Semiconductor production equipment · Packing machines etc
		 80 mm sq. or less	0.05 0.1 0.2 0.4 0.75 1.0	3000 (6000)	○	IP67	Connector		
		 100 mm sq. or more	1.0 1.5 2.0 3.0	3000 (5000)	○	IP67	Connector	· Middle capacity · Suitable for the machines directly coupled with ball screw and high stiffness and high repetitive application	· SMT machines · Food machines · LCD production equipment etc
			4.0 5.0	3000 (4500)					
Middle inertia	MQMF (Flat type)	 80 mm sq. or less	0.1 0.2 0.4	3000 (6500)	○	IP65	Leadwire	· Small capacity · Flat type and suitable for low stiffness machines with belt driven	· SMT machines · Inserter machines · Belt drive machines · unloading robot
		 80 mm sq. or less	0.1 0.2 0.4	3000 (6500)	○	IP67	Connector		
	MDMF	 130 mm sq. or more	1.0 1.5 2.0 3.0 4.0 5.0	2000 (3000)	○	IP67	Connector	· Middle capacity · Suitable for low stiffness machines with belt driven	· Conveyors · Robots · Machine tool etc
	MGME (Low speed/High torque type)	 130 mm sq. or more	0.85 1.3 1.8 2.9 4.4	1500 (3000)	○	IP67	Connector	· Middle capacity · Suitable for low speed and high torque application	· Conveyors · Robots · Textile machines etc
High inertia	MHMF	 80 mm sq. or less	0.05 0.1 0.2 0.4	3000 (6500)	○	IP65	Leadwire	· Small capacity · Suitable for low stiffness machines with belt driven	· Conveyors · Robots etc
			0.75 1.0	3000 (6000)					
		 80 mm sq. or less	0.05 0.1 0.2 0.4	3000 (6500)	○	IP67	Connector		
			0.75 1.0	3000 (6000)					
		 130 mm sq. or more	1.0 1.5 2.0 3.0 4.0 5.0	2000 (3000)	○	IP67	Connector	· Middle capacity · Suitable for low stiffness machines with belt driven, and large load moment of inertia	· Conveyors · Robots · LCD manufacturing equipment etc

(*1) Except for output shaft, and connector.

*** For possible combinations of motors and drivers, see P. 23 to P. 32.**

- When using a rotary encoder as an absolute system (using multi-turn data), connect a battery to the absolute encoder.
- When using a rotary encoder as an incremental system (not using multi-turn data), do not connect a battery for absolute encoder.

Model Designation

* For combination of elements of model number, refer to Index P.272.

Servo Motor

M S M F 5 A Z L 1 A 1 ＊ — Special specifications

① ② ③ ④ ⑤ ⑥ ⑦

① Type

Symbol	Type	
MSM	Low inertia	(50 W to 5.0 kW)
MQM	Middle inertia	(100 W to 400 W)
MDM	Middle inertia	(1.0 kW to 5.0 kW)
MGM	Middle inertia	(0.85 kW to 4.4 kW)
MHM	High inertia	(50 W to 5.0 kW)

② Series

Symbol	Series name
F	A6 series

③ Motor rated output

Symbol	Rated output
5A	50 W
01	100 W
02	200 W
04	400 W
08	750 W
09	0.85 kW, (130 mm sq.) 1000 W (80 mm sq.)
10	1.0 kW
13	1.3 kW
15	1.5 kW
18	1.8 kW
20	2.0 kW
29	2.9 kW
30	3.0 kW
40	4.0 kW
44	4.4 kW
50	5.0 kW

④ Voltage specifications

Symbol	Specifications
1	100 V
2	200 V
Z	100 V/ 200 V common (50 W only)

⑥ Design order

Symbol	Specifications
1	Standard

<Note>
When using a rotary encoder as an incremental system (not using multi-turn data), do not connect a battery for absolute encoder.

⑤ Rotary encoder specifications

Symbol	Format	Pulse counts	Resolution	Wires
L	Absolute	23-bit	8388608	7

⑦ Motor specifications: 100 mm sq. or more MSMF, MHMF, MDMF, MGMF

Symbol		Shaft		Holding brake		Oil seal		Encorder terminal	
		Round	Key-way	without	with	with	With protective lip	Connector JN2 (Small size)	Connector JL10 (Large size)*2
C	5	●		●		●		●	
C	6	●		●		●			●
C	7	●		●			●	●	
C	8	●		●			●		●
D	5	●			●	●		●	
D	6	●			●	●			●
D	7	●			●		●	●	
D	8	●			●		●		●
G	5		●	●		●		●	
G	6		●	●		●			●
G	7		●	●			●	●	
G	8		●	●			●		●
H	5		●		●	●		●	
H	6		●		●	●			●
H	7		●		●		●	●	
H	8		●		●		●		●

⑦ Motor specifications: 80 mm sq. or less MSMF 50 W to 1000 W

Symbol		Shaft		Holding brake		Oil seal		Motor encorder terminal *1	
		Round	Key-way, center tap	without	with	without	with	Connector JN	Lead wire
A	1	●		●		●		●	
A	2	●		●		●			●
B	1	●			●	●		●	
B	2	●			●	●			●
C	1	●		●			●	●	
C	2	●		●			●		●
D	1	●			●		●	●	
D	2	●			●		●		●
S	1		●	●		●		●	
S	2		●	●		●			●
T	1		●		●	●		●	
T	2		●		●	●			●
U	1		●	●			●	●	
U	2		●	●			●		●
V	1		●		●		●	●	
V	2		●		●		●		●

⑦ Motor specifications: 80 mm sq. or less MHMF 50 W to 1000 W MQMF 100 W to 400 W

Symbol		Shaft		Holding brake		Oil seal			Motor encorder terminal *1	
		Round	Key-way, center tap	without	with	without	with	With protective lip	Connector JN	Lead wire
A	1	●		●		●			●	
A	2	●		●		●				●
B	1	●			●	●			●	
B	2	●			●	●				●
C	1	●		●			●		●	
C	2	●		●			●			●
C	3	●		●				●	●	
C	4	●		●				●		●
D	1	●			●		●		●	
D	2	●			●		●			●
D	3	●			●			●	●	
D	4	●			●			●		●
S	1		●	●		●			●	
S	2		●	●		●				●
T	1		●		●	●			●	
T	2		●		●	●				●
U	1		●	●			●		●	
U	2		●	●			●			●
U	3		●	●				●	●	
U	4		●	●				●		●
V	1		●		●		●		●	
V	2		●		●		●			●
V	3		●		●			●	●	
V	4		●		●			●		●

*1 Connector type: IP67, Lead wire type: IP65
*2 Connector on the motor side encoder. (Also applicable to screwed type.)

Servo Driver

M A D L N 1 5 S E ＊＊＊ — Special specifications

① ② ③ ④ ⑤ ⑥ ⑦

① Frame symbol

Symbol	Frame	Symbol	Frame
MAD	A-Frame	MDD	D-Frame
MBD	B-Frame	MED	E-Frame
MCD	C-Frame	MFD	F-Frame

② Series

Symbol	Series name
L	A6 series

③ Safety Function

Symbol	Specifications
N	without the safety function
T	with the safety function

④ Max. current rating

Symbol	Current rating	Symbol	Current rating
0	6 A	5	40 A
1	8 A	8	60 A
2	12 A	A	100 A
3	22 A	B	120 A
4	24 A		

⑤ Supply voltage specifications

Symbol	Specifications
1	Single phase 100 V
3	3-phase 200 V
5	Single/3-phase 200 V

⑥ I/f specifications

Symbol (specification)
S (Analog/Pulse)
N (RTEX)
B (EtherCAT)

⑦ Classification of type

Symbol	Specification
E	Basic type (Pulse train only)
F	Multi fanction type (Pulse, analog, full-closed)
G	RS485 communication type (Pulse train only)
E	without the safety function
F	with the safety function
(Scheduled to release in 2016)	

Overall Wiring

<A6 SF Series (Driver: A-frame Motor: 200 W)>

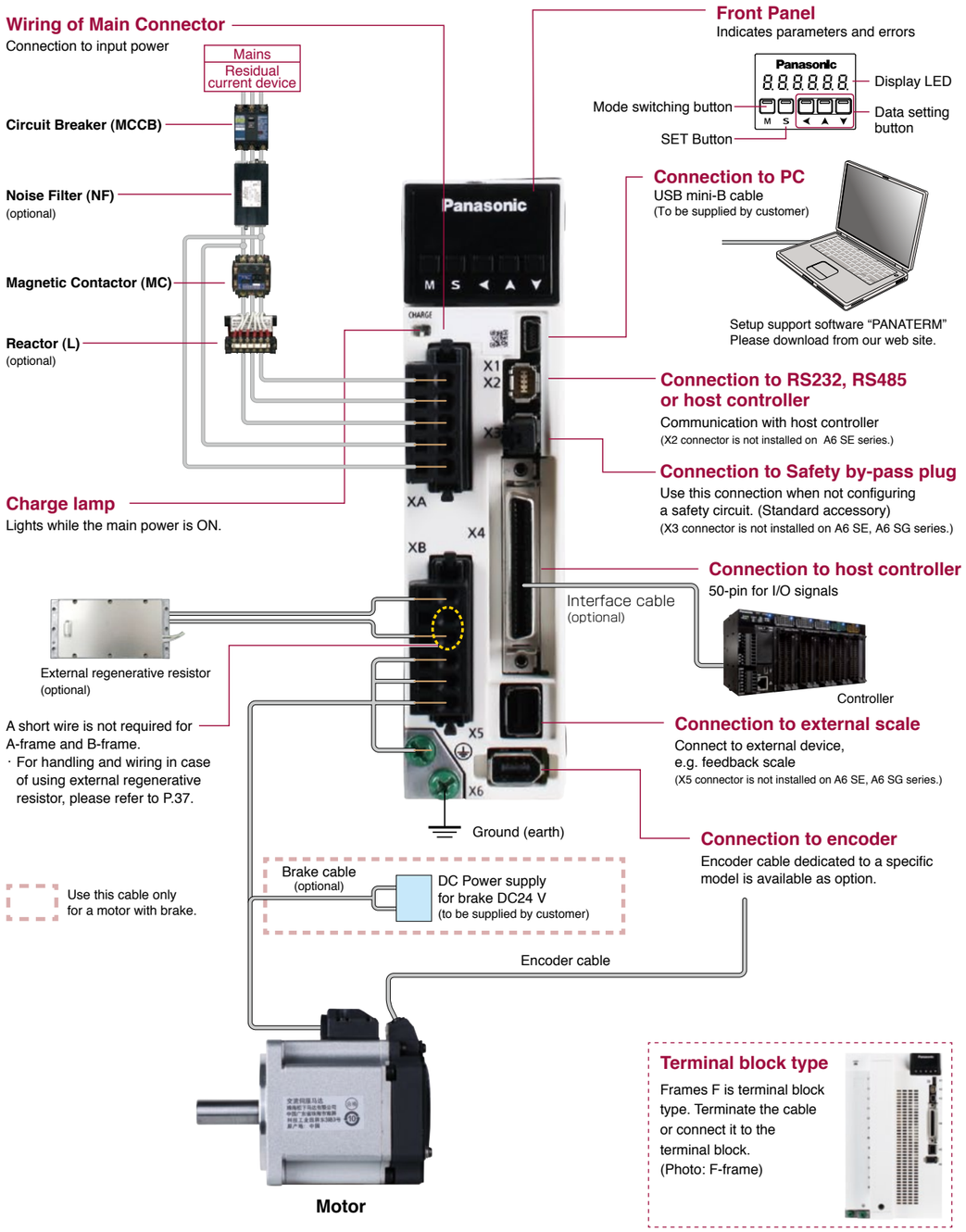

<A6 SG Series/ A6 SE Series (Driver: D-frame Motor: 1.0 kW)>

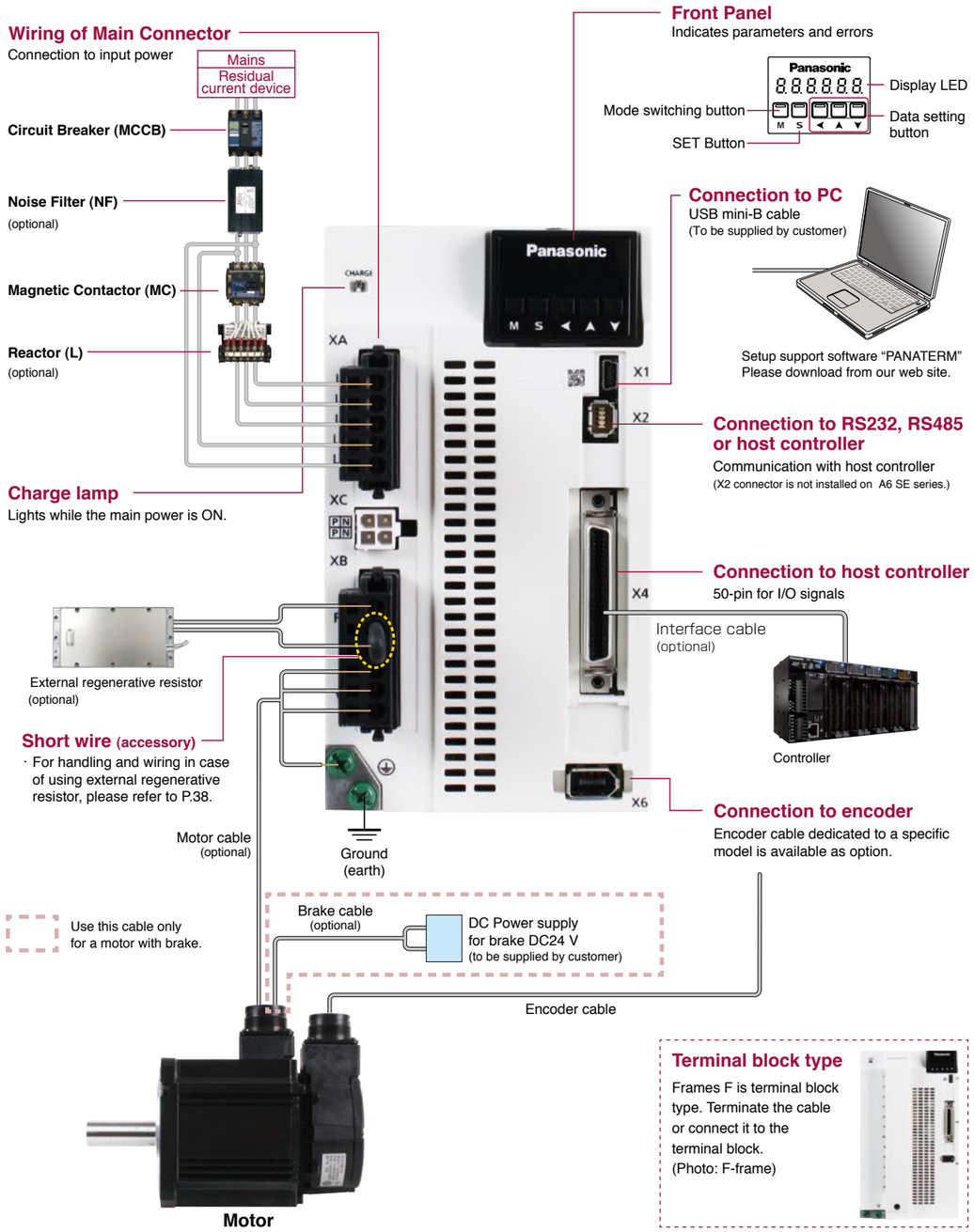

<Caution>

Apply adequate tightening torque to the product mounting screw by taking into consideration strength of the screw and the characteristics of material to which the product is installed. Overtightening can damage the screw and/or material; undertightening can result in loosening.

Example) Steel screw (M5) into steel section: 2.7 N·m to 3.3 N·m.

<Note>

Initial setup of rotational direction:
positive = CCW and negative = CW.
Pay an extra attention.

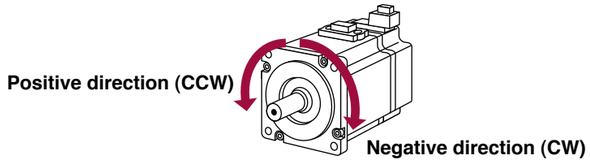

Driver and List of Applicable Peripheral Equipments

Driver	Applicable motor	Voltage (V) *1	Rated output (kW)	Required Power at the (rated load) (kVA)	Circuit breaker (rated current) (A)	Noise filter (Single phase / 3-phase)	Surge absorber (Single phase / 3-phase)	Ferite core	Rated operating current of magnetic contactor (contactor contact configuration)	Diameter and withstand voltage of main circuit cable	Crimp terminal for main circuit terminal block *2	Diameter and withstand voltage of control power supply cable	Crimp terminal for control power supply terminal block	Diameter and withstand voltage of motor cable *3	Diameter and withstand voltage of brake cable
MADL	MSMF MHMF	Single phase, 100	0.05	approx. 0.4	10	DV0P4170	DV0P4190	DV0P1460	20 A (3P+1a)	0.75 mm²/ AWG18 600 VAC or more	Connection to exclusive connector	0.75 mm²/ AWG18 600 VAC or more	Connection to exclusive connector	0.75 mm²/ AWG18 600 VAC or more	0.28 mm² to 0.75 mm²/ AWG22 to AWG18 100 VAC or more
	MSMF MQMF MHMF		0.1												
	MSMF MHMF	Single/ 3-phase 200	0.05	approx. 0.5		DV0P4170 / DV0PM20042	DV0P4190 / DV0P1450								
	MSMF MQMF MHMF		0.1, 0.2												
MBDL	MSMF MQMF MHMF	Single phase, 100	0.2			DV0P4170	DV0P4190								
		Single/ 3-phase 200	0.4	approx. 0.9		DV0P4170 / DV0PM20042	DV0P4190 / DV0P1450								
MCDL	MSMF MQMF MHMF	Single phase, 100	0.4	approx. 0.9	15	DV0PM20042	DV0P4190								
	MSMF MHMF	Single/ 3-phase 200	0.75	approx. 1.3			DV0P4190 / DV0P1450								
MDDL	MGMF	Single/ 3-phase 200	0.85	approx. 1.8	20	DV0P4220	DV0P4190 / DV0P1450		30 A (3P+1a)	2.0 mm²/ AWG14 600 VAC or more				2.0 mm²/ AWG14 600 VAC or more	0.75 mm²/ AWG18 100 VAC or more
	MSMF		1.0 (80 mm sq.)												
	MDMF MHMF		1.0												
	MHMF		1.0 (80 mm sq.)	approx. 2.3											
	MSMF		1.0												
	MGMF		1.3												
	MSMF MDMF MHMF		1.5												
MEDL	MGMF	3-phase 200	1.8	approx. 3.8	30	DV0PM20043	DV0P1450		60 A (3P+1a)						
	MSMF MDMF MHMF		2.0												
MFDL	MSMF MDMF MHMF	3-phase 200	3.0	approx. 4.5	50	DV0P3410	DV0P1450	DV0P1460 RJ8035 (Recommended component) *4							
	MGMF		2.9	approx. 7.5					100 A (3P+1a)	3.5 mm²/ AWG12 600 VAC or more	11 mm or smaller, φ5.3 Terminal block M5		11 mm or smaller, φ5.3 Terminal block M5	3.5 mm²/ AWG12 600 VAC or more	
	MSMF MDMF MHMF		4.0												
	MGMF		4.4												
	MSMF MDMF MHMF		5.0												

*1 Select peripheral equipments for single/3phase common specification according to the power source.
*2 For the ground screw, use the same crimp terminal as that for the main circuit terminal block.
*3 The diameter of the ground cable must be equal to, or larger than that of the motor cable.
*4 Use thses products to suit an international standard.

Related page

Noise filter ..... P.236 “Composition of Peripheral Equipments”
Surge absorber ..... P.237 “Composition of Peripheral Equipments”
Ferite core ..... P.238 “Composition of Peripheral Equipments”
Motor/brake connector .... P.169 “Specifications of Motor connector”

About circuit breaker and magnetic contactor

To comply to EC Directives, install a circuit breaker between the power and the noise filter without fail, and the circuit breaker should conform to IEC Standards and UL recognized (Listed and Ⓤ marked).

Suitable for use on a circuit capable of delivering not more than 5000 Arms symmetrical amperes, below the maximum input voltage of the product.

If the short-circuit current of the power supply exceeds this value, install a current limit device (current limiting fuse, current limiting circuit breaker, transformer, etc.) to limit the short-circuit current.

<Caution>

· Select a circuit breaker and noise filter which match to the capacity of power supply (including a load condition).

Terminal block and protective earth terminals

· Use a copper conductor cables with temperature rating of 75 °C or higher.
· Use the attached exclusive connector for A-frame to E-frame, and maintain the peeled off length of 8 mm to 9 mm.

■ Fastening torque list (Terminal block screw/Terminal cover fastening screw)

Driver		Terminal block screw		Terminal cover fastening screw	
Frame	Terminal name	Nominal size	Fastening torque (N·m) Note)1	Nominal size	Fastening torque (N·m) Note)1
F	L1, L2, L3, L1C, L2C, P, RB, B, N, U, V, W	M5	1.0 to 1.7	M3	0.19 to 0.21

■ Fastening torque list (Ground terminal screw/Connector to host controller [X4])

Driver frame	Ground screw		Connector to host controller (X4)	
	Nominal size	Fastening torque (N·m) Note)1	Nominal size	Fastening torque (N·m) Note)1
A to E	M4	0.7 to 0.8	M2.6	0.3 to 0.35
F	M5	1.4 to 1.6		

Note)1 **<Caution>**

· Applying fastening torque larger than the maximum value may result in damage to the product.
· Do not turn on power without tightening all terminal block screws properly, otherwise, loose contacts may generate heat (smoking, firing).

<Remarks>

· To check for looseness, conduct periodic inspection of fastening torque once a year.

80 mm sq. or less 50 W to 1000 W

MSMF, MQMF, MHMF: Leadwire type IP65

Motor						Driver				Optional parts								
Motor series		Power supply	Output (W)	Part No. Note)1	Rating/ Spec. Dimensions (page)	A6 SF series Multi fanction type (Pulse, analog, full-closed)	A6 SG series RS485 communication / A6 SE series Basic (Pulse signal input) Note)2, Note)4	Frame	Power capacity (at rated load) (kVA)	Encoder Cable Note)3 23-bit Absolute: Use in the absolute system (with battery box) Note)5	Encoder Cable Note)3 23-bit Absolute: Use in the Incremental system (without battery box)		Motor Cable Note)3: without Brake	Motor Cable Note)3: with Brake	Brake Cable Note)3	External Regenerative Resistor	Reactor (Single phase / 3-phase)	Noise Filter (Single phase / 3-phase)
Low inertia	MSMF (Leadwire type) 3000 r/min IP65	Single phase 100 V	50	MSMF5AZL1 □ 2	51	MADLT01SF	MADLN01S◇	A-frame	Approx. 0.4	MFECA 0＊＊0EAE (For fixed)	MFECA 0＊＊0EAD (For fixed)		MFMCA 0＊＊0EED		MFMCB 0＊＊0GET	DV0P4280	DV0P227	DV0P4170
			100	MSMF011L1 □ 2	53	MADLT11SF	MADLN11S◇											
			200	MSMF021L1 □ 2	55	MBDLT21SF	MBDLN21S◇	B-frame	Approx. 0.5							DV0P4283	DV0P228	
			400	MSMF041L1 □ 2	57	MCDLT31SF	MCDLN31S◇	C-frame	Approx. 0.9							DV0P4282		DV0PM20042
		Single phase/ 3-phase 200 V	50	MSMF5AZL1 □ 2	52	MADLT05SF	MADLN05S◇	A-frame	Approx. 0.5							DV0P4281	DV0P227 / DV0P220	DV0P4170 / DV0PM20042
			100	MSMF012L1 □ 2	54	MADLT05SF	MADLN05S◇											
			200	MSMF022L1 □ 2	56	MADLT15SF	MADLN15S◇									DV0P4283		
			400	MSMF042L1 □ 2	58	MBDLT25SF	MBDLN25S◇	B-frame	Approx. 0.9								DV0P228 / DV0P220	
			750	MSMF082L1 □ 2	59	MCDLT35SF	MCDLN35S◇	C-frame	Approx. 1.3									DV0PM20042
			1000	MSMF092L1 □ 2	60	MDDLT45SF	MDDLN45S◇	D-frame	Approx. 1.8							DV0P4284	DV0P228 / DV0P222	DV0P4220
Middle inertia Flat type	MQMF (Leadwire type) 3000 r/min IP65	Single phase 100 V	100	MQMF011L1 □ 2 MQMF011L1 □ 4	67	MADLT11SF	MADLN11S◇	A-frame	Approx. 0.4	MFECA 0＊＊0EAE (For fixed)	MFECA 0＊＊0EAD (For fixed)		MFMCA 0＊＊0EED		MFMCB 0＊＊0GET	DV0P4280	DV0P227	DV0P4170
			200	MQMF021L1 □ 2 MQMF021L1 □ 4	69	MBDLT21SF	MBDLN21S◇	B-frame	Approx. 0.5							DV0P4283	DV0P228	
			400	MQMF041L1 □ 2 MQMF041L1 □ 4	71	MCDLT31SF	MCDLN31S◇	C-frame	Approx. 0.9							DV0P4282		DV0PM20042
		Single phase/ 3-phase 200 V	100	MQMF012L1 □ 2 MQMF012L1 □ 4	68	MADLT05SF	MADLN05S◇	A-frame	Approx. 0.5							DV0P4281	DV0P227 / DV0P220	DV0P4170 / DV0PM20042
			200	MQMF022L1 □ 2 MQMF022L1 □ 4	70	MADLT15SF	MADLN15S◇									DV0P4283		
			400	MQMF042L1 □ 2 MQMF042L1 □ 4	72	MBDLT25SF	MBDLN25S◇	B-frame	Approx. 0.9								DV0P228 / DV0P220	
High inertia	MHMF (Leadwire type) 3000 r/min IP65	Single phase 100 V	50	MHMF5AZL1 □ 2 MHMF5AZL1 □ 4	73	MADLT01SF	MADLN01S◇	A-frame	Approx. 0.4	MFECA 0＊＊0EAE (For fixed)	MFECA 0＊＊0EAD (For fixed)		MFMCA 0＊＊0EED		MFMCB 0＊＊0GET	DV0P4280	DV0P227	DV0P4170
			100	MHMF011L1 □ 2 MHMF011L1 □ 4	75	MADLT11SF	MADLN11S◇											
			200	MHMF021L1 □ 2 MHMF021L1 □ 4	77	MBDLT21SF	MBDLN21S◇	B-frame	Approx. 0.5							DV0P4283	DV0P228	
			400	MHMF041L1 □ 2 MHMF041L1 □ 4	79	MCDLT31SF	MCDLN31S◇	C-frame	Approx. 0.9							DV0P4282		DV0PM20042
		Single phase/ 3-phase 200 V	50	MHMF5AZL1 □ 2 MHMF5AZL1 □ 4	74	MADLT05SF	MADLN05S◇	A-frame	Approx. 0.5							DV0P4281	DV0P227 / DV0P220	DV0P4170 / DV0PM20042
			100	MHMF012L1 □ 2 MHMF012L1 □ 4	76	MADLT05SF	MADLN05S◇											
			200	MHMF022L1 □ 2 MHMF022L1 □ 4	78	MADLT15SF	MADLN15S◇									DV0P4283		
			400	MHMF042L1 □ 2 MHMF042L1 □ 4	80	MBDLT25SF	MBDLN25S◇	B-frame	Approx. 0.9								DV0P228 / DV0P220	
			750	MHMF082L1 □ 2 MHMF082L1 □ 4	81	MCDLT35SF	MCDLN35S◇	C-frame	Approx. 1.3									DV0PM20042
			1000	MHMF092L1 □ 2 MHMF092L1 □ 4	82	MDDLT55SF	MDDLN55S◇	D-frame	Approx. 2.3							DV0P4284	DV0P228 / DV0P222	DV0P4220

Note)1 □ : Represents the motor specifications. (refer to “Model designation” P.18.)
Note)2 ◇ : Represents the driver specifications. (refer to “Model designation” P.18.)
Note)3 ＊＊ : Represents the cable length (03/3 m, 05/5 m, 10/10 m, 20/20 m). Example. 3 m/MFECA0030EAE
Note)4 Because A6SE series driver (dedicated for position control) does not support the absolute system specification, only incremental system can be used in combination.
Note)5 Please note that a battery is not supplied together with 23-bit absolute encoder cable (with battery box).
Please buy the battery part number “DV0P2990” separately.

■ Options

Title			Part No.	Page
Interface Cable			DV0P4360	182
Interface Conversion Cable			DV0P4120	182
			DV0P4121	182
			DV0P4130	182
			DV0P4131	182
			DV0P4132	182
Connector Kit for Power Supply Input Connection	A-frame to D-frame	Single row type	DV0PM20032	185
		Double row type	DV0PM20033	185
Connector Kit for Motor Connection	A-frame to D-frame		DV0PM20034	186
Connector Kit for Motor/Encoder Connection			DV0P4290	186
Connector Kit	RS485, RS232		DV0PM20024	183
	Safety		DV0PM20025	183
	Interface		DV0P4350	184
	External Scale		DV0PM20026	184
	Encoder		DV0PM20010	184
Battery for Absolute Encoder			DV0P2990	194
Battery Box for Absolute Encoder Note)5			DV0P4430	194
Mounting Bracket	For A-frame, B-frame		DV0PM20100	195
	For C-frame, D-frame		DV0PM20101	195
Encoder Cable	with Battery Box Note)5		MFECA0＊＊0EAE	171
	without Battery Box		MFECA0＊＊0EAD	171
Motor Cable	without Brake		MFMCA0＊＊0EED	175
Brake Cable			MFMCB0＊＊0GET	181
External regenerative resistor	50 Ω 25 W		DV0P4280	197
	100 Ω 25 W		DV0P4281	197
	25 Ω 50 W		DV0P4282	197
	50 Ω 50 W		DV0P4283	197
	30 Ω 100 W		DV0P4284	197
Reactor			DV0P220	196
			DV0P222	196
			DV0P227	196
			DV0P228	196
Noise Filter			DV0P4170	236
			DV0PM20042	236
			DV0P4220	236
Surge Absorber			DV0P4190	237
			DV0P1450	237
Ferite Core			DV0P1460	238

80 mm sq. or less 50 W to 1000 W

MSMF, MQMF: Connector type IP67

Motor						Driver				Optional parts								
Motor series		Power supply	Output (W)	Part No. Note)1	Rating/ Spec. Dimensions (page)	A6 SF series Multi fanction type (Pulse, analog, full-closed)	A6 SG series RS485 communication / A6 SE series Basic (Pulse signal input) Note)2, Note)5	Frame	Power capacity (at rated load) (kVA)	Encoder Cable Note)3 23-bit Absolute: Use in the absolute system (with battery box) Note)6	Encoder Cable Note)3 23-bit Absolute: Use in the Incremental system (without battery box)		Motor Cable Note)3: without Brake	Motor Cable Note)3: with Brake	Brake Cable Note)3	External Regenerative Resistor	Reactor (Single phase / 3-phase)	Noise Filter (Single phase / 3-phase)
Low inertia	MSMF (Connector type) 3000 r/min IP67	Single phase 100 V	50	MSMF5AZL1 □ 1	51 100	MADLT01SF	MADLN01S◇	A-frame	Approx. 0.4	MFECA 0∗∗0MJE (For movable, direction of motor shaft)	MFECA 0∗∗0MJD (For movable, direction of motor shaft)		MFMCA 0∗∗0NJD (For movable, direction of motor shaft)		MFMCB 0∗∗0PJT (For movable, direction of motor shaft)	DV0P4280	DV0P227	DV0P4170
			100	MSMF011L1 □ 1	53 100	MADLT11SF	MADLN11S◇											
			200	MSMF021L1 □ 1	55 100	MBDLT21SF	MBDLN21S◇	B-frame	Approx. 0.5							DV0P4283	DV0P228	
			400	MSMF041L1 □ 1	57 101	MCDLT31SF	MCDLN31S◇	C-frame	Approx. 0.9							DV0P4282		DV0PM20042
		Single phase/ 3-phase 200 V	50	MSMF5AZL1 □ 1	52 100	MADLT05SF	MADLN05S◇	A-frame	Approx. 0.5	MFECA 0∗∗0MKE (For movable, opposite direction of motor shaft)	MFECA 0∗∗0MKD (For movable, opposite direction of motor shaft)		MFMCA 0∗∗0NKD (For movable, opposite direction of motor shaft)		MFMCB 0∗∗0PKT (For movable, opposite direction of motor shaft)	DV0P4281	DV0P227 / DV0P220	DV0P4170 / DV0PM20042
			100	MSMF012L1 □ 1	54 100	MADLT05SF	MADLN05S◇			MFECA 0∗∗0TJE (For fixed, direction of motor shaft)	MFECA 0∗∗0TJD (For fixed, direction of motor shaft)		MFMCA 0∗∗0RJD (For fixed, direction of motor shaft)		MFMCB 0∗∗0SJT (For fixed, direction of motor shaft)			
			200	MSMF022L1 □ 1	56 100	MADLT15SF	MADLN15S◇			MFECA 0∗∗0TKE (For fixed, opposite direction of motor shaft)	MFECA 0∗∗0TKD (For fixed, opposite direction of motor shaft)		MFMCA 0∗∗0RKD (For fixed, opposite direction of motor shaft) Note)4		MFMCB 0∗∗0SKT (For fixed, opposite direction of motor shaft)	DV0P4283		
			400	MSMF042L1 □ 1	58 101	MBDLT25SF	MBDLN25S◇	B-frame	Approx. 0.9								DV0P228 / DV0P220	
			750	MSMF082L1 □ 1	59 101	MCDLT35SF	MCDLN35S◇	C-frame	Approx. 1.3									DV0PM20042
			1000	MSMF092L1 □ 1	60 101	MDDLT45SF	MDDLN45S◇	D-frame	Approx. 1.8							DV0P4284	DV0P228 / DV0P222	DV0P4220
Middle inertia Flat type	MQMF (Connector type) 3000 r/min IP67	Single phase 100 V	100	MQMF011L1 □ 1 MQMF011L1 □ 3	67 104	MADLT11SF	MADLN11S◇	A-frame	Approx. 0.4	MFECA 0∗∗0MJE (For movable, direction of motor shaft)	MFECA 0∗∗0MJD (For movable, direction of motor shaft)		MFMCA 0∗∗0UFD (For movable, direction of motor shaft)	MFMCA 0∗∗0VFD (For movable, direction of motor shaft)	–	DV0P4280	DV0P227	DV0P4170
			200	MQMF021L1 □ 1 MQMF021L1 □ 3	69 104	MBDLT21SF	MBDLN21S◇	B-frame	Approx. 0.5							DV0P4283	DV0P228	
			400	MQMF041L1 □ 1 MQMF041L1 □ 3	71 105	MCDLT31SF	MCDLN31S◇	C-frame	Approx. 0.9	MFECA 0∗∗0MKE (For movable, opposite direction of motor shaft)	MFECA 0∗∗0MKD (For movable, opposite direction of motor shaft)		MFMCA 0∗∗0UGD (For movable, opposite direction of motor shaft)	MFMCA 0∗∗0VGD (For movable, opposite direction of motor shaft)		DV0P4282		DV0PM20042
		Single phase/ 3-phase 200 V	100	MQMF012L1 □ 1 MQMF012L1 □ 3	68 104	MADLT05SF	MADLN05S◇	A-frame	Approx. 0.5	MFECA 0∗∗0TJE (For fixed, direction of motor shaft)	MFECA 0∗∗0TJD (For fixed, direction of motor shaft)		MFMCA 0∗∗0WFD (For fixed, direction of motor shaft)	MFMCA 0∗∗0XFD (For fixed, direction of motor shaft)		DV0P4281	DV0P227 / DV0P220	DV0P4170 / DV0PM20042
			200	MQMF022L1 □ 1 MQMF022L1 □ 3	70 104	MADLT15SF	MADLN15S◇			MFECA 0∗∗0TKE (For fixed, opposite direction of motor shaft)	MFECA 0∗∗0TKD (For fixed, opposite direction of motor shaft)		MFMCA 0∗∗0WGD (For fixed, opposite direction of motor shaft)	MFMCA 0∗∗0XGD (For fixed, opposite direction of motor shaft)		DV0P4283		
			400	MQMF042L1 □ 1 MQMF042L1 □ 3	72 105	MBDLT25SF	MBDLN25S◇	B-frame	Approx. 0.9								DV0P228 / DV0P220	

Note)1 □ : Represents the motor specifications. (refer to “Model designation” P.18.)
Note)2 ◇ : Represents the driver specifications. (refer to “Model designation” P.18.)
Note)3 ∗∗ : Represents the cable length (03/3 m, 05/5 m, 10/10 m, 20/20 m). Example. 3 m/MFECA0030MJE
Note)4 Cables for opposite to output shaft cannot be used with 50 W or 100 W motor. (MSMF connector type only.)
Note)5 Because A6SE series driver (dedicated for position control) does not support the absolute system specification, only incremental system can be used in combination.
Note)6 Please note that a battery is not supplied together with 23-bit absolute encoder cable (with battery box). Please buy the battery part number “DV0P2990” separately.

[Movable : For application where the cable is movable.
Fixed : For application where the cable is fixed.
Direction of motor shaft/Opposite direction of motor shaft : Cable direction]

■ Options

Title			Part No.	Page
Interface Cable			DV0P4360	182
Interface Conversion Cable			DV0P4120	182
			DV0P4121	182
			DV0P4130	182
			DV0P4131	182
			DV0P4132	182
Connector Kit for Power Supply Input Connection	A-frame to D-frame	Single row type	DV0PM20032	185
		Double row type	DV0PM20033	185
Connector Kit for Motor Connection	A-frame to D-frame		DV0PM20034	186
Connector Kit for Motor/ Encoder Connection	MSMF		DV0PM20035	187
	MQMF		DV0PM24582	188
Connector Kit for Brake Connection			DV0PM20040	193
Connector Kit	RS485, RS232		DV0PM20024	183
	Safety		DV0PM20025	183
	Interface		DV0P4350	184
	External Scale		DV0PM20026	184
	Encoder		DV0PM20010	184
Battery for Absolute Encoder			DV0P2990	194
Battery Box for Absolute Encoder Note)6			DV0P4430	194
Mounting Bracket	For A-frame,B-frame		DV0PM20100	195
	For C-frame,D-frame		DV0PM20101	195
Encoder Cable (with Battery Box) Note)6	For movable, direction of motor shaft		MFECA0∗∗0MJE	172
	For movable, opposite direction of motor shaft		MFECA0∗∗0MKE	172
	For fixed, direction of motor shaft		MFECA0∗∗0TJE	172
	For fixed, opposite direction of motor shaft		MFECA0∗∗0TKE	172
Encoder Cable (without Battery Box)	For movable, direction of motor shaft		MFECA0∗∗0MJD	172
	For movable, opposite direction of motor shaft		MFECA0∗∗0MKD	172
	For fixed, direction of motor shaft		MFECA0∗∗0TJD	172
	For fixed, opposite direction of motor shaft		MFECA0∗∗0TKD	172
Motor Cable (For MSMF type)	For movable, direction of motor shaft		MFMCA0∗∗0NJD	175
	For movable, opposite direction of motor shaft		MFMCA0∗∗0NKD	175
	For fixed, direction of motor shaft		MFMCA0∗∗0RJD	175
	For fixed, opposite direction of motor shaft		MFMCA0∗∗0RKD	175
Motor Cable (For MQMF type) (without Brake)	For movable, direction of motor shaft		MFMCA0∗∗0UFD	176
	For movable, opposite direction of motor shaft		MFMCA0∗∗0UGD	176
	For fixed, direction of motor shaft		MFMCA0∗∗0WFD	176
	For fixed, opposite direction of motor shaft		MFMCA0∗∗0WGD	176
Motor Cable (For MQMF type) (with Brake)	For movable, direction of motor shaft		MFMCA0∗∗0VFD	178
	For movable, opposite direction of motor shaft		MFMCA0∗∗0VGD	178
	For fixed, direction of motor shaft		MFMCA0∗∗0XFD	178
	For fixed, opposite direction of motor shaft		MFMCA0∗∗0XGD	178
Brake Cable	For movable, direction of motor shaft		MFMCB0∗∗0PJT	181
	For movable, opposite direction of motor shaft		MFMCB0∗∗0PKT	181
	For fixed, direction of motor shaft		MFMCB0∗∗0SJT	181
	For fixed, opposite direction of motor shaft		MFMCB0∗∗0SKT	181
External regenerative resistor	50 Ω 25 W		DV0P4280	197
	100 Ω 25 W		DV0P4281	197
	25 Ω 50 W		DV0P4282	197
	50 Ω 50 W		DV0P4283	197
	30 Ω 100 W		DV0P4284	197
Reactor			DV0P220, DV0P222 DV0P227, DV0P228	196
Noise Filter			DV0P4170, DV0PM20042 DV0P4220	236
Surge Absorber			DV0P4190, DV0P1450	237
Ferite Core			DV0P1460	238

80 mm sq. or less 50 W to 1000 W

MHMF: Connector type IP67

Motor						Driver				Optional parts								
Motor series		Power supply	Output (W)	Part No. Note)1	Rating/ Spec. Dimensions (page)	A6 SF series Multi fanction type (Pulse, analog, full-closed)	A6 SG series RS485 communication / A6 SE series Basic (Pulse signal input) Note)2, Note)4	Frame	Power capacity (at rated load) (kVA)	Encoder Cable Note)3 23-bit Absolute: Use in the absolute system (with battery box) Note)5	Encoder Cable Note)3 23-bit Absolute: Use in the Incremental system (without battery box)		Motor Cable Note)3: without Brake	Motor Cable Note)3: with Brake	Brake Cable Note)3	External Regenerative Resistor	Reactor (Single phase / 3-phase)	Noise Filter (Single phase / 3-phase)
High Inertia	MHMF (Connector type) 3000 r/min IP67	Single phase 100 V	50	MHMF5AZL1 □ 1 MHMF5AZL1 □ 3	73 109	MADLT01SF	MADLN01S◇	A-frame	Approx. 0.4	MFECA 0∗∗0MJE (For movable, direction of motor shaft) MFECA 0∗∗0MKE (For movable, opposite direction of motor shaft) MFECA 0∗∗0TJE (For fixed, direction of motor shaft) MFECA 0∗∗0TKE (For fixed, opposite direction of motor shaft)	MFECA 0∗∗0MJD (For movable, direction of motor shaft) MFECA 0∗∗0MKD (For movable, opposite direction of motor shaft) MFECA 0∗∗0TJD (For fixed, direction of motor shaft) MFECA 0∗∗0TKD (For fixed, opposite direction of motor shaft)		MFMCA 0∗∗7UFD (Movable/fixed common-use, direction of motor shaft) MFMCA 0∗∗7UGD (Movable/fixed common-use, opposite direction of motor shaft)	MFMCA 0∗∗7VFD (Movable/fixed common-use, direction of motor shaft) MFMCA 0∗∗7VGD (Movable/fixed common-use, opposite direction of motor shaft)	–	DV0P4280	DV0P227	DV0P4170
			100	MHMF011L1 □ 1 MHMF011L1 □ 3	75 109	MADLT11SF	MADLN11S◇											
			200	MHMF021L1 □ 1 MHMF021L1 □ 3	77 110	MBDLT21SF	MBDLN21S◇	B-frame	Approx. 0.5				MFMCA 0∗∗0UFD (For movable, direction of motor shaft) MFMCA 0∗∗0UGD (For movable, opposite direction of motor shaft) MFMCA 0∗∗0WFD (For fixed, direction of motor shaft) MFMCA 0∗∗0WGD (For fixed, opposite direction of motor shaft)	MFMCA 0∗∗0VFD (For movable, direction of motor shaft) MFMCA 0∗∗0VGD (For movable, opposite direction of motor shaft) MFMCA 0∗∗0XFD (For fixed, direction of motor shaft) MFMCA 0∗∗0XGD (For fixed, opposite direction of motor shaft)		DV0P4283	DV0P228	
			400	MHMF041L1 □ 1 MHMF041L1 □ 3	79 110	MCDLT31SF	MCDLN31S◇	C-frame	Approx. 0.9							DV0P4282		DV0PM20042
		Single phase/ 3-phase 200 V	50	MHMF5AZL1 □ 1 MHMF5AZL1 □ 3	74 109	MADLT05SF	MADLN05S◇	A-frame	Approx. 0.5				MFMCA 0∗∗7UFD (Movable/fixed common-use, direction of motor shaft) MFMCA 0∗∗7UGD (Movable/fixed common-use, opposite direction of motor shaft)	MFMCA 0∗∗7VFD (Movable/fixed common-use, direction of motor shaft) MFMCA 0∗∗7VGD (Movable/fixed common-use, opposite direction of motor shaft)		DV0P4281	DV0P227 / DV0P220	DV0P4170 / DV0PM20042
			100	MHMF012L1 □ 1 MHMF012L1 □ 3	76 109	MADLT05SF	MADLN05S◇											
			200	MHMF022L1 □ 1 MHMF022L1 □ 3	78 110	MADLT15SF	MADLN15S◇						MFMCA 0∗∗0UFD (For movable, direction of motor shaft) MFMCA 0∗∗0UGD (For movable, opposite direction of motor shaft) MFMCA 0∗∗0WFD (For fixed, direction of motor shaft) MFMCA 0∗∗0WGD (For fixed, opposite direction of motor shaft)	MFMCA 0∗∗0VFD (For movable, direction of motor shaft) MFMCA 0∗∗0VGD (For movable, opposite direction of motor shaft) MFMCA 0∗∗0XFD (For fixed, direction of motor shaft) MFMCA 0∗∗0XGD (For fixed, opposite direction of motor shaft)		DV0P4283	DV0P228 / DV0P220	
			400	MHMF042L1 □ 1 MHMF042L1 □ 3	80 110	MBDLT25SF	MBDLN25S◇	B-frame	Approx. 0.9									
			750	MHMF082L1 □ 1 MHMF082L1 □ 3	81 111	MCDLT35SF	MCDLN35S◇	C-frame	Approx. 1.3									DV0PM20042
			1000	MHMF092L1 □ 1 MHMF092L1 □ 3	82 111	MDDLT55SF	MDDLN55S◇	D-frame	Approx. 2.3							DV0P4284	DV0P228 / DV0P222	DV0P4220

Note)1 □ : Represents the motor specifications. (refer to "Model designation" P.18.)
Note)2 ◇ : Represents the driver specifications. (refer to "Model designation" P.18.)
Note)3 ∗∗ : Represents the cable length (03/3 m, 05/5 m, 10/10 m, 20/20 m). Example. 3 m/MFECA0030MJE
Note)4 Because A6SE series driver (dedicated for position control) does not support the absolute system specification, only incremental system can be used in combination.
Note)5 Please note that a battery is not supplied together with 23-bit absolute encoder cable (with battery box). Please buy the battery part number "DV0P2990" separately.

[Movable : For application where the cable is movable.
Fixed : For application where the cable is fixed.
Direction of motor shaft/Opposite direction of motor shaft : Cable direction]

■ Options

Title			Part No.	Page
Interface Cable			DV0P4360	182
Interface Conversion Cable			DV0P4120	182
			DV0P4121	182
			DV0P4130	182
			DV0P4131	182
			DV0P4132	182
Connector Kit for Power Supply Input Connection	A-frame to D-frame	Single row type	DV0PM20032	185
		Double row type	DV0PM20033	185
Connector Kit for Motor Connection	A-frame to D-frame		DV0PM20034	186
Connector Kit for Motor/ Encoder Connection	MHMF 200 W to 1.0 kW		DV0PM24582	188
	MHMF 50 W, 100 W		DV0PM24581	188
Connector Kit for Brake Connection			DV0PM20040	193
Connector Kit	RS485, RS232		DV0PM20024	183
	Safety		DV0PM20025	183
	Interface		DV0P4350	184
	External Scale		DV0PM20026	184
	Encoder		DV0PM20010	184
Battery for Absolute Encoder			DV0P2990	194
Battery Box for Absolute Encoder Note)5			DV0P4430	194
Mounting Bracket	For A-frame,B-frame		DV0PM20100	195
	For C-frame,D-frame		DV0PM20101	195
Encoder Cable (with Battery Box) Note)5	For movable, direction of motor shaft		MFECA0∗∗0MJE	172
	For movable, opposite direction of motor shaft		MFECA0∗∗0MKE	172
	For fixed, direction of motor shaft		MFECA0∗∗0TJE	172
	For fixed, opposite direction of motor shaft		MFECA0∗∗0TKE	172
Encoder Cable (without Battery Box)	For movable, direction of motor shaft		MFECA0∗∗0MJD	172
	For movable, opposite direction of motor shaft		MFECA0∗∗0MKD	172
	For fixed, direction of motor shaft		MFECA0∗∗0TJD	172
	For fixed, opposite direction of motor shaft		MFECA0∗∗0TKD	172
Motor Cable (For MHMF 200 W to 1.0 kW) (without Brake)	For movable, direction of motor shaft		MFMCA0∗∗0UFD	176
	For movable, opposite direction of motor shaft		MFMCA0∗∗0UGD	176
	For fixed, direction of motor shaft		MFMCA0∗∗0WFD	176
	For fixed, opposite direction of motor shaft		MFMCA0∗∗0WGD	176
Motor Cable (For MHMF 200 W to 1.0 kW) (with Brake)	For movable, direction of motor shaft		MFMCA0∗∗0VFD	178
	For movable, opposite direction of motor shaft		MFMCA0∗∗0VGD	178
	For fixed, direction of motor shaft		MFMCA0∗∗0XFD	178
	For fixed, opposite direction of motor shaft		MFMCA0∗∗0XGD	178
Motor Cable (For MHMF 50 W, 100 W) (without Brake)	Movable/fixed common-use, direction of motor shaft		MFMCA0∗∗7UFD	175
	Movable/fixed common-use, opposite direction of motor shaft		MFMCA0∗∗7UGD	175
Motor Cable (For MHMF 50 W, 100 W) (with Brake)	Movable/fixed common-use, direction of motor shaft		MFMCA0∗∗7VFD	178
	Movable/fixed common-use, opposite direction of motor shaft		MFMCA0∗∗7VGD	178
External regenerative resistor	50 Ω 25 W		DV0P4280	197
	100 Ω 25 W		DV0P4281	197
	25 Ω 50 W		DV0P4282	197
	50 Ω 50 W		DV0P4283	197
	30 Ω 100 W		DV0P4284	197
Reactor			DV0P220, DV0P222 DV0P227, DV0P228	196
Noise Filter			DV0P4170, DV0PM20042 DV0P4220	236
Surge Absorber			DV0P4190, DV0P1450	237
Ferite Core			DV0P1460	238

100 mm sq. or more 0.85 kW to 5.0 kW

IP67 motor Encorder connector (Large size JL10) type

Motor						Driver				Optional parts							
Motor series		Power supply	Output (W)	Part No. Note)1	Rating/ Spec. Dimensions (page)	A6 SF series Multi fanction type (Pulse, analog, full-closed)	A6 SG series RS485 communication / A6 SE series Basic (Pulse signal input) Note)2, Note)4	Frame	Power capacity (at rated load) (kVA)	Encoder Cable Note)3,5 JL10 (Large size) (One-touch lock type / N/MS screwed type) 23-bit Absolute: Use in the absolute system (with battery box) Note)7	Encoder Cable: Use in the Incremental system (without battery box)		Motor Cable Note)3,5 JL10 (One-touch lock type / JL04 screwed type): without Brake	Motor Cable: with Brake	External Regenerative Resistor	Reactor (Single phase / 3-phase)	Noise Filter
Low inertia	MSMF Large size JL10 type 3000 r/min IP67	Single phase/ 3-phase 200 V	1000	MSMF102L1 □ 6 MSMF102L1 □ 8	61	MDDLT55SF	MDDLN55S◇	D-frame	Approx. 2.3	MFECA 0＊＊0EPE / MFECA 0＊＊0ESE	MFECA 0＊＊0EPD / MFECA 0＊＊0ESD		MFMCD 0＊＊2EUD / MFMCD 0＊＊2ECD	MFMCA 0＊＊2FUD / MFMCA 0＊＊2FCD	DV0P4284	DV0P228 / DV0P222	DV0P4220
			1500	MSMF152L1 □ 6 MSMF152L1 □ 8	62	MDDLT55SF	MDDLN55S◇									DV0P20047 / DV0P222	
		3-phase 200 V	2000	MSMF202L1 □ 6 MSMF202L1 □ 8	63	MEDLT83SF	MEDLN83S◇	E-frame	Approx. 3.8						DV0P4285 Note)6	DV0P223	DV0PM20043
			3000	MSMF302L1 □ 6 MSMF302L1 □ 8	64	MFDLTA3SF	MFDLNA3S◇	F-frame	Approx. 4.5				MFMCA 0＊＊3EUT / MFMCA 0＊＊3ECT	MFMCA 0＊＊3FUT / MFMCA 0＊＊3FCT	DV0P4285 ×2 in parallel	DV0P224	DV0P3410
			4000	MSMF402L1 □ 6 MSMF402L1 □ 8	65	MFDLTB3SF	MFDLNB3S◇		Approx. 7.5							DV0P225	
			5000	MSMF502L1 □ 6 MSMF502L1 □ 8	66	MFDLTB3SF	MFDLNB3S◇										
Middle inertia	MDMF Large size JL10 type 2000 r/min IP67	Single phase/ 3-phase 200 V	1000	MDMF102L1 □ 6 MDMF102L1 □ 8	89	MDDLT45SF	MDDLN45S◇	D-frame	Approx. 1.8	MFECA 0＊＊0EPE / MFECA 0＊＊0ESE	MFECA 0＊＊0EPD / MFECA 0＊＊0ESD		MFMCD 0＊＊2EUD / MFMCD 0＊＊2ECD	MFMCA 0＊＊2FUD / MFMCA 0＊＊2FCD	DV0P4284	DV0P228 / DV0P222	DV0P4220
			1500	MDMF152L1 □ 6 MDMF152L1 □ 8	90	MDDLT55SF	MDDLN55S◇		Approx. 2.3							DV0P20047 / DV0P222	
		3-phase 200 V	2000	MDMF202L1 □ 6 MDMF202L1 □ 8	91	MEDLT83SF	MEDLN83S◇	E-frame	Approx. 3.8						DV0P4285 Note)6	DV0P223	DV0PM20043
			3000	MDMF302L1 □ 6 MDMF302L1 □ 8	92	MFDLTA3SF	MFDLNA3S◇	F-frame	Approx. 4.5				MFMCA 0＊＊3EUT / MFMCA 0＊＊3ECT	MFMCA 0＊＊3FUT / MFMCA 0＊＊3FCT	DV0P4285 ×2 in parallel	DV0P224	DV0P3410
			4000	MDMF402L1 □ 6 MDMF402L1 □ 8	93	MFDLTB3SF	MFDLNB3S◇		Approx. 7.5							DV0P225	
			5000	MDMF502L1 □ 6 MDMF502L1 □ 8	94	MFDLTB3SF	MFDLNB3S◇										
	MGMF Large size JL10 type (Low speed/ High torque type) 1500 r/min IP67	Single phase/ 3-phase 200 V	850	MGMF092L1 □ 6 MGMF092L1 □ 8	95	MDDLT45SF	MDDLN45S◇	D-frame	Approx. 1.8	MFECA 0＊＊0EPE / MFECA 0＊＊0ESE	MFECA 0＊＊0EPD / MFECA 0＊＊0ESD		MFMCD 0＊＊2EUD / MFMCD 0＊＊2ECD	MFMCA 0＊＊2FUD / MFMCA 0＊＊2FCD	DV0P4284	DV0P228 / DV0P221	DV0P4220
			1300	MGMF132L1 □ 6 MGMF132L1 □ 8	96	MDDLT55SF	MDDLN55S◇		Approx. 2.3							DV0P20047 / DV0P222	
		3-phase 200 V	1800	MGMF182L1 □ 6 MGMF182L1 □ 8	97	MEDLT83SF	MEDLN83S◇	E-frame	Approx. 3.8						DV0P4285	DV0P223	DV0PM20043
			2900	MGMF292L1 □ 6 MGMF292L1 □ 8	98	MFDLTB3SF	MFDLNB3S◇	F-frame	Approx. 7.5				MFMCA 0＊＊3EUT / MFMCA 0＊＊3ECT	MFMCA 0＊＊3FUT / MFMCA 0＊＊3FCT	DV0P4285 ×2 in parallel	DV0P224	DV0P3410
			4400	MGMF442L1 □ 6 MGMF442L1 □ 8	99	MFDLTB3SF	MFDLNB3S◇									DV0P225	
High inertia	MHMF Large size JL10 type 2000 r/min IP67	Single phase/ 3-phase 200 V	1000	MHMF102L1 □ 6 MHMF102L1 □ 8	83	MDDLT45SF	MDDLN45S◇	D-frame	Approx. 1.8	MFECA 0＊＊0EPE / MFECA 0＊＊0ESE	MFECA 0＊＊0EPD / MFECA 0＊＊0ESD		MFMCD 0＊＊2EUD / MFMCD 0＊＊2ECD	MFMCA 0＊＊2FUD / MFMCA 0＊＊2FCD	DV0P4284	DV0P228 / DV0P222	DV0P4220
			1500	MHMF152L1 □ 6 MHMF152L1 □ 8	84	MDDLT55SF	MDDLN55S◇		Approx. 2.3							DV0P20047 / DV0P222	
		3-phase 200 V	2000	MHMF202L1 □ 6 MHMF202L1 □ 8	85	MEDLT83SF	MEDLN83S◇	E-frame	Approx. 3.8				MFMCE 0＊＊2EUD / MFMCE 0＊＊2ECD	MFMCE 0＊＊2FUD / MFMCE 0＊＊2FCD	DV0P4285 Note)6	DV0P223	DV0PM20043
			3000	MHMF302L1 □ 6 MHMF302L1 □ 8	86	MFDLTA3SF	MFDLNA3S◇	F-frame	Approx. 4.5				MFMCA 0＊＊3EUT / MFMCA 0＊＊3ECT	MFMCA 0＊＊3FUT / MFMCA 0＊＊3FCT	DV0P4285 ×2 in parallel	DV0P224	DV0P3410
			4000	MHMF402L1 □ 6 MHMF402L1 □ 8	87	MFDLTB3SF	MFDLNB3S◇		Approx. 7.5							DV0P225	
			5000	MHMF502L1 □ 6 MHMF502L1 □ 8	88	MFDLTB3SF	MFDLNB3S◇										

Note)1 □ : Represents the motor specifications. (refer to “Model designation” P.18.)
Note)2 ◇ : Represents the driver specifications. (refer to “Model designation” P.18.)
Note)3 ＊＊ : Represents the cable length (03/3 m, 05/5 m, 10/10 m, 20/20 m). Example. 3 m/MFECA0030EPE
Note)4 Because A6SE series driver (dedicated for position control) does not support the absolute system specification, only incremental system can be used in combination.
Note)5 Use of JL10 type encoder cables and motor cables enable one-touch lock connections. Conventional screwed type N/MS and JL04V type cables can also be used.
Note)6 For other possible combinations, refer to P.197.
Note)7 Please note that a battery is not supplied together with 23-bit absolute encoder cable (with battery box). Please buy the battery part number “DV0P2990” separately.

■ Options

Title			Part No.	Page
Interface Cable			DV0P4360	182
Interface Conversion Cable			DV0P4120	182
			DV0P4121	182
			DV0P4130	182
			DV0P4131	182
			DV0P4132	182
Connector Kit for Power Supply Input Connection	A-frame to D-frame	Single row type	DV0PM20032	185
		Double row type	DV0PM20033	185
	E-frame		DV0PM20044	185
Connector Kit for Motor Connection	A-frame to D-frame		DV0PM20034	186
	E-frame		DV0PM20046	186
Connector Kit for Regenera-tive Resistor	E-frame		DV0PM20045	185
Connector Kit for Motor/ Encoder Con-nection	without Brake		DV0PM24587 MSMF 1.0 kW to 2.0 kW MDMF 1.0 kW to 2.0 kW MGMF 0.85 kW to 1.8 kW MHMF 1.0 kW, 1.5 kW	189
			DV0PM24588 MSMF 3.0 kW to 5.0 kW MDMF 3.0 kW to 5.0 kW MGMF 2.9 kW, 4.4 kW MHMF 2.0 kW to 5.0 kW	190
	with Brake		DV0PM24589 MSMF 1.0 kW to 2.0 kW MDMF 1.0 kW to 2.0 kW MGMF 0.85 kW to 1.8 kW MHMF 1.0 kW, 1.5 kW	189
			DV0PM24590 MSMF 3.0 kW to 5.0 kW MDMF 3.0 kW to 5.0 kW MGMF 2.9 kW, 4.4 kW MHMF 2.0 kW to 5.0 kW	190
Connector Kit	RS485, RS232		DV0PM20024	183
	Safety		DV0PM20025	183
	Interface		DV0P4350	184
	External Scale		DV0PM20026	184
	Encoder		DV0PM20010	184
Battery for Absolute Encoder			DV0P2990	194
Battery Box for Absolute Encoder Note)7			DV0P4430	194
Mounting Bracket	D-frame		DV0PM20101	195
Encoder Cable (with Battery Box) Note)7	One-touch lock type		MFECA0＊＊0EPE	173
	Screwed type		MFECA0＊＊0ESE	174
Encoder Cable (without Battery Box)	One-touch lock type		MFECA0＊＊0EPD	173
	Screwed type		MFECA0＊＊0ESD	173
Motor Cable (without Brake)	One-touch lock type		MFMCD0＊＊2EUD	176
	Screwed type		MFMCD0＊＊2ECD	176
	One-touch lock type		MFMCE0＊＊2EUD	177
	Screwed type		MFMCE0＊＊2ECD	177
	One-touch lock type		MFMCA0＊＊3EUT	177
	Screwed type		MFMCA0＊＊3ECT	177
Motor Cable (with Brake)	One-touch lock type		MFMCA0＊＊2FUD	179
	Screwed type		MFMCA0＊＊2FCD	179
	One-touch lock type		MFMCE0＊＊2FUD	179
	Screwed type		MFMCE0＊＊2FCD	180
	One-touch lock type		MFMCA0＊＊3FUT	180
	Screwed type		MFMCA0＊＊3FCT	180
External regenerative resistor	30 Ω 100 W 20 Ω 130 W		DV0P4284 DV0P4285	197
Reactor			DV0P222, DV0P223 DV0P224, DV0P225 DV0P228, DV0PM20047	196
Noise Filter			DV0P4220, DV0PM20043 DV0P3410	236
Surge Absorber			DV0P4190, DV0P1450	237
Ferite Core			DV0P1460	238

100 mm sq. or more 0.85 kW to 5.0 kW

IP67 motor Encorder connector (Small size JN2) type

Motor						Driver				Optional parts							
Motor series		Power supply	Output (W)	Part No. Note)1	Rating/ Spec. Dimensions (page)	A6 SF series Multi fanction type (Pulse, analog, full-closed)	A6 SG series RS485 communication / A6 SE series Basic (Pulse signal input) Note)2, Note)4	Frame	Power capacity (at rated load) (kVA)	Encoder Cable Note)3 JN2 (Small size) (One-touch lock type) 23-bit Absolute: Use in the absolute system (with battery box) Note)7	Encoder Cable Note)3 JN2 (Small size) (One-touch lock type) 23-bit Absolute: Use in the Incremental system (without battery box)		Motor Cable Note)3,5 JL10 (One-touch lock type / JL04 screwed type): without Brake	Motor Cable Note)3,5 JL10 (One-touch lock type / JL04 screwed type): with Brake	External Regenerative Resistor	Reactor (Single phase / 3-phase)	Noise Filter
Low inertia	MSMF Small size JN2 type 3000 r/min IP67	Single phase/ 3-phase 200 V	1000	MSMF102L1 □ 5 MSMF102L1 □ 7	61 102	MDDLT55SF	MDDLN55S◇	D-frame	Approx. 2.3	MFECA 0∗∗0ETE	MFECA 0∗∗0ETD		MFMCD 0∗∗2EUD / MFMCD 0∗∗2ECD	MFMCA 0∗∗2FUD / MFMCA 0∗∗2FCD	DV0P4284	DV0P228 / DV0P222	DV0P4220
			1500	MSMF152L1 □ 5 MSMF152L1 □ 7	62 102	MDDLT55SF	MDDLN55S◇									DV0PM20047 / DV0P222	
		3-phase 200 V	2000	MSMF202L1 □ 5 MSMF202L1 □ 7	63 102	MEDLT83SF	MEDLN83S◇	E-frame	Approx. 3.8						DV0P4285 Note)6	DV0PM20223	DV0PM20043
			3000	MSMF302L1 □ 5 MSMF302L1 □ 7	64 102	MFDLTA3SF	MFDLNA3S◇	F-frame	Approx. 4.5				MFMCA 0∗∗3EUT / MFMCA 0∗∗3ECT	MFMCA 0∗∗3FUT / MFMCA 0∗∗3FCT	DV0P4285 ×2 in parallel	DV0P224	DV0P3410
			4000	MSMF402L1 □ 5 MSMF402L1 □ 7	65 102	MFDLTB3SF	MFDLNB3S◇		Approx. 7.5							DV0P225	
			5000	MSMF502L1 □ 5 MSMF502L1 □ 7	66 102	MFDLTB3SF	MFDLNB3S◇										
Middle inertia	MDMF Small size JN2 type 2000 r/min IP67	Single phase/ 3-phase 200 V	1000	MDMF102L1 □ 5 MDMF102L1 □ 7	89 113	MDDLT45SF	MDDLN45S◇	D-frame	Approx. 1.8	MFECA 0∗∗0ETE	MFECA 0∗∗0ETD		MFMCD 0∗∗2EUD / MFMCD 0∗∗2ECD	MFMCA 0∗∗2FUD / MFMCA 0∗∗2FCD	DV0P4284	DV0P228 / DV0P222	DV0P4220
			1500	MDMF152L1 □ 5 MDMF152L1 □ 7	90 113	MDDLT55SF	MDDLN55S◇		Approx. 2.3							DV0PM20047 / DV0P222	
		3-phase 200 V	2000	MDMF202L1 □ 5 MDMF202L1 □ 7	91 113	MEDLT83SF	MEDLN83S◇	E-frame	Approx. 3.8						DV0P4285 Note)6	DV0PM20223	DV0PM20043
			3000	MDMF302L1 □ 5 MDMF302L1 □ 7	92 113	MFDLTA3SF	MFDLNA3S◇	F-frame	Approx. 4.5				MFMCA 0∗∗3EUT / MFMCA 0∗∗3ECT	MFMCA 0∗∗3FUT / MFMCA 0∗∗3FCT	DV0P4285 ×2 in parallel	DV0P224	DV0P3410
			4000	MDMF402L1 □ 5 MDMF402L1 □ 7	93 113	MFDLTB3SF	MFDLNB3S◇		Approx. 7.5							DV0P225	
			5000	MDMF502L1 □ 5 MDMF502L1 □ 7	94 113	MFDLTB3SF	MFDLNB3S◇										
	MGMF Small size JN2 type (Low speed/ High torque type) 1500 r/min IP67	Single phase/ 3-phase 200 V	850	MGMF092L1 □ 5 MGMF092L1 □ 7	95 114	MDDLT45SF	MDDLN45S◇	D-frame	Approx. 1.8	MFECA 0∗∗0ETE	MFECA 0∗∗0ETD		MFMCD 0∗∗2EUD / MFMCD 0∗∗2ECD	MFMCA 0∗∗2FUD / MFMCA 0∗∗2FCD	DV0P4284	DV0P228 / DV0P221	DV0P4220
			1300	MGMF132L1 □ 5 MGMF132L1 □ 7	96 114	MDDLT55SF	MDDLN55S◇		Approx. 2.3							DV0PM20047 / DV0P222	
		3-phase 200 V	1800	MGMF182L1 □ 5 MGMF182L1 □ 7	97 114	MEDLT83SF	MEDLN83S◇	E-frame	Approx. 3.8						DV0P4285	DV0P223	DV0PM20043
			2900	MGMF292L1 □ 5 MGMF292L1 □ 7	98 114	MFDLTB3SF	MFDLNB3S◇	F-frame	Approx. 7.5				MFMCA 0∗∗3EUT / MFMCA 0∗∗3ECT	MFMCA 0∗∗3FUT / MFMCA 0∗∗3FCT	DV0P4285 ×2 in parallel	DV0P224	DV0P3410
			4400	MGMF442L1 □ 5 MGMF442L1 □ 7	99 114	MFDLTB3SF	MFDLNB3S◇									DV0P225	
High inertia	MHMF Small size JN2 type 2000 r/min IP67	Single phase/ 3-phase 200 V	1000	MHMF102L1 □ 5 MHMF102L1 □ 7	83 112	MDDLT45SF	MDDLN45S◇	D-frame	Approx. 1.8	MFECA 0∗∗0ETE	MFECA 0∗∗0ETD		MFMCD 0∗∗2EUD / MFMCD 0∗∗2ECD	MFMCA 0∗∗2FUD / MFMCA 0∗∗2FCD	DV0P4284	DV0P228 / DV0P222	DV0P4220
			1500	MHMF152L1 □ 5 MHMF152L1 □ 7	84 112	MDDLT55SF	MDDLN55S◇		Approx. 2.3							DV0PM20047 / DV0P222	
		3-phase 200 V	2000	MHMF202L1 □ 5 MHMF202L1 □ 7	85 112	MEDLT83SF	MEDLN83S◇	E-frame	Approx. 3.8				MFMCE 0∗∗2EUD / MFMCE 0∗∗2ECD	MFMCE 0∗∗2FUD / MFMCE 0∗∗2FCD	DV0P4285 Note)6	DV0P223	DV0PM20043
			3000	MHMF302L1 □ 5 MHMF302L1 □ 7	86 112	MFDLTA3SF	MFDLNA3S◇	F-frame	Approx. 4.5				MFMCA 0∗∗3EUT / MFMCA 0∗∗3ECT	MFMCA 0∗∗3FUT / MFMCA 0∗∗3FCT	DV0P4285 ×2 in parallel	DV0P224	DV0P3410
			4000	MHMF402L1 □ 5 MHMF402L1 □ 7	87 112	MFDLTB3SF	MFDLNB3S◇		Approx. 7.5							DV0P225	
			5000	MHMF502L1 □ 5 MHMF502L1 □ 7	88 112	MFDLTB3SF	MFDLNB3S◇										

Note)1 □ : Represents the motor specifications. (refer to "Model designation" P.18.)
Note)2 ◇ : Represents the driver specifications. (refer to "Model designation" P.18.)
Note)3 ∗∗ : Represents the cable length (03/3 m, 05/5 m, 10/10 m, 20/20 m). Example. 3 m/MFECA0030ETE
Note)4 Because A6SE series driver (dedicated for position control) does not support the absolute system specification, only incremental system can be used in combination.
Note)5 Use of JL10 type motor cables enable one-touch lock connections. Conventional screwed type JL04V type cables can also be used.
Note)6 For other possible combinations, refer to P.197.
Note)7 Please note that a battery is not supplied together with 23-bit absolute encoder cable (with battery box). Please buy the battery part number "DV0P2990" separately.

■ Options

Title			Part No.	Page
Interface Cable			DV0P4360	182
Interface Conversion Cable			DV0P4120	182
			DV0P4121	182
			DV0P4130	182
			DV0P4131	182
			DV0P4132	182
Connector Kit for Power Supply Input Connection	A-frame to D-frame	Single row type	DV0PM20032	185
		Double row type	DV0PM20033	185
	E-frame		DV0PM20044	185
Connector Kit for Motor Connection	A-frame to D-frame		DV0PM20034	186
	E-frame		DV0PM20046	186
Connector Kit for Regenera-tive Resistor	E-frame		DV0PM20045	185
Connector Kit for Motor/ Encoder Con-nection	without Brake		DV0PM24583 MSMF 1.0 kW to 2.0 kW MDMF 1.0 kW to 2.0 kW MGMF 0.85 kW to 1.8 kW MHMF 1.0 kW, 1.5 kW	189
			DV0PM24584 MSMF 3.0 kW to 5.0 kW MDMF 3.0 kW to 5.0 kW MGMF 2.9 kW, 4.4 kW MHMF 2.0 kW to 5.0 kW	190
	with Brake		DV0PM24585 MSMF 1.0 kW to 2.0 kW MDMF 1.0 kW to 2.0 kW MGMF 0.85 kW to 1.8 kW MHMF 1.0 kW, 1.5 kW	189
			DV0PM24586 MSMF 3.0 kW to 5.0 kW MDMF 3.0 kW to 5.0 kW MGMF 2.9 kW, 4.4 kW MHMF 2.0 kW to 5.0 kW	190
Connector Kit	RS485, RS232		DV0PM20024	183
	Safety		DV0PM20025	183
	Interface		DV0P4350	184
	External Scale		DV0PM20026	184
	Encoder		DV0PM20010	184
Battery for Absolute Encoder			DV0P2990	194
Battery Box for Absolute Encoder Note)7			DV0P4430	194
Mounting Bracket	D-frame		DV0PM20101	195
Encoder Cable (with Battery Box) Note)7	One-touch lock type		MFECA0∗∗0ETE	174
Encoder Cable (without Battery Box)	One-touch lock type		MFECA0∗∗0ETD	174
Motor Cable (without Brake)	One-touch lock type		MFMCD0∗∗2EUD	176
	Screwed type		MFMCD0∗∗2ECD	176
	One-touch lock type		MFMCE0∗∗2EUD	177
	Screwed type		MFMCE0∗∗2ECD	177
	One-touch lock type		MFMCA0∗∗3EUT	177
	Screwed type		MFMCA0∗∗3ECT	177
Motor Cable (with Brake)	One-touch lock type		MFMCA0∗∗2FUD	179
	Screwed type		MFMCA0∗∗2FCD	179
	One-touch lock type		MFMCE0∗∗2FUD	179
	Screwed type		MFMCE0∗∗2FCD	180
	One-touch lock type		MFMCA0∗∗3FUT	180
	Screwed type		MFMCA0∗∗3FCT	180
External regenerative resistor	30 Ω 100 W 20 Ω 130 W		DV0P4284 DV0P4285	197
Reactor			DV0P222, DV0P223 DV0P224, DV0P225 DV0P228, DV0PM20047	196
Noise Filter			DV0P4220, DV0PM20043 DV0P3410	236
Surge Absorber			DV0P4190, DV0P1450	237
Ferite Core			DV0P1460	238

A6 SF series (Multifanction type) Position, Speed, Torque, Full-closed type

Basic Specifications	Input power	100 V	Main circuit	Single phase 100 V +10 % –15 % to 120 V +10 % –15 % 50 Hz / 60 Hz
			Control circuit	Single phase 100 V +10 % –15 % to 120 V +10 % –15 % 50 Hz / 60 Hz
		200 V	Main circuit: A-frame to D-frame	Single/3-phase 200 V +10 % –15 % to 240 V +10 % –15 % 50 Hz / 60 Hz
			Main circuit: E-frame, F-frame	Single/3-phase 200 V +10 % –15 % to 240 V +10 % –15 % 50 Hz / 60 Hz
			Control circuit: A-frame to D-frame	Single phase 200 V +10 % –15 % to 240 V +10 % –15 % 50 Hz / 60 Hz
			Control circuit: E-frame, F-frame	Single phase 200 V +10 % –15 % to 240 V +10 % –15 % 50 Hz / 60 Hz
	Environment		temperature	Ambient temperature: 0 ˚C to 55 ˚C (free from freezing) Storage temperature: –20 ˚C to 65 ˚C (Max.temperature guarantee: 80 ˚C for 72 hours free from condensation*1)
			humidity	Both operating and storage : 20 % to 85 %RH (free from condensation*1)
			Altitude	Lower than 1000 m
			Vibration	5.88 m/s² or less, 10 Hz to 60 Hz
	Control method			IGBT PWM Sinusoidal wave drive
	Encoder feedback			23-bit (8388608 resolution) absolute encoder, 7-wire serial * When using the product as an incremental system (not using multi-turn data), do not connect a battery for absolute encoder. Instead, set the parameter Pr0.15 to [1] (default).
	External scale feedback			A/B phase, initialization signal defferential input. Manufacturers that support serial communication scale: Fagor Automation S.Coop., Magnescale Co., Ltd., Mitutoyo Corporation Nidec Sankyo Corporation, Renishaw plc
	Parallel I/O connector	Control signal	Input	General purpose 10 inputs The function of general-purpose input is selected by parameters.
			Output	General purpose 6 outputs The function of general-purpose output is selected by parameters.
		Analog signal	Input	3 inputs (16-bit A/D : 1 input, 12-bit A/D : 2 inputs)
			Output	2 outputs (Analog monitor: 2 output)
		Pulse signal	Input	2 inputs (Photo-coupler input, Line receiver input) Both open collector and line driver interface can be connected. High speed line driver interface can be connected.
			Output	4 outputs (Line driver: 3 output, open collector: 1 output) Line driver output for encoder pulses (A/B/Z signal) or external feedback pulses (EXA/EXB/EXZ signal) open collector output also available for Z or EXZ signal.
	Communication function		USB	USB interface to connect to computers for parameter setting or status monitoring.
			RS232	1:1 communication
			RS485	1: n communication (max 31)
	Safety function			A dedicated connector is provided for Functional Safety.
	Front panel			(1) 5 keys (2) LED (6-digit)
	Regeneration			A-frame, B,-frame: no built-in regenerative resistor (external resistor only) C-frame to F-frame: Built-in regenerative resistor (external resistor is also enabled.)
	Dynamic brake			A-frame to F-frame: Built-in
	Control mode			Switching among the following 7 mode is enabled, (1) Position control (2) Speed control (3) Toque control (4) Position/Speed control (5) Position/Torque control (6) Speed/Torque control (7) Full-closed control

*1 Air containing water vapor will become saturated with water vapor as the temperature falls, causing dew.

Function	Control input		(1) servo-ON input (2) Alarm clear input (3) Gain switch input (4) Positive direction drive inhibit input (5) Negative direction drive inhibit input (6) Forced alarm input (7) Inertia ratio switch input
	Control output		(1) Servo-alarm output (2) Servo-ready output (3) External brake off output (4) At-speed output (5) Torque in-limit output (6) Zero speed detection output (7) Warning output (8) Alarm clear attribute output (9) Servo on status output
	Position control	Control input	(1) Deviation counter clear input (2) Command pulse inhibit input (3) Command division/multiplication switch input (4) Anti-vibration switch input (5) Torque limit switch input (6) Control mode switch input
		Control output	(1) In-position output (2) Position command ON/OFF output
		Pulse input: Max. command pulse frequency	500 kpps (Optocoupler interface), 8 Mpps (When using line receiver input multiplied by 4)
		Pulse input: Input pulse signal format	Differential input. Selectable by parameter. ([1]Positive/Negative pulse [2]A/B quadrature [3]Pulse/Direction)
		Pulse input: Electronic gear (Division/Multiplication of command pulse)	Applicable scaling ratio: 1/1000 times to 8000 times Any value of 1 - 2^{30} can be set for both numerator (which corresponds to encoder resolution) and denominator (which corresponds to command pulse resolution per motor revolution), but the combination has to be within the range shown above.
		Pulse input: Smoothing filter	Primary delay filter or FIR type filter is adaptable to the command input
		Analog input: Torque limit command input	Individual torque limit for both positive and negative direction is enabled.
		Analog input: Torque feed forward input	Analog voltage can be used as torque feed forward input.
		Two-degree-of-freedom control	Available
		Anti-vibration control	Available
		Load variation suppression function	Available
	Speed control	Control input	(1) Internal command velocity selection input (2) Speed zero clamp input (3) Velocity command sign input (4) Control mode switch input
		Control output	(1) Speed coincidence output (2) Velocity command ON/OFF output
		Analog input: Velocity command input	Velocity command input with analog voltage is possible. Scale setting and command polarity vary depending on parameters. (6 V/Rated rotational speed: Default)
		Analog input: Torque limit command input	Individual torque limit for both positive and negative direction is enabled.
		Analog input: Torque feed forward input	Analog voltage can be used as torque feed forward input.
		Internal velocity command	Switching the internal 8 speed is enabled by command input.
		Soft-start/down function	Individual setup of acceleration and deceleration is enabled, with 0 s to 10 s/1000 r/min. Sigmoid acceleration/deceleration is also enabled.
		Speed zero clamp	Internal velocity command can be clamped to 0 with speed zero clamp input.
		Two-degree-of-freedom control	Available
	Torque control	Control input	Speed zero clamp input, torque command sign input, control mode switch input.
		Control output	(1) Speed coincidence output (2) Speed in-limit output
		Analog input: Torque command input	Torque command input with analog voltage is possible. Scale setting and command polarity vary depending on parameters. (3 V/rated torque Default)
		Speed limit function	Speed limit value with parameter is enabled.
	Full-closed control	Control input	(1) Deviation counter clear input (2) Command pulse inhibit input (3) Command division/multiplication switch input (4) Anti-vibration switch input (5) Torque limit switch input
		Control output	(1) In-position output (2) Position command ON/OFF output
		Pulse input: Max. command pulse frequency	500 kpps (Optocoupler interface), 8 Mpps (When using line receiver input multiplied by 4)
		Pulse input: Input pulse signal format	Differential input. Selectable by parameter. ([1]Positive/Negative pulse [2]A/B quadrature [3]Pulse/Direction)
		Pulse input: Electronic gear (Division/Multiplication of command pulse)	Applicable scaling ratio: 1/1000 times to 8000 times Any value of 1 - 2^{30} can be set for both numerator (which corresponds to encoder resolution) and denominator (which corresponds to command pulse resolution per motor revolution), but the combination has to be within the range shown above.
		Pulse input: Smoothing filter	Primary delay filter or FIR type filter is adaptable to the command input
		Analog input: Torque limit command input	Individual torque limit for both positive and negative direction is enabled.
		Analog input: Torque feed forward input	Analog voltage can be used as torque feed forward input.
		Setting range of external scale division/multiplication	1/40 times to 1280 times Although ratio of the encoder pulse (numerator) and external scale pulse (denominator) can be arbitrarily set in the range of 1 to 2^{23} for the numerator and in the range of 1 to 2^{23} for the denominator, this product should be used within the aforementioned range.
		Two-degree-of-freedom control	Available
		Anti-vibration control	Available
	Common	Auto tuning	The load inertia is identified in real time by the driving state of the motor operating according to the command given by the controlling device and set up support software "PANATERM". The gain is set automatically in accordance with the rigidity setting.
		Division of encoder feedback pulse	Set up of any value is enabled (encoder pulses count is the max.).
		Protective function: Hard error	Over-voltage, under-voltage, over-speed, over-load, over-heat, over-current and encoder error etc.
		Protective function: Soft error	Excess position deviation, command pulse division error, EEPROM error etc.
		Alarm data trace back	Tracing back of alarm data is available

A6 SG series (RS485 communication type)
A6 SE series (Besic type)
Position control only type

Basic Specifications	Input power	100 V	Main circuit		Single phase 100 V +10 % –15 % to 120 V +10 % –15 % 50 Hz / 60 Hz
			Control circuit		Single phase 100 V +10 % –15 % to 120 V +10 % –15 % 50 Hz / 60 Hz
		200 V	Main circuit	A-frame to D-frame	Single/3-phase 200 V +10 % –15 % to 240 V +10 % –15 % 50 Hz / 60 Hz
				E-frame to F-frame	Single/3-phase 200 V +10 % –15 % to 240 V +10 % –15 % 50 Hz / 60 Hz
			Control circuit	A-frame to D-frame	Single phase 200 V +10 % –15 % to 240 V +10 % –15 % 50 Hz / 60 Hz
				E-frame to F-frame	Single phase 200 V +10 % –15 % to 240 V +10 % –15 % 50 Hz / 60 Hz
	Environment		temperature		Ambient temperature: 0 ˚C to 55 ˚C (free from freezing) Storage temperature: –20 ˚C to 65 ˚C (Max.temperature guarantee: 80 ˚C for 72 hours free from condensation*1)
			humidity		Both operating and storage : 20 % to 85 %RH (free from condensation*1)
			Altitude		Lower than 1000 m
			Vibration		5.88 m/s^2 or less, 10 Hz to 60 Hz
	Control method				IGBT PWM Sinusoidal wave drive
	Encoder feedback				23-bit (8388608 resolution) absolute encoder, 7-wire serial * When using the product as an incremental system (not using multi-turn data), do not connect a battery for absolute encoder. Instead, set the parameter Pr0.15 to [1] (default).
	Parallel I/O connector	Control signal		Input	General purpose 10 inputs The function of general-purpose input is selected by parameters.
				Output	General purpose 6 outputs The function of general-purpose input is selected by parameters.
		Analog signal		Input	None
				Output	2 outputs (Analog monitor: 2 output)
		Pulse signal		Input	2 inputs (Photo-coupler input, Line receiver input)
				Output	4 outputs (Line driver: 3 output, open collector: 1 output)
	Communication function			USB	USB interface to connect to computers for parameter setting or status monitoring.
				RS232	1:1 communication * RS485, RS232 connector is not installed on A6 SE series.
				RS485	1: n communication (max 31)
	Front panel				(1) 5 keys (2) LED (6-digit)
	Regeneration				A-frame, B,-frame: no built-in regenerative resistor (external resistor only) C-frame to F-frame: Built-in regenerative resistor (external resistor is also enabled.)
	Dynamic brake				Built-in
	Control mode				(1) Position control (2) Internal velocity command (3) Position/Internal velocity command

*1 Air containing water vapor will become saturated with water vapor as the temperature falls, causing dew.

Function	Position control	Control input		(1) servo-ON input (2) Alarm clear input (3) Gain switch input (4) Positive direction drive inhibit input ect.
		Control output		In-Position output etc.
		Pulse input	Max. command pulse frequency	500 kpps (Optocoupler interface) 8 Mpps (Line receiver interface)
			Input pulse signal format	Differential input. Selectable by parameter. ([1]Positive/Negative pulse [2]A/B quadrature [3]Pulse/Direction)
			Electronic gear (Division/Multiplication of command pulse)	Applicable scaling ratio: 1/1000 times to 8000 times Any value of 1 - 2^{30} can be set for both numerator (which corresponds to encoder resolution) and denominator (which corresponds to command pulse resolution per motor revolution), but the combination has to be within the range shown above.
			Smoothing filter	Primary delay filter or FIR type filter is adaptable to the command input
		Anti-vibration control		Available
		Two-degree-of-freedom control		Available
	Speed control	Control input		Internal command speed selections 1-3, speed-zero clamp, etc.
		Control output		At speed etc.
		Internal velocity command		Switching the internal 8 speed is enabled by command input.
		Soft-start/down function		Individual setup of acceleration and deceleration is enabled, with 0 s to 10 s/1000 r/min. Sigmoid acceleration/deceleration is also enabled.
		Zero-speed clamp		Internal velocity command can be clamped to 0 with speed zero clamp input.
		Two-degree-of-freedom control		Available
	Common	Auto tuning		The load inertia is identified in real time by the driving state of the motor operating according to the command given by the controlling device and set up support software “PANATERM”. The gain is set automatically in accordance with the rigidity setting.
		Division of encoder feedback pulse		Set up of any value is enabled (encoder pulses count is the max.).
		Protective function	Hard error	Over-voltage, under-voltage, over-speed, over-load, over-heat, over-current and encoder error etc.
			Soft error	Excess position deviation, command pulse division error, EEPROM error etc.
		Alarm data trace back		Tracing back of alarm data is available

Wiring to Connector, XA, XB, XC and Terminal Block

In Case of Single phase, A-frame, B-frame, 100 V / 200 V type

● In Case of Leadwire type

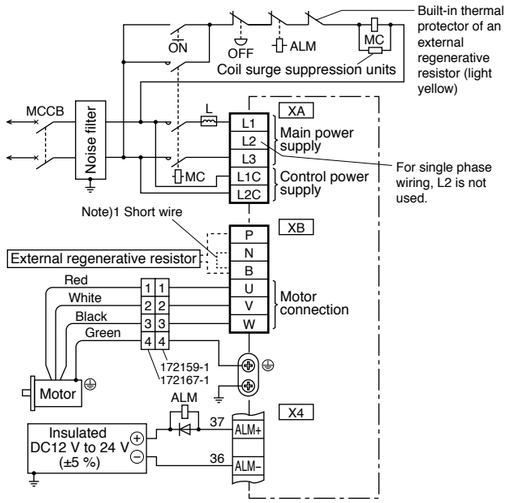

● In Case of Connector type

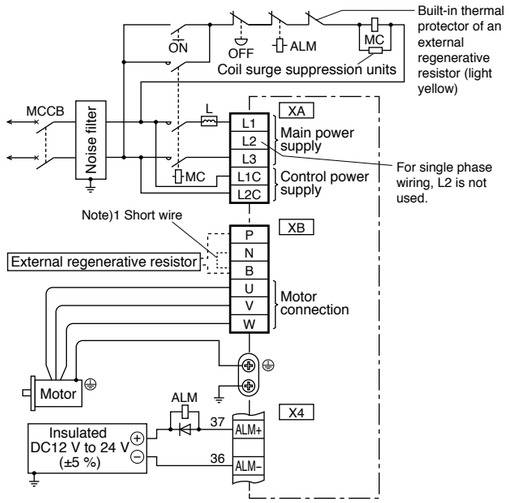

In Case of 3-phase, A-frame, B-frame, 200 V type

● In Case of Leadwire type

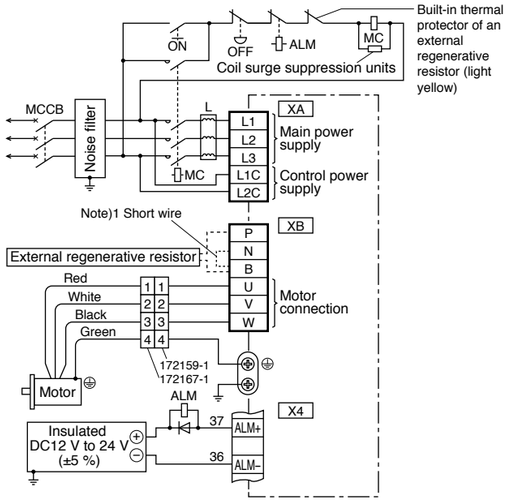

● In Case of Connector type

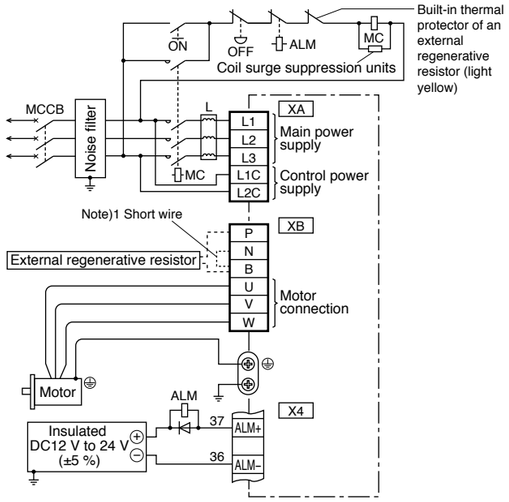

Note)1

Frame No.	Short wire (Accessory)	Built-in regenerative resistor	Connection of the connector XB	
			In case of using an external regenerative resistor	In case of not using an external regenerative resistor
A-frame B-frame	without	without	• Connect an external regenerative resistor between P-B.	• Always open between P-B.

*** Refer to P.169, P.170, Specifications of Motor connector.**

In Case of Single phase, C-frame, D-frame, 100 V / 200 V type

● In Case of Leadwire type

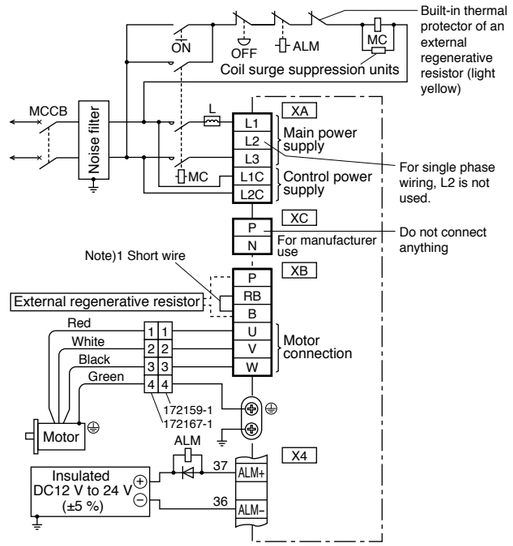

● In Case of Connector type

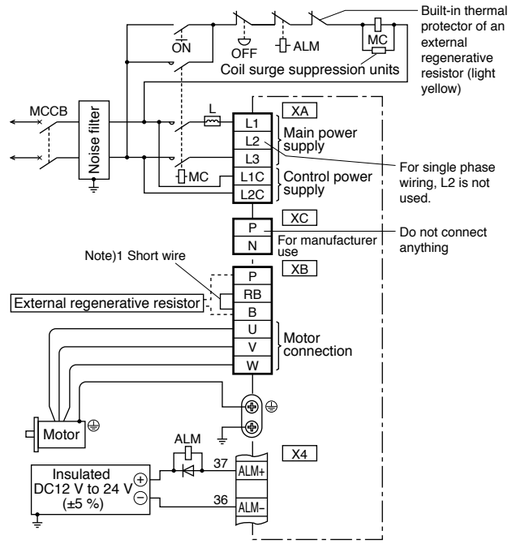

In Case of 3-phase, C-frame, D-frame, 200 V type

● In Case of Leadwire type

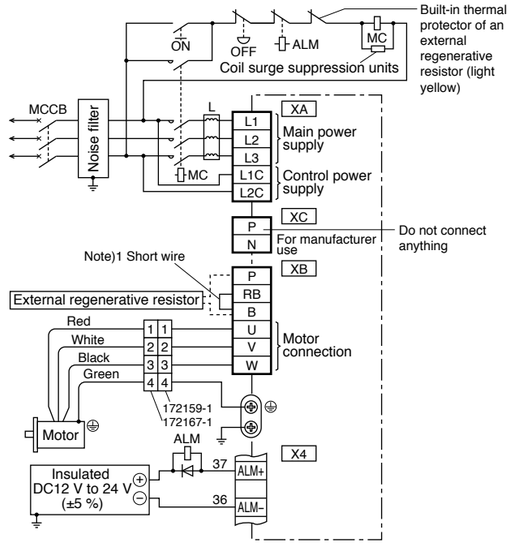

● In Case of Connector type

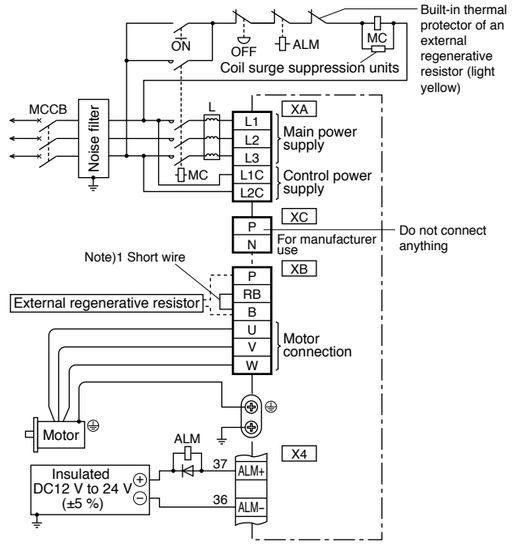

Note)1

Frame No.	Short wire (Accessory)	Built-in regenerative resistor	Connection of the connector XB	
			In case of using an external regenerative resistor	In case of not using an external regenerative resistor
C-frame D-frame	with	with	• Remove the short wire accessory from between RB-B. • Connect an external regenerative resistor between P-B.	• Shorted between RB-B with an attached short wire

*** Refer to P.169, P.170, Specifications of Motor connector.**

Wiring to Connector, XA, XB, XC and Terminal Block

In Case of 3-phase, E-frame, 200 V type

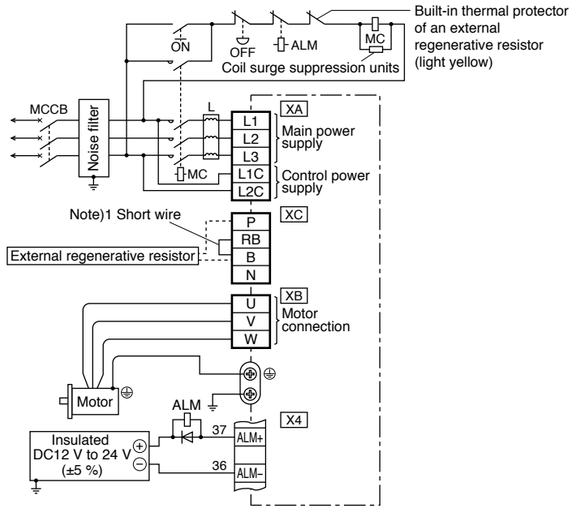

Note)1

Frame No.	Short wire (Accessory)	Built-in regenerative resistor	Connection of the connector XC	
			In case of using an external regenerative resistor	In case of not using an external regenerative resistor
E-frame	with	with	• Remove the short wire accessory from between RB-B. • Connect an external regenerative resistor between P-B.	• Shorted between RB-B with an attached short wire

*** Refer to P.170, Specifications of Motor connector.**

In Case of 3-phase, F-frame, 200 V type

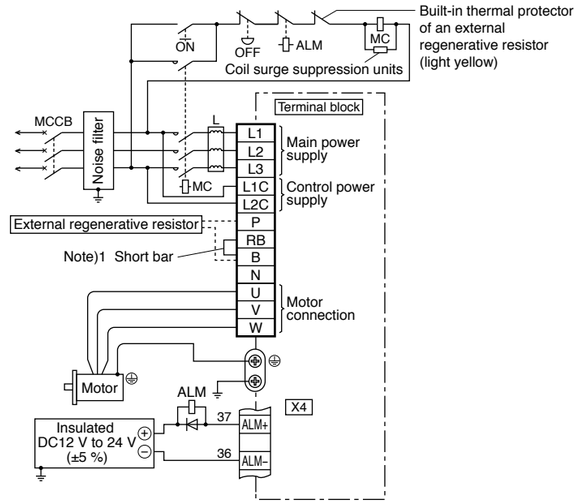

Note)1

Frame No.	Short bar (Accessory)	Built-in regenerative resistor	Connection of terminal block	
			In case of using an external regenerative resistor	In case of not using an external regenerative resistor
F-frame	with	with	• Remove the short bar accessory from between RB-B. • Connect an external regenerative resistor between P-B.	• Shorted between RB-B with an attached short bar

*** Refer to P.170, Specifications of Motor connector.**

Wiring to the Connector, X3

* Excluding A6 SE, A6 SG Series

Connecting the host controller can configure a safety circuit that controls the safety functions.

When not constructing the safety circuit, use the supplied safety bypass plug.

Outline Description of Safe Torque Off (STO)

The safe torque off (STO) function is a safety function that shuts the motor current and turns off motor output torque by forcibly turning off the driving signal of the servo driver internal power transistor. For this purpose, the STO uses safety input signal and hardware (circuit).

When STO function operates, the servo driver turns off the servo ready output signal (S-RDY) and enters STO state. When the driver becomes STO state, front panel displays the “St.”. Then, when the driver's state is STO input is off and servo-on input is off, the driver automatically becomes servo-off.

Safety Precautions

- When using the STO function, be sure to perform equipment risk assessment to ensure that the system conforms to the safety requirements.
- Even while the STO function is working, the following potential safety hazards exist. Check safety in risk assessment.
  - The motor may move when external force (e.g. gravity force on vertical axis) is exerted on it. Provide an external brake, etc., as necessary to secure the motor. Note that the purpose of motor with brake is holding and it cannot be used for braking application.
  - When parameter Pr5.10 Sequence at alarm is set to free run (disable dynamic brake), the motor is free run state and requires longer stop distance even if no external force is applied. Make sure that this does not cause any problem.
  - When power transistor, etc., becomes defective, the motor will move to the extent equivalent of 180 electrical angle (max.). Make sure that this does not cause any problem.
  - The STO turns off the current to the motor but does not turn off power to the servo driver and does not isolate it. When starting maintenance service on the servo driver, turn off the driver by using a different disconnecting device.
- External device monitor (EDM) output signal is not a safety signal. Do not use it for an application other than failure monitoring.
- Dynamic brake and external brake release signal output are not related to safety function. When designing the system, make sure that the failure of external brake release during STO condition does not result in danger condition.
- When using STO function, connect equipment conforming to the safety standards.

[Connector pin assignment]
(Viewed from cable)

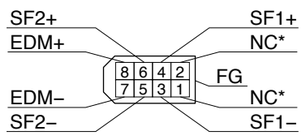

* Do not connect anything to NC.

- System configuration

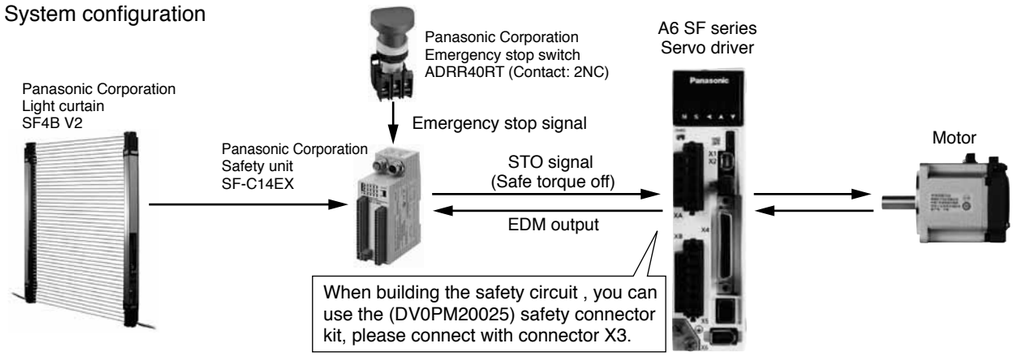

Panasonic Corporation Automotive & Industrial Systems Company http://panasonic.net/id/

Wiring to the Connector, X4

Wiring Example of Position Control Mode

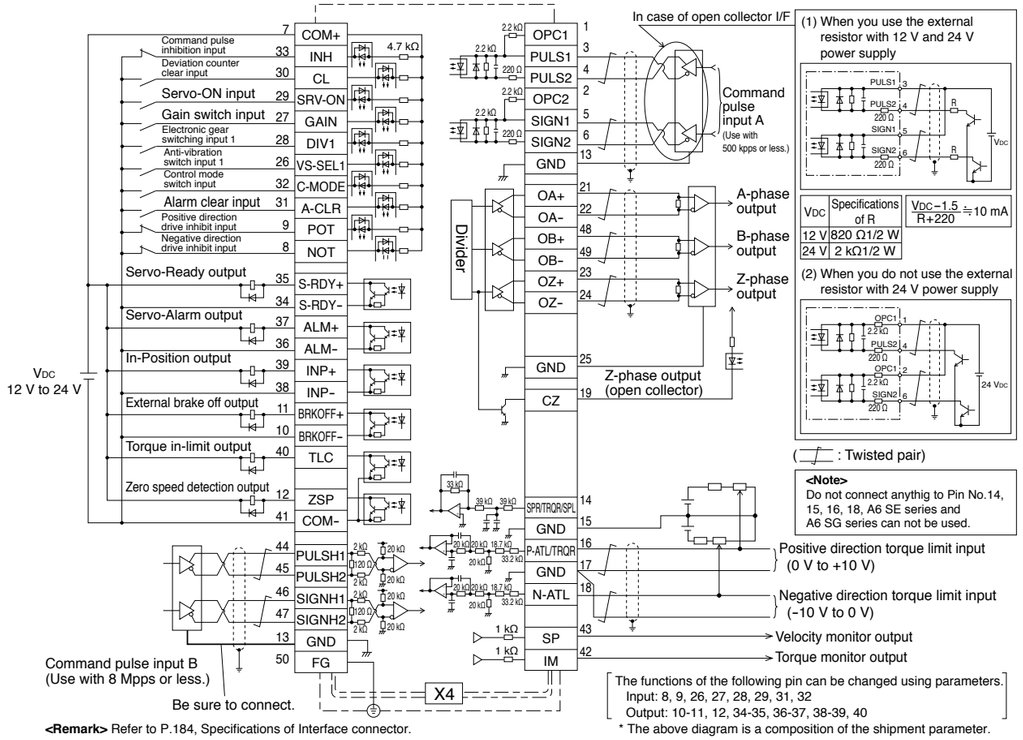

<Remark> Refer to P.184, Specifications of Interface connector.

* The above diagram is a composition of the shipment parameter.

Wiring Example of Velocity Control Mode

* Excluding A6 SE, A6 SG Series

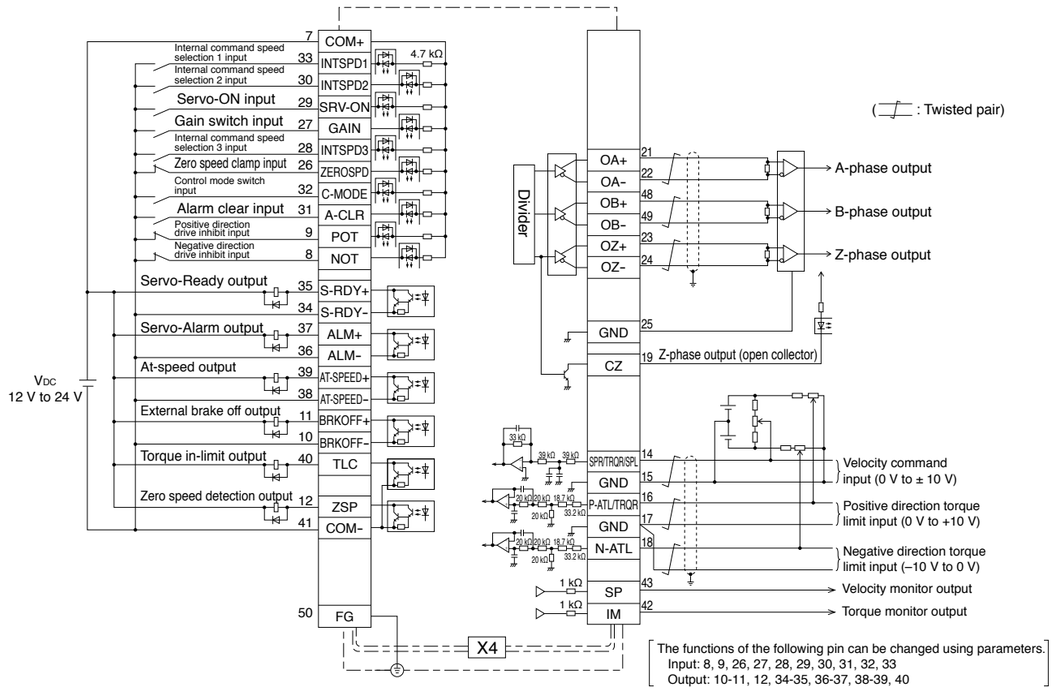

<Remark> Refer to P.184, Specifications of Interface connector.

* The above diagram is a composition of the shipment parameter.

Wiring to the Connector, X4

Wiring Example of Torque Control Mode

* Excluding A6 SE, A6 SG Series

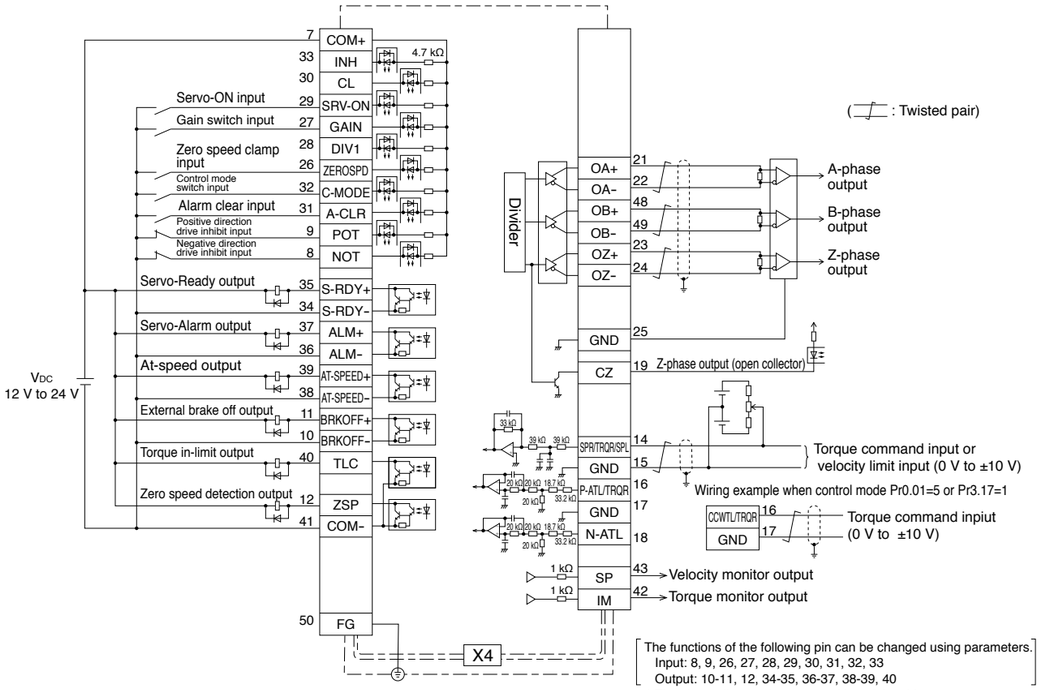

<Remark> Refer to P.184, Specifications of Interface connector.

Wiring Example of Full-closed Control Mode

* Excluding A6 SE, A6 SG Series

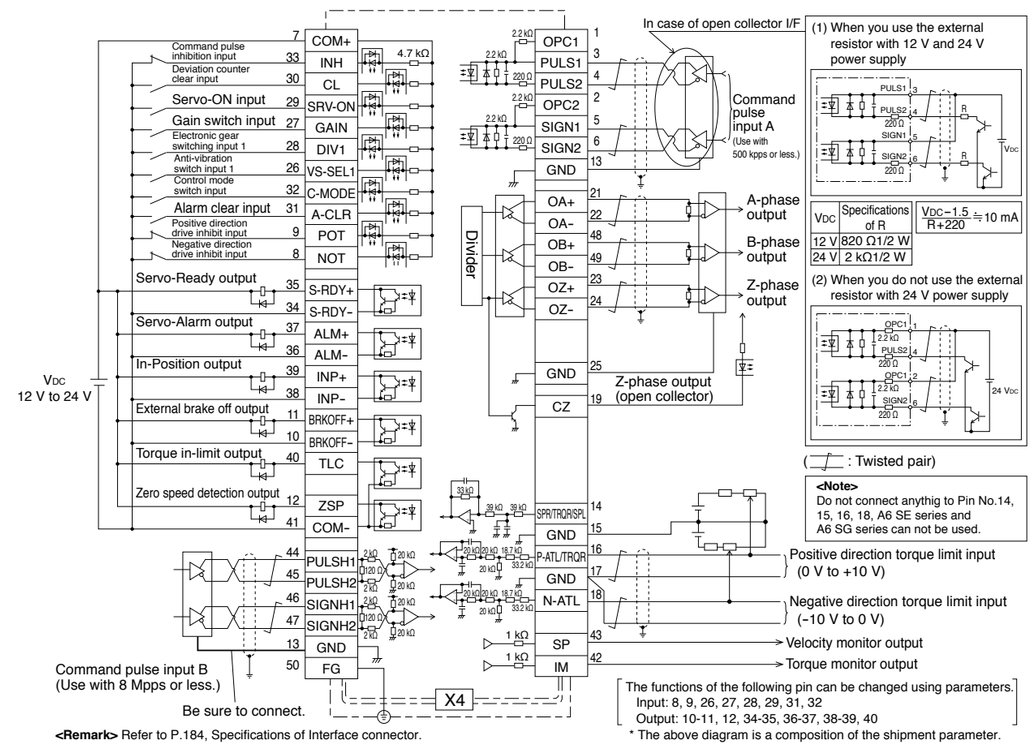

<Remark> Refer to P.184, Specifications of Interface connector.

Wiring to the Connector, X5

* Excluding A6 SE, A6 SG Series

Applicable External Scale

Applicable External Scale	Manufacturer	Model No.	Resolution [μm]	Maximum speed (m/s)*1
Parallel type (AB-phase)	General	—	Maximum speed after 4 × multiplication : 4 Mpps	
Serial type (Incremental)	Nidec Sankyo Corporation	PSLH	0.1	6
	Magnescale Co., Ltd.	SL700-PL101RP/RHP	0.1	10
		SL710-PL101RP/RHP	0.1	10
		SR75	0.01 to 1	3.3
		SR85	0.01 to 1	3.3
		BF1	0.001/0.01	0.4/1.8
Serial type (Absolute)	HEIDENHAIN	LIC2197P/LIC2199P	0.05/0.1	10
		LIC4193P/LIC4195P LIC4197P/LIC4199P	0.001 /0.005 /0.01	10
	Magnescale Co., Ltd.	SR77	0.01 to 1	3.3
		SR87	0.01 to 1	3.3
	Mitutoyo Corporation	AT573A	0.05	2.5
		ST778A(L)	0.1	5
	Renishaw plc	RESOLUTE	0.001	0.4
			0.05	20
			0.1	40
	FAGOR AUTOMATION	SAP / SVAP / GAP	0.05	2.5
		LAP	0.1	2
		SAP10/SVAP10/GAP10	0.01	3
		LAP10	0.01	2

*1 The maximum speed is a characteristic of the driver. It is limited by the configration of the machine and the system.

* For more information about the external scale product, please contact the manufacturer.

Wiring Diagram of X5

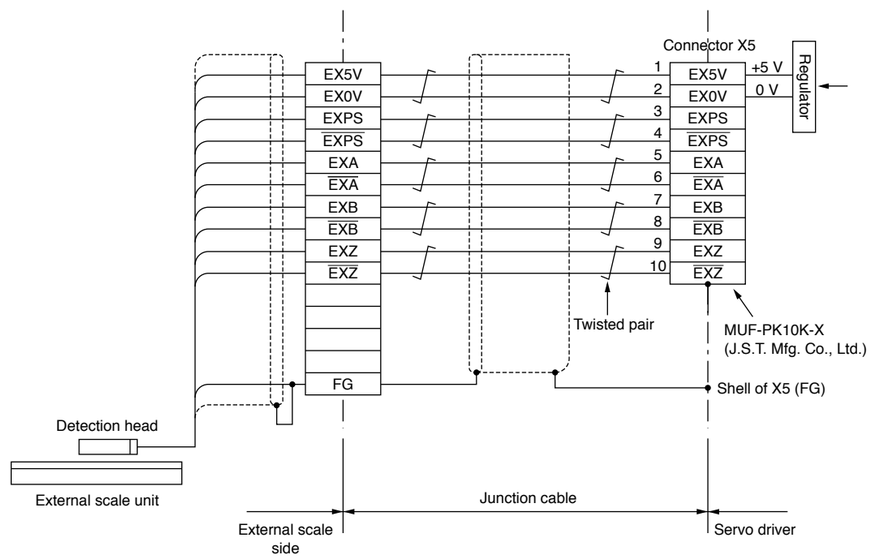

Wiring to the Connector, X6

When using a 23-bit absolute encoder as an absolute system*.

* When use a multi-turn data.

● MSMF 50 W to 1000 W ● MHMF 50 W to 1000 W ● MQMF 100 W to 400 W <Leadwire type>

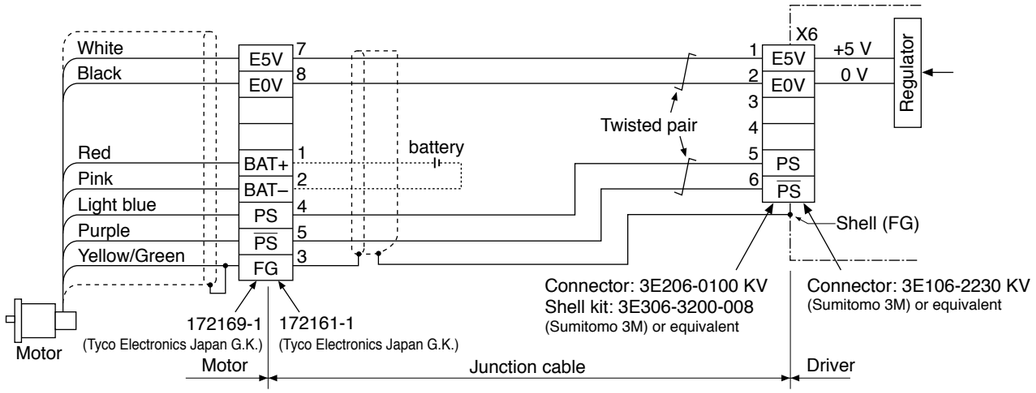

● MSMF 50 W to 1000 W ● MHMF 50 W to 1000 W ● MQMF 100 W to 400 W <Connector type>

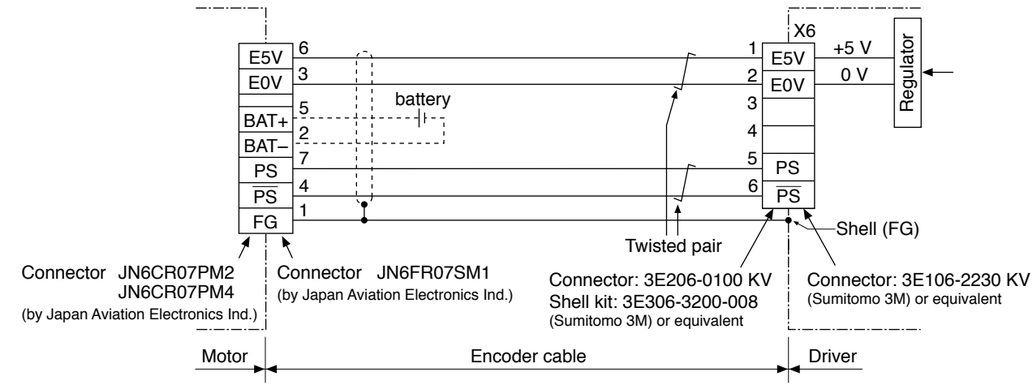

<Caution>

- Tighten the motor connector mounting screw (M2) with a torque between 0.19 N·m and 0.21 N·m. To avoid damage, be sure to use only the screw supplied with the connector.
- Do not remove the gasket supplied with the junction cable connector. Securely install the gasket in place. Otherwise, the degree of protection of IP67 will not be guaranteed.

[Connector pin assignment (Motor side)]

(Viewed from cable)

● MSMF 1.0 kW to 5.0 kW ● MHMF 1.0 kW to 5.0 kW
● MDMF 1.0 kW to 5.0 kW ● MGMF 0.85 kW to 4.4 kW

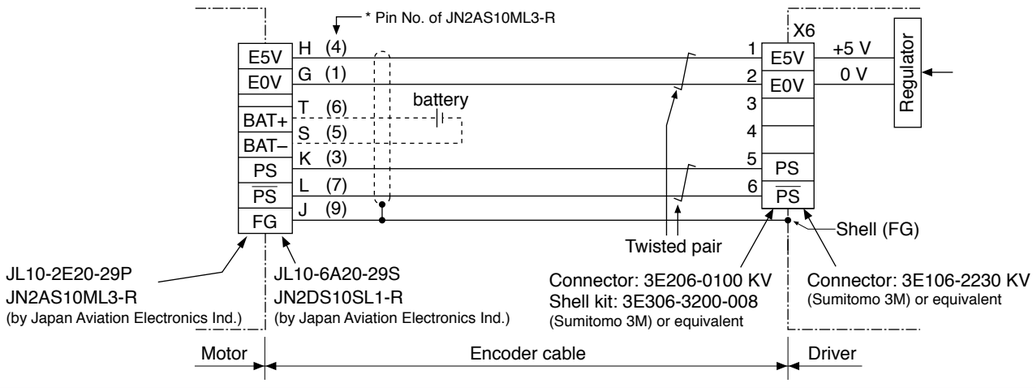

[Connector pin assignment] Refer to P.169, P.170 “Specifications of Motor connector”.

When using a 23-bit absolute encoder as a incremental system*.

* When do not use a multi-turn data.

● MSMF 50 W to 1000 W ● MHMF 50 W to 1000 W ● MQMF 100 W to 400 W <Leadwire type>

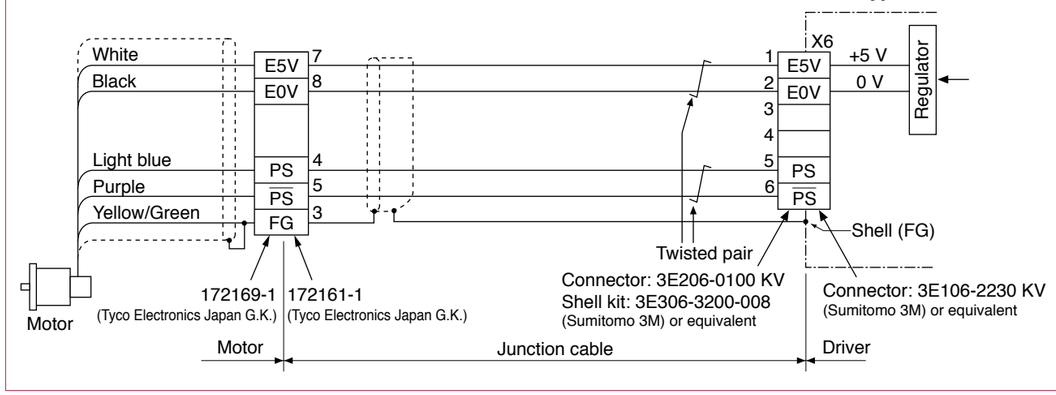

● MSMF 50 W to 1000 W ● MHMF 50 W to 1000 W ● MQMF 100 W to 400 W <Connector type>

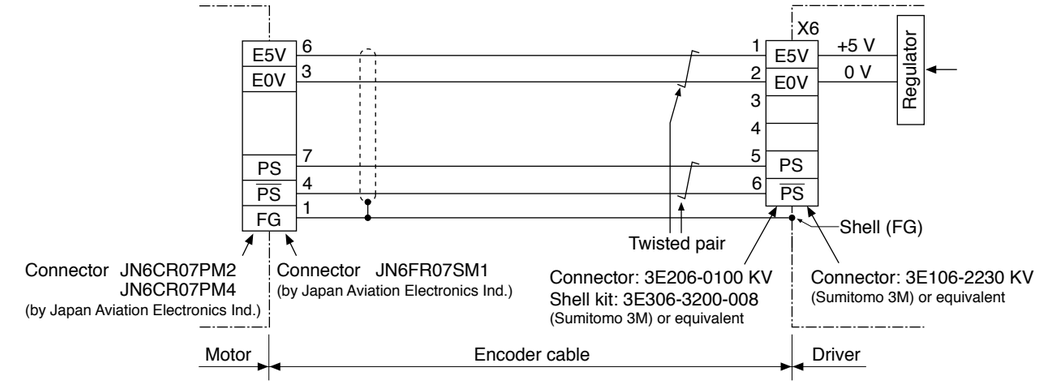

<Caution>

- Tighten the motor connector mounting screw (M2) with a torque between 0.19 N·m and 0.21 N·m. To avoid damage, be sure to use only the screw supplied with the connector.
- Do not remove the gasket supplied with the junction cable connector. Securely install the gasket in place. Otherwise, the degree of protection of IP67 will not be guaranteed.

[Connector pin assignment (Motor side)]

(Viewed from cable)

● MSMF 1.0 kW to 5.0 kW ● MHMF 1.0 kW to 5.0 kW
● MDMF 1.0 kW to 5.0 kW ● MGMF 0.85 kW to 4.4 kW

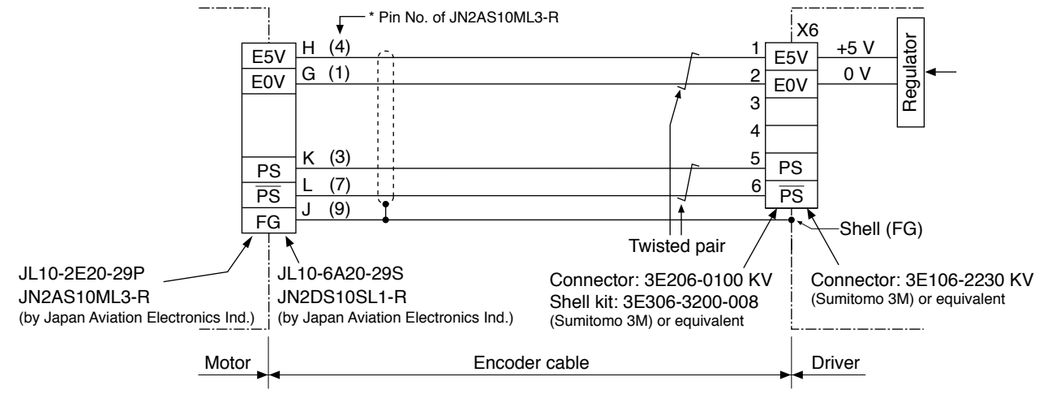

[Connector pin assignment] Refer to P.169, P.170 “Specifications of Motor connector”.

* All dimensions shown in this catalog are for the A6 SF series, but outer dimensions are the same as the A6 SE series. For appearance, refer to P. 19 and P. 20.

A-frame

Unit [mm]

X1: USB connector
X2: RS232/485 communication connector
X3: Safety function connector
X4: Interface connector
X5: For external scale connection
X6: For encoder connection

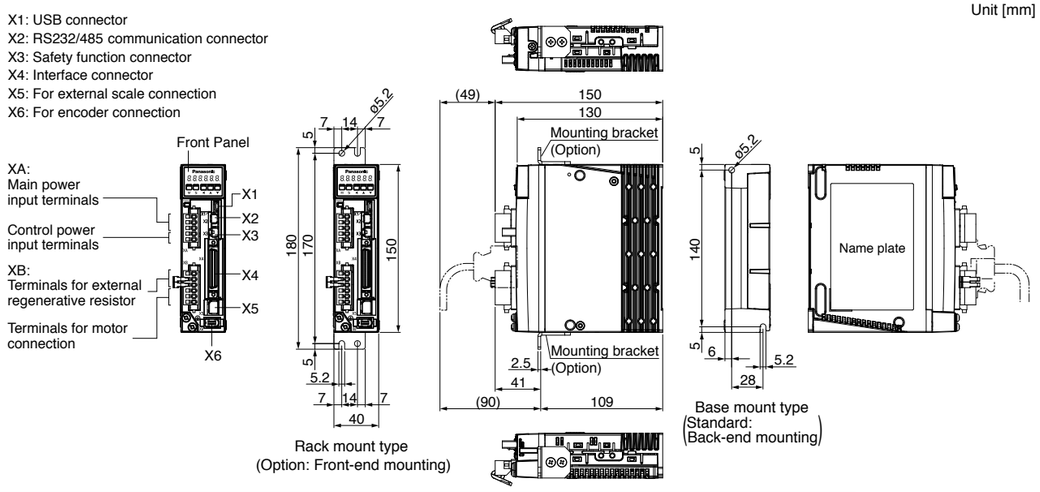

A-frame: Connector of driver side			Multifunction type	RS485 communication type	Basic type
Connector XA	S05B-F32SK-GGXR	J.S.T. Mfg. Co., Ltd.	●	●	●
Connector XB	S06B-F32SK-GGXR	J.S.T. Mfg. Co., Ltd.	●	●	●
Connector X1	UB-M5BR-DMP14-4S (or equivalent)	J.S.T. Mfg. Co., Ltd.	●	●	●
Connector X2	1-2040537-1 (or equivalent)	Tyco Electronics Japan G.K.	●	●	—
Connector X3	2040537-1 (or equivalent)	Tyco Electronics Japan G.K.	●	—	—
Connector X4	10250-52A2PE (or equivalent)	Sumitomo 3M	●	●	●
Connector X5	MUF-RS10DK-GKXR (or equivalent)	J.S.T. Mfg. Co., Ltd.	●	—	—
Connector X6	3E106-2230 KV (or equivalent)	Sumitomo 3M	●	●	●

<Attached to the driver>

Connector of power and motor side			Multifunction type	RS485 communication type	Basic type
Connector XA	05JFAT-SAXGF	J.S.T. Mfg. Co., Ltd.	●	●	●
Connector XB	06JFAT-SAXGF	J.S.T. Mfg. Co., Ltd.	●	●	●

Mass: 0.8 kg

B-frame

Unit [mm]

XA: ① Main power input terminals
② Control power input terminals
XB: ① Terminals for external regenerative resistor
② Terminals for motor connection

X1: USB connector
X2: RS232/485 communication connector
X3: Safety function connector
X4: Interface connector
X5: For external scale connection
X6: For encoder connection

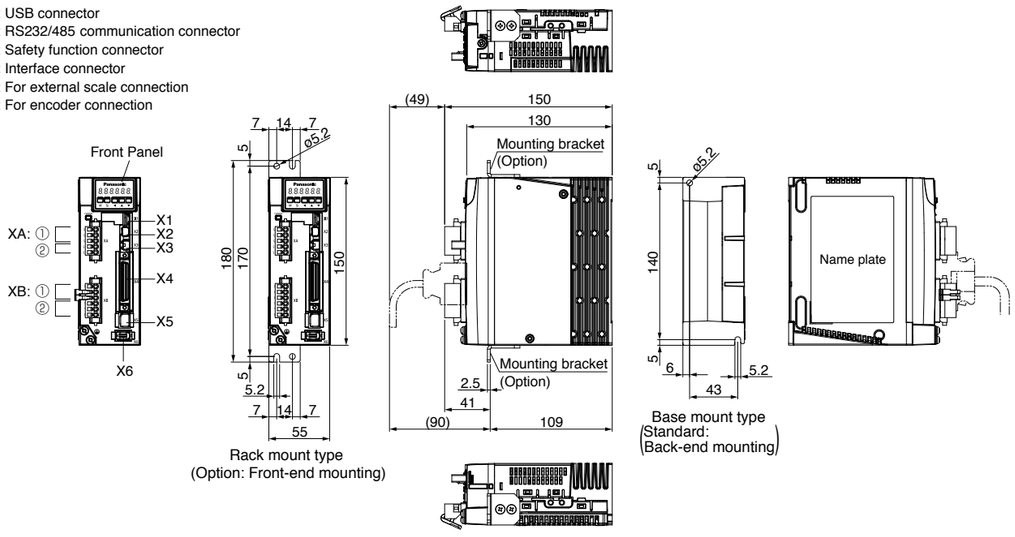

* For connectors used to connect to the driver, power supply and motor, refer to the A-frame table because both frames use the same connectors.

Mass: 1.0 kg

C-frame

Unit [mm]

XA: ① Main power input terminals
② Control power input terminals
XB: ① Terminals for external regenerative resistor
② Terminals for motor connection

X1: USB connector
X2: RS232/485 communication connector
X3: Safety function connector
X4: Interface connector
X5: For external scale connection
X6: For encoder connection

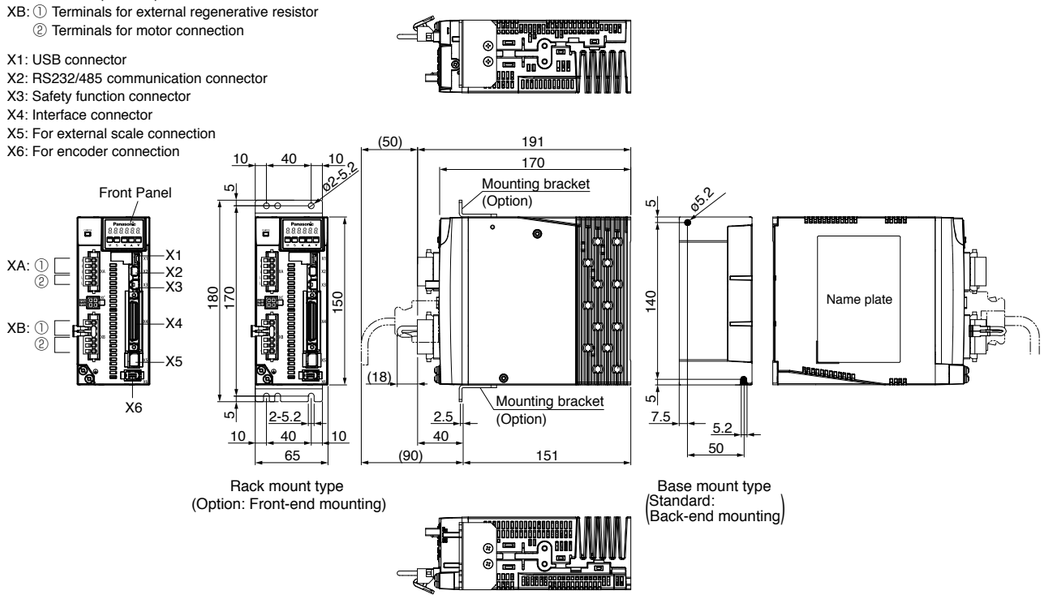

* For connectors used to connect to the driver, power supply and motor, refer to the A-frame table because both frames use the same connectors.

Mass: 1.6 kg

D-frame (200 V)

Unit [mm]

XA: ① Main power input terminals
② Control power input terminals
XB: ① Terminals for external regenerative resistor
② Terminals for motor connection

X1: USB connector
X2: RS232/485 communication connector
X3: Safety function connector
X4: Interface connector
X5: For external scale connection
X6: For encoder connection

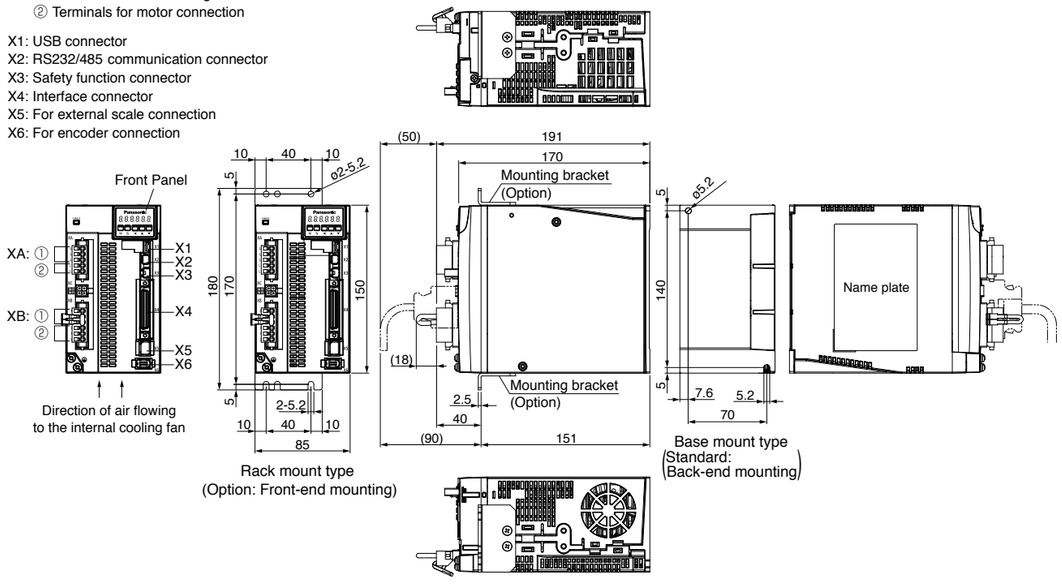

* For connectors used to connect to the driver, power supply and motor, refer to the A-frame table because both frames use the same connectors.

Mass: 2.1 kg

* All dimensions shown in this catalog are for the A6 SF series, but outer dimensions are the same as the A6 SE series. For appearance, refer to P.19 and P.20.

E-frame (200 V)

Unit [mm]

X1: USB connector
X2: RS232/485 communication connector
X3: Safety function connector
X4: Interface connector
X5: For external scale connection
X6: For encoder connection

XA: ① Main power input terminals
② Control power input terminals
XB: Terminals for motor connection
XC: Terminals for external regenerative resistor

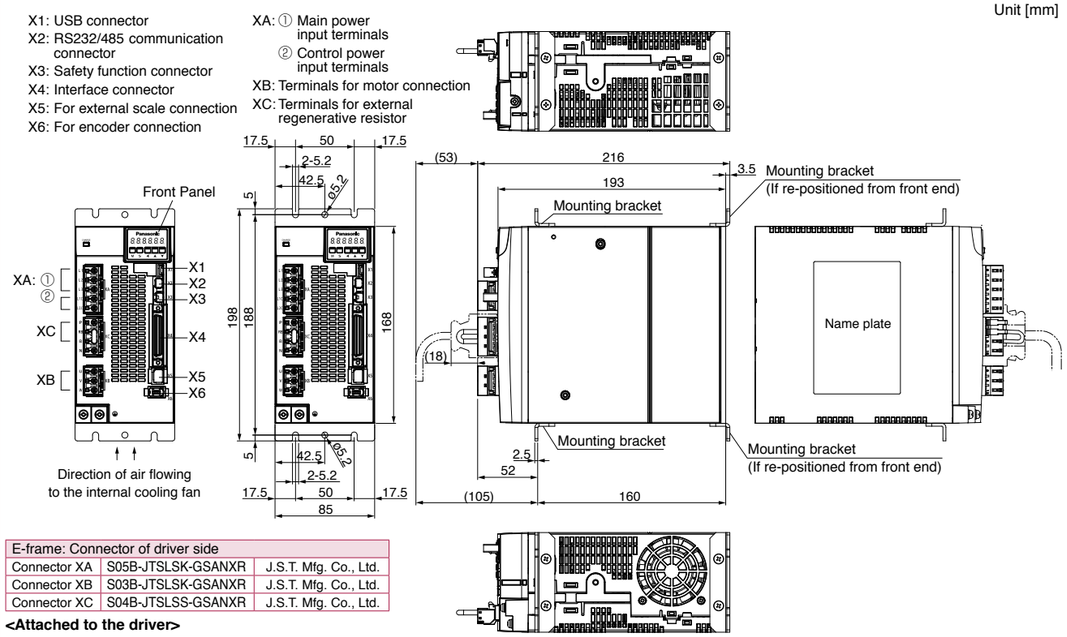

E-frame: Connector of driver side		
Connector XA	S05B-JTSLSK-GSANXR	J.S.T. Mfg. Co., Ltd.
Connector XB	S03B-JTSLSK-GSANXR	J.S.T. Mfg. Co., Ltd.
Connector XC	S04B-JTSLSS-GSANXR	J.S.T. Mfg. Co., Ltd.

<Attached to the driver>

E-frame: Connector of power and motor side		
Connector XA	05JFAT-SAXGSA-L	J.S.T. Mfg. Co., Ltd.
Connector XB	03JFAT-SAXGSA-L	J.S.T. Mfg. Co., Ltd.
Connector XC	04JFAT-SAXGSA-L	J.S.T. Mfg. Co., Ltd.

* For connectors X1 to X6 for connection to the driver, refer to the those listed in the A-frame table because both frames use the same connectors.

Mass: 2.5 kg

F-frame (200 V)

Unit [mm]

X1: USB connector
X2: RS232/485 communication connector
X3: Safety function connector
X4: Interface connector
X5: For external scale connection
X6: For encoder connection

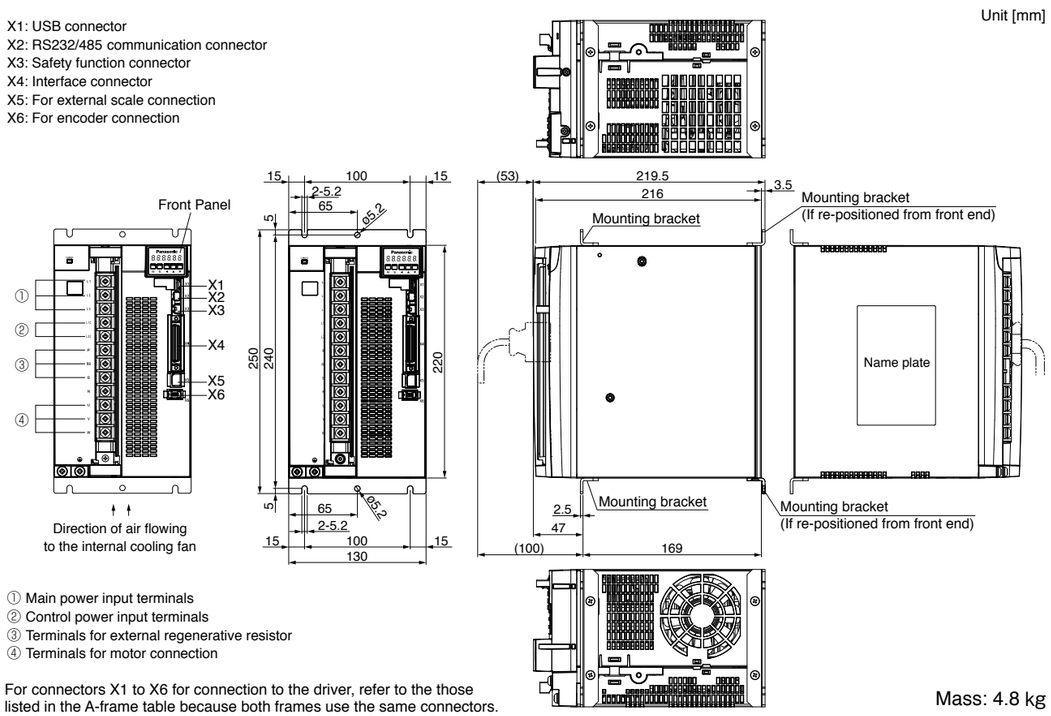

① Main power input terminals
② Control power input terminals
③ Terminals for external regenerative resistor
④ Terminals for motor connection

* For connectors X1 to X6 for connection to the driver, refer to the those listed in the A-frame table because both frames use the same connectors.

Mass: 4.8 kg

Features/ Lineup

Features

- Line-up IP67 motor: 50 W to 5.0 kW
- Max speed: 6500r/min (MHMF 50 W to 400 W)
- Low inertia (MSMF) to High inertia (MHMF).
- Low cogging torque: Rated torque ratio 0.5 % (typical value).
- 23-bit absolute encoder (8388608 pulse).

Motor Lineup

80 mm sq. or less

MSMF
Low inertia
Max. speed : 6000 r/min
Rated speed : 3000 r/min
Rated output :
50 W to 1000 W
Enclosure:
IP65: Leadwire type
IP67: Connector type

MQMF
(Flat type)
Middle inertia
Max. speed : 6500 r/min
Rated speed : 3000 r/min
Rated output :
100 W to 400 W
Enclosure:
IP65: Leadwire type
IP67: Connector type

MHMF
High inertia
Max. speed :
6500 r/min
6000 r/min (750 W,1000 W)
Rated speed : 3000 r/min
Rated output :
50 W to 1000 W
Enclosure:
IP65: Leadwire type
IP67: Connector type

100 mm sq. or more

MSMF
Low inertia
Max. speed : 5000 r/min
4500 r/min (4.0 kW,5.0 kW)
Rated speed : 3000 r/min
Rated output : 1.0 kW to 5.0 kW
Enclosure : IP67: Connector type

MDMF
Middle inertia
Max. speed : 3000 r/min
Rated speed : 2000 r/min
Rated output : 1.0 kW to 5.0 kW
Enclosure : IP67: Connector type

MGMF
(Low speed/ High torque type)
Middle inertia
Max. speed : 3000 r/min
Rated speed : 1500 r/min
Rated output : 0.85 kW to 4.4 kW
Enclosure : IP67: Connector type

MHMF
High inertia
Max. speed : 3000 r/min
Rated speed : 2000 r/min
Rated output : 1.0 kW to 5.0 kW
Enclosure : IP67: Connector type

Motor Contents

100 V MSMF 50 W [Low inertia 38 mm sq.]

Specifications

			AC100 V
Motor model *1	IP65		MSMF5AZL1□□
Applicable driver	Model No.	Multifunction type	MADLT01SF
		RS485 communication type *2	MADLN01SG
		Basic type *2	MADLN01SE
	Frame symbol		A-frame
Power supply capacity (kVA)			0.4
Rated output (W)			50
Rated torque (N·m)			0.16
Continuous stall torque (N·m)			0.16
Momentary Max. peak torque (N·m)			0.48
Rated current (A(rms))			1.1
Max. current (A(o-p))			4.7
Regenerative brake frequency (times/min) Note)1	Without option		No limit Note)2
	DV0P4280		No limit Note)2
Rated rotational speed (r/min)			3000
Max. rotational speed (r/min)			6000
Moment of inertia of rotor ($\times 10^{-4}$ kg·m^2)	Without brake		0.026
	With brake		0.029
Recommended moment of inertia ratio of the load and the rotor Note)3			30 times or less
Rotary encoder specifications *3			23-bit Absolute
	Resolution per single turn		8388608

• **Brake specifications** (For details, refer to P.167)
(This brake will be released when it is energized. Do not use this for braking the motor in motion.)

Static friction torque (N·m)	0.294 or more
Engaging time (ms)	35 or less
Releasing time (ms) Note)4	20 or less
Exciting current (DC) (A)	0.30
Releasing voltage (DC) (V)	1 or more
Exciting voltage (DC) (V)	24±1.2

• **Permissible load** (For details, refer to P.166)

During assembly	Radial load P-direction (N)	147
	Thrust load A-direction (N)	88.0
	Thrust load B-direction (N)	117.6
During operation	Radial load P-direction (N)	68.6
	Thrust load A, B-direction (N)	58.8

• For details of Note)1 to Note)4, refer to P.165.
• Dimensions of Driver, refer to P.47.
*1 □□ in the motor part number represents the motor specifications.
*2 Basic type and RS485 communication type are "Position control type".
Detail of model designation, refer to P.18.
*3 When using a rotary encoder as an incremental system (not using multi-turn data), do not connect a battery for absolute encoder.

Torque characteristics (at AC100 V of power voltage <Dotted line represents the torque at 10 % less supply voltage.>)

Without oil seal

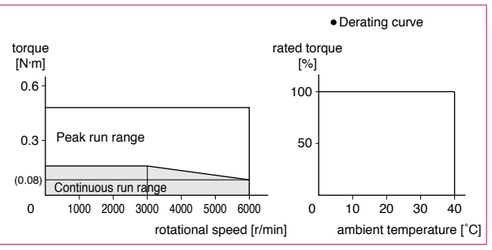

With oil seal

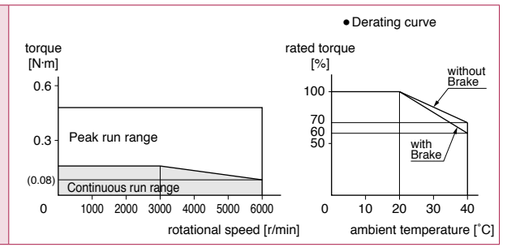

Dimensions

<without Brake>

Mass: 0.32 kg

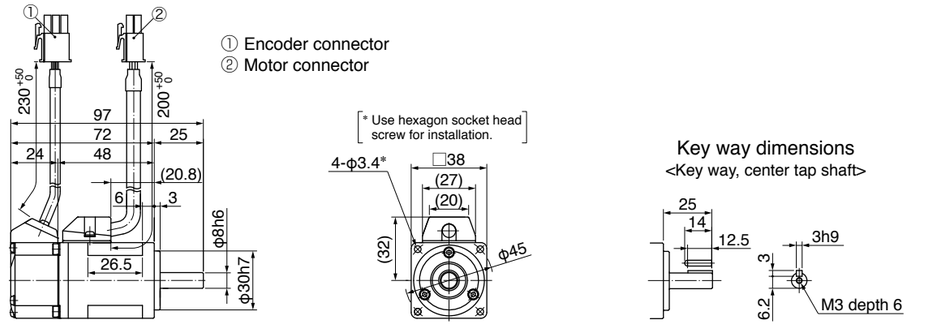

[Unit: mm]

For connector type IP67 motors, refer to P.100. ● For the dimensions with brake, refer to the right page.

<Cautions> Reduce the moment of inertia ratio if high speed response operation is required.
Dimensions are subject to change without notice. Contact us or a dealer for the latest information.
Read the Instruction Manual carefully and understand all precautions and remarks before using the products.

200 V MSMF 50 W [Low inertia 38 mm sq.]

Specifications

			AC200 V
Motor model *1	IP65		MSMF5AZL1□□
Applicable driver	Model No.	Multifunction type	MADLT05SF
		RS485 communication type *2	MADLN05SG
		Basic type *2	MADLN05SE
	Frame symbol		A-frame
Power supply capacity (kVA)			0.5
Rated output (W)			50
Rated torque (N·m)			0.16
Continuous stall torque (N·m)			0.16
Momentary Max. peak torque (N·m)			0.48
Rated current (A(rms))			1.1
Max. current (A(o-p))			4.7
Regenerative brake frequency (times/min) Note)1	Without option		No limit Note)2
	DV0P4281		No limit Note)2
Rated rotational speed (r/min)			3000
Max. rotational speed (r/min)			6000
Moment of inertia of rotor ($\times 10^{-4}$ kg·m^2)	Without brake		0.026
	With brake		0.029
Recommended moment of inertia ratio of the load and the rotor Note)3			30 times or less
Rotary encoder specifications *3			23-bit Absolute
	Resolution per single turn		8388608

• **Brake specifications** (For details, refer to P.167)
(This brake will be released when it is energized. Do not use this for braking the motor in motion.)

Static friction torque (N·m)	0.294 or more
Engaging time (ms)	35 or less
Releasing time (ms) Note)4	20 or less
Exciting current (DC) (A)	0.30
Releasing voltage (DC) (V)	1 or more
Exciting voltage (DC) (V)	24±1.2

• **Permissible load** (For details, refer to P.166)

During assembly	Radial load P-direction (N)	147
	Thrust load A-direction (N)	88.0
	Thrust load B-direction (N)	117.6
During operation	Radial load P-direction (N)	68.6
	Thrust load A, B-direction (N)	58.8

• For details of Note)1 to Note)4, refer to P.165.
• Dimensions of Driver, refer to P.47.
*1 □□ in the motor part number represents the motor specifications.
*2 Basic type and RS485 communication type are "Position control type".
Detail of model designation, refer to P.18.
*3 When using a rotary encoder as an incremental system (not using multi-turn data), do not connect a battery for absolute encoder.

Torque characteristics (at AC200 V of power voltage <Dotted line represents the torque at 10 % less supply voltage.>)

Without oil seal

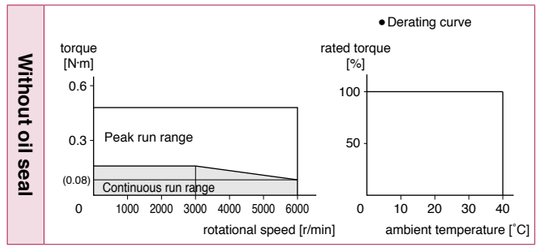

With oil seal

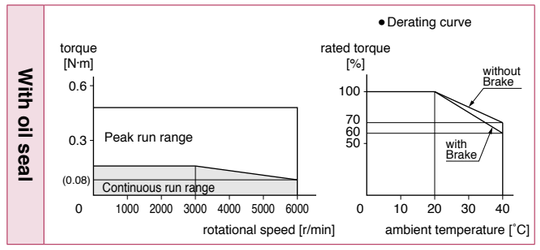

Dimensions

<with brake>

Mass: 0.53 kg

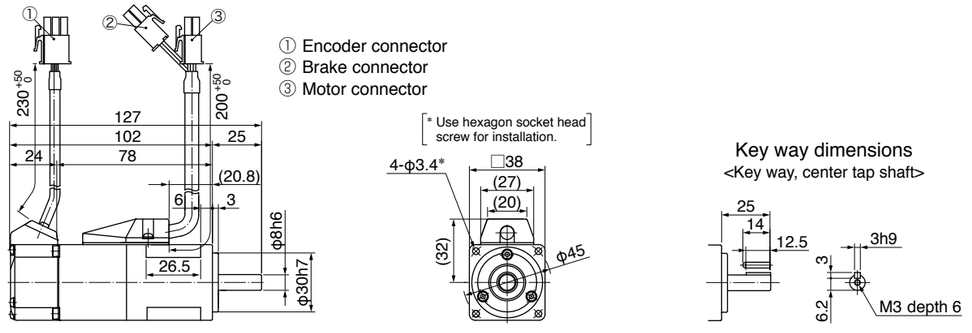

[Unit: mm]

For connector type IP67 motors, refer to P.100. ● For the dimensions without brake, refer to the left page.

<Cautions> Reduce the moment of inertia ratio if high speed response operation is required.
Dimensions are subject to change without notice. Contact us or a dealer for the latest information.
Read the Instruction Manual carefully and understand all precautions and remarks before using the products.

100 V MSMF 100 W [Low inertia 38 mm sq.]

Specifications

			AC100 V
Motor model *1	IP65		MSMF011L1□□
Applicable driver	Model No.	Multifunction type	MADLT11SF
		RS485 communication type *2	MADLN11SG
		Basic type *2	MADLN11SE
	Frame symbol		A-frame
Power supply capacity (kVA)			0.4
Rated output (W)			100
Rated torque (N·m)			0.32
Continuous stall torque (N·m)			0.32
Momentary Max. peak torque (N·m)			0.95
Rated current (A(rms))			1.6
Max. current (A(o-p))			6.9
Regenerative brake frequency (times/min) Note)1	Without option		No limit Note)2
	DV0P4280		No limit Note)2
Rated rotational speed (r/min)			3000
Max. rotational speed (r/min)			6000
Moment of inertia of rotor ($\times 10^{-4}$ kg·m^2)	Without brake		0.048
	With brake		0.051
Recommended moment of inertia ratio of the load and the rotor Note)3			30 times or less
Rotary encoder specifications *3			23-bit Absolute
	Resolution per single turn		8388608

• **Brake specifications** (For details, refer to P.167)
(This brake will be released when it is energized. Do not use this for braking the motor in motion.)

Static friction torque (N·m)	0.294 or more
Engaging time (ms)	35 or less
Releasing time (ms) Note)4	20 or less
Exciting current (DC) (A)	0.30
Releasing voltage (DC) (V)	1 or more
Exciting voltage (DC) (V)	24±1.2

• **Permissible load** (For details, refer to P.166)

During assembly	Radial load P-direction (N)	147
	Thrust load A-direction (N)	88.0
	Thrust load B-direction (N)	117.6
During operation	Radial load P-direction (N)	68.6
	Thrust load A, B-direction (N)	58.8

• For details of Note)1 to Note)4, refer to P.165.
• Dimensions of Driver, refer to P.47.
*1 □□ in the motor part number represents the motor specifications.
*2 Basic type and RS485 communication type are "Position control type".
Detail of model designation, refer to P.18.
*3 When using a rotary encoder as an incremental system (not using multi-turn data), do not connect a battery for absolute encoder.

Torque characteristics (at AC100 V of power voltage <Dotted line represents the torque at 10 % less supply voltage.>)

Without oil seal

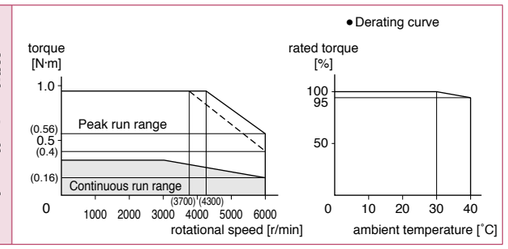

With oil seal

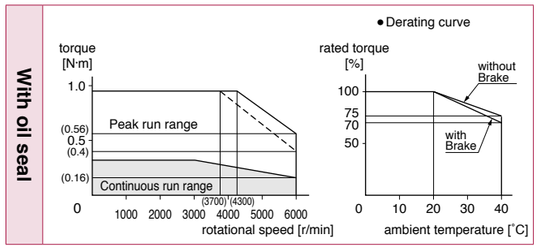

Dimensions

<without brake>

Mass: 0.47 kg

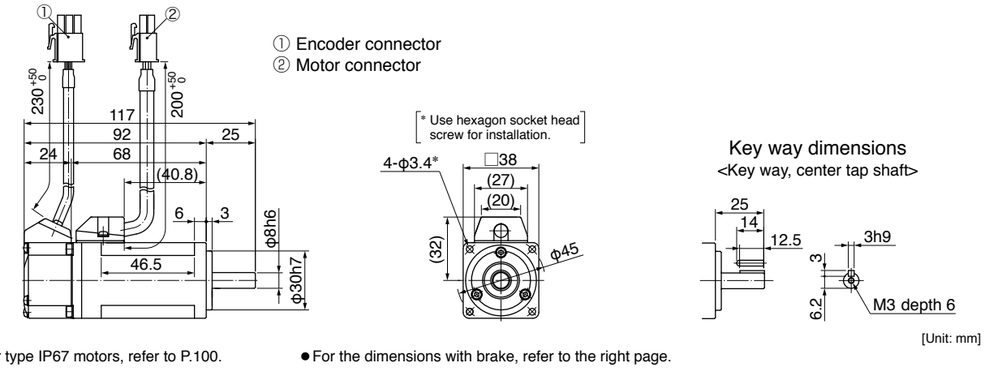

For connector type IP67 motors, refer to P.100. ● For the dimensions with brake, refer to the right page.

<Cautions> Reduce the moment of inertia ratio if high speed response operation is required.
Dimensions are subject to change without notice. Contact us or a dealer for the latest information.
Read the Instruction Manual carefully and understand all precautions and remarks before using the products.

200 V MSMF 100 W [Low inertia 38 mm sq.]

Specifications

			AC200 V
Motor model *1	IP65		MSMF012L1□□
Applicable driver	Model No.	Multifunction type	MADLT05SF
		RS485 communication type *2	MADLN05SG
		Basic type *2	MADLN05SE
	Frame symbol		A-frame
Power supply capacity (kVA)			0.5
Rated output (W)			100
Rated torque (N·m)			0.32
Continuous stall torque (N·m)			0.32
Momentary Max. peak torque (N·m)			0.95
Rated current (A(rms))			1.1
Max. current (A(o-p))			4.7
Regenerative brake frequency (times/min) Note)1	Without option		No limit Note)2
	DV0P4281		No limit Note)2
Rated rotational speed (r/min)			3000
Max. rotational speed (r/min)			6000
Moment of inertia of rotor ($\times 10^{-4}$ kg·m^2)	Without brake		0.048
	With brake		0.051
Recommended moment of inertia ratio of the load and the rotor Note)3			30 times or less
Rotary encoder specifications *3			23-bit Absolute
	Resolution per single turn		8388608

• **Brake specifications** (For details, refer to P.167)
(This brake will be released when it is energized. Do not use this for braking the motor in motion.)

Static friction torque (N·m)	0.294 or more
Engaging time (ms)	35 or less
Releasing time (ms) Note)4	20 or less
Exciting current (DC) (A)	0.30
Releasing voltage (DC) (V)	1 or more
Exciting voltage (DC) (V)	24±1.2

• **Permissible load** (For details, refer to P.166)

During assembly	Radial load P-direction (N)	147
	Thrust load A-direction (N)	88.0
	Thrust load B-direction (N)	117.6
During operation	Radial load P-direction (N)	68.6
	Thrust load A, B-direction (N)	58.8

• For details of Note)1 to Note)4, refer to P.165.
• Dimensions of Driver, refer to P.47.
*1 □□ in the motor part number represents the motor specifications.
*2 Basic type and RS485 communication type are "Position control type".
Detail of model designation, refer to P.18.
*3 When using a rotary encoder as an incremental system (not using multi-turn data), do not connect a battery for absolute encoder.

Torque characteristics (at AC200 V of power voltage <Dotted line represents the torque at 10 % less supply voltage.>)

Without oil seal

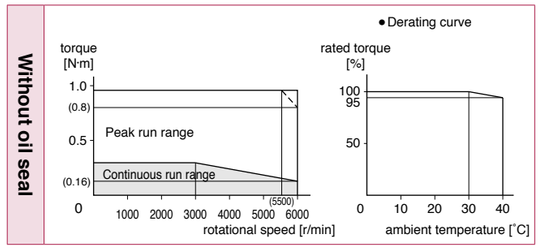

With oil seal

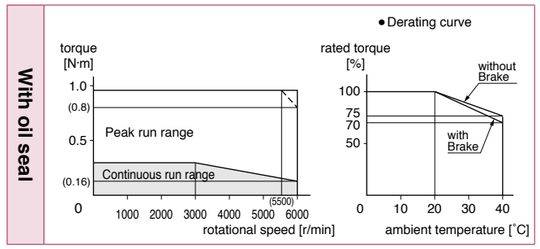

Dimensions

<with brake>

Mass: 0.68 kg

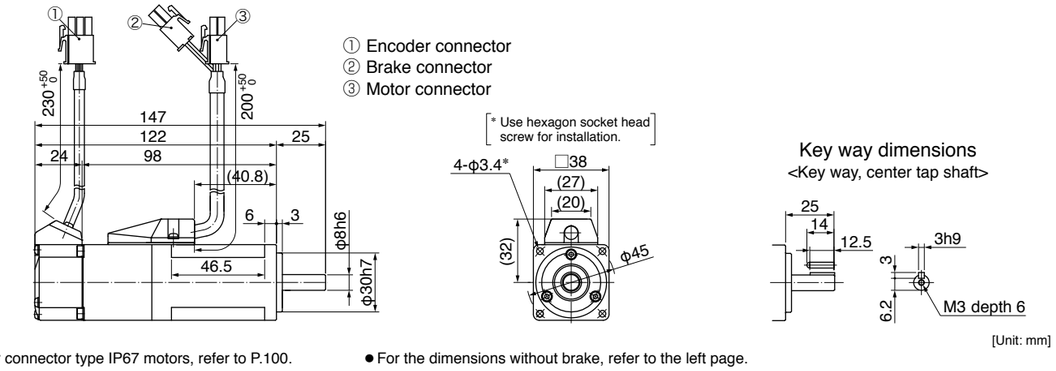

For connector type IP67 motors, refer to P.100. ● For the dimensions without brake, refer to the left page.

<Cautions> Reduce the moment of inertia ratio if high speed response operation is required.
Dimensions are subject to change without notice. Contact us or a dealer for the latest information.
Read the Instruction Manual carefully and understand all precautions and remarks before using the products.

100 V MSMF 200 W [Low inertia 60 mm sq.]

Specifications

			AC100 V
Motor model *1	IP65		MSMF021L1□□
Applicable driver	Model No.	Multifunction type	MBDLT21SF
		RS485 communication type *2	MBDLN21SG
		Basic type *2	MBDLN21SE
	Frame symbol		B-frame
Power supply capacity		(kVA)	0.5
Rated output		(W)	200
Rated torque		(N·m)	0.64
Continuous stall torque		(N·m)	0.64
Momentary Max. peak torque		(N·m)	1.91
Rated current		(A(rms))	2.5
Max. current		(A(o-p))	10.6
Regenerative brake frequency (times/min) Note)1	Without option		No limit Note)2
	DV0P4283		No limit Note)2
Rated rotational speed		(r/min)	3000
Max. rotational speed		(r/min)	6000
Moment of inertia of rotor ($\times 10^{-4}$ kg·m^2)	Without brake		0.14
	With brake		0.17
Recommended moment of inertia ratio of the load and the rotor Note)3			30 times or less
Rotary encoder specifications *3			23-bit Absolute
	Resolution per single turn		8388608

• **Brake specifications** (For details, refer to P.167)
(This brake will be released when it is energized. Do not use this for braking the motor in motion.)

Static friction torque (N·m)	1.27 or more
Engaging time (ms)	50 or less
Releasing time (ms) Note)4	15 or less
Exciting current (DC) (A)	0.36
Releasing voltage (DC) (V)	1 or more
Exciting voltage (DC) (V)	24±1.2

• **Permissible load** (For details, refer to P.166)

During assembly	Radial load P-direction (N)	392
	Thrust load A-direction (N)	147
	Thrust load B-direction (N)	196
During operation	Radial load P-direction (N)	245
	Thrust load A, B-direction (N)	98.0

• For details of Note)1 to Note)4, refer to P.165.
• Dimensions of Driver, refer to P.47.
*1 □□ in the motor part number represents the motor specifications.
*2 Basic type and RS485 communication type are "Position control type".
Detail of model designation, refer to P.18.
*3 When using a rotary encoder as an incremental system (not using multi-turn data), do not connect a battery for absolute encoder.

Torque characteristics (at AC100 V of power voltage <Dotted line represents the torque at 10 % less supply voltage.>)

Without oil seal

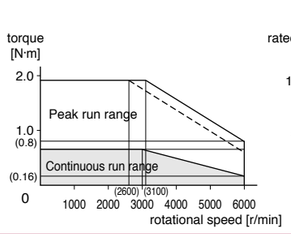

With oil seal

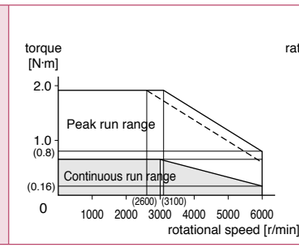

Dimensions

<without brake>

Mass: 0.82 kg

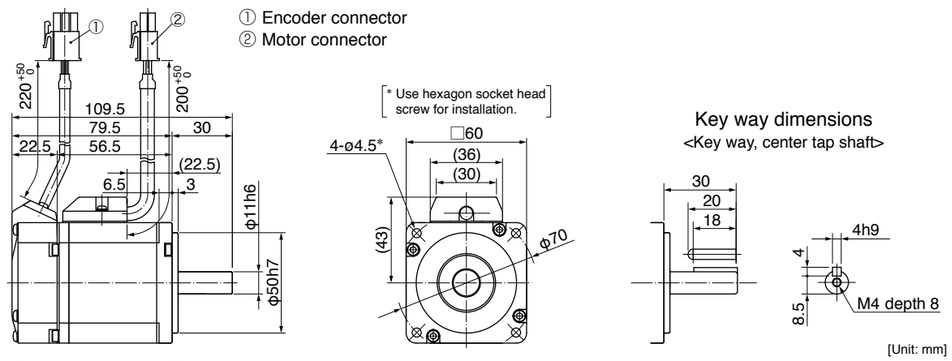

[Unit: mm]

For connector type IP67 motors, refer to P.100. ● For the dimensions with brake, refer to the right page.

<Cautions> Reduce the moment of inertia ratio if high speed response operation is required.
Dimensions are subject to change without notice. Contact us or a dealer for the latest information.
Read the Instruction Manual carefully and understand all precautions and remarks before using the products.

200 V MSMF 200 W [Low inertia 60 mm sq.]

Specifications

			AC200 V
Motor model *1	IP65		MSMF022L1□□
Applicable driver	Model No.	Multifunction type	MADLT15SF
		RS485 communication type *2	MADLN15SG
		Basic type *2	MADLN15SE
	Frame symbol		A-frame
Power supply capacity		(kVA)	0.5
Rated output		(W)	200
Rated torque		(N·m)	0.64
Continuous stall torque		(N·m)	0.64
Momentary Max. peak torque		(N·m)	1.91
Rated current		(A(rms))	1.5
Max. current		(A(o-p))	6.5
Regenerative brake frequency (times/min) Note)1	Without option		No limit Note)2
	DV0P4283		No limit Note)2
Rated rotational speed		(r/min)	3000
Max. rotational speed		(r/min)	6000
Moment of inertia of rotor ($\times 10^{-4}$ kg·m^2)	Without brake		0.14
	With brake		0.17
Recommended moment of inertia ratio of the load and the rotor Note)3			30 times or less
Rotary encoder specifications *3			23-bit Absolute
	Resolution per single turn		8388608

• **Brake specifications** (For details, refer to P.167)
(This brake will be released when it is energized. Do not use this for braking the motor in motion.)

Static friction torque (N·m)	1.27 or more
Engaging time (ms)	50 or less
Releasing time (ms) Note)4	15 or less
Exciting current (DC) (A)	0.36
Releasing voltage (DC) (V)	1 or more
Exciting voltage (DC) (V)	24±1.2

• **Permissible load** (For details, refer to P.166)

During assembly	Radial load P-direction (N)	392
	Thrust load A-direction (N)	147
	Thrust load B-direction (N)	196
During operation	Radial load P-direction (N)	245
	Thrust load A, B-direction (N)	98.0

• For details of Note)1 to Note)4, refer to P.165.
• Dimensions of Driver, refer to P.47.
*1 □□ in the motor part number represents the motor specifications.
*2 Basic type and RS485 communication type are "Position control type".
Detail of model designation, refer to P.18.
*3 When using a rotary encoder as an incremental system (not using multi-turn data), do not connect a battery for absolute encoder.

Torque characteristics (at AC200 V of power voltage <Dotted line represents the torque at 10 % less supply voltage.>)

Without oil seal

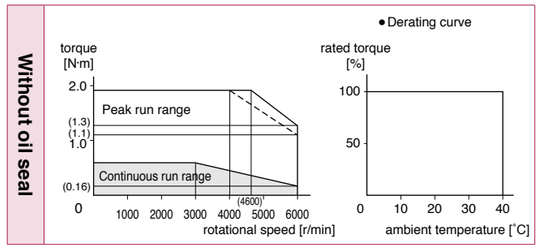

With oil seal

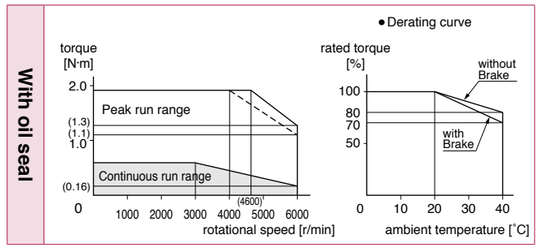

Dimensions

<with brake>

Mass: 1.3 kg

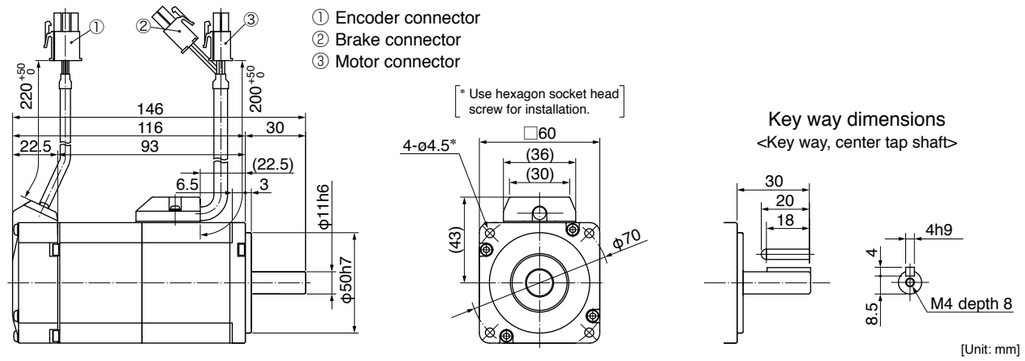

[Unit: mm]

For connector type IP67 motors, refer to P.100. ● For the dimensions without brake, refer to the left page.

<Cautions> Reduce the moment of inertia ratio if high speed response operation is required.
Dimensions are subject to change without notice. Contact us or a dealer for the latest information.
Read the Instruction Manual carefully and understand all precautions and remarks before using the products.

100 V MSMF 400 W [Low inertia 60 mm sq.]

Specifications

			AC100 V
Motor model *1	IP65		MSMF041L1□□
Applicable driver	Model No.	Multifunction type	MCDLT31SF
		RS485 communication type *2	MCDLN31SG
		Basic type *2	MCDLN31SE
	Frame symbol		C-frame
Power supply capacity		(kVA)	0.9
Rated output		(W)	400
Rated torque		(N·m)	1.27
Continuous stall torque		(N·m)	1.27
Momentary Max. peak torque		(N·m)	3.82
Rated current		(A(rms))	4.6
Max. current		(A(o-p))	19.5
Regenerative brake frequency (times/min) Note)1	Without option		No limit Note)2
	DV0P4282		No limit Note)2
Rated rotational speed		(r/min)	3000
Max. rotational speed		(r/min)	6000
Moment of inertia of rotor ($\times 10^{-4}$ kg·m^2)	Without brake		0.27
	With brake		0.30
Recommended moment of inertia ratio of the load and the rotor Note)3			30 times or less
Rotary encoder specifications *3			23-bit Absolute
	Resolution per single turn		8388608

• Brake specifications (For details, refer to P.167)
(This brake will be released when it is energized. Do not use this for braking the motor in motion.)

Static friction torque (N·m)	1.27 or more
Engaging time (ms)	50 or less
Releasing time (ms) Note)4	15 or less
Exciting current (DC) (A)	0.36
Releasing voltage (DC) (V)	1 or more
Exciting voltage (DC) (V)	24±1.2

• Permissible load (For details, refer to P.166)

During assembly	Radial load P-direction (N)	392
	Thrust load A-direction (N)	147
	Thrust load B-direction (N)	196
During operation	Radial load P-direction (N)	245
	Thrust load A, B-direction (N)	98.0

• For details of Note)1 to Note)4, refer to P.165.
• Dimensions of Driver, refer to P.48.
*1 □□ in the motor part number represents the motor specifications.
*2 Basic type and RS485 communication type are "Position control type".
Detail of model designation, refer to P.18.
*3 When using a rotary encoder as an incremental system (not using multi-turn data), do not connect a battery for absolute encoder.

Torque characteristics (at AC100 V of power voltage <Dotted line represents the torque at 10 % less supply voltage.>)

Without oil seal

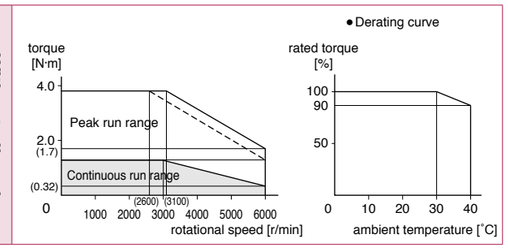

With oil seal

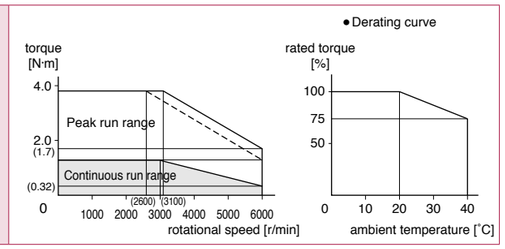

Dimensions

<without brake>

Mass: 1.2 kg

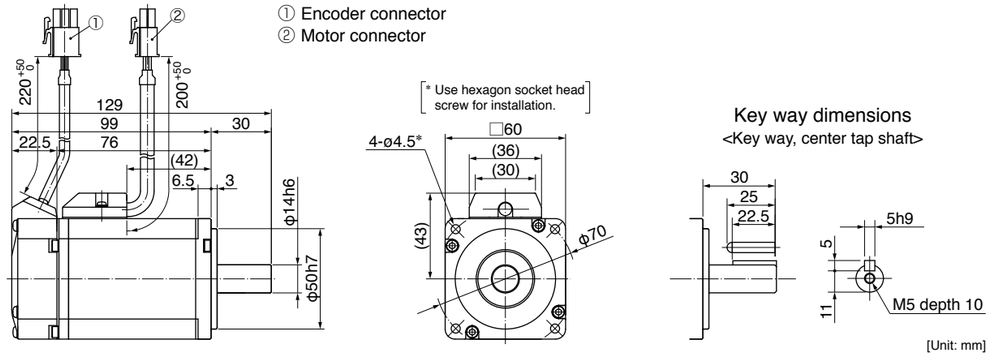

For connector type IP67 motors, refer to P.101. ● For the dimensions with brake, refer to the right page.

<Cautions> Reduce the moment of inertia ratio if high speed response operation is required.
Dimensions are subject to change without notice. Contact us or a dealer for the latest information.
Read the Instruction Manual carefully and understand all precautions and remarks before using the products.

200 V MSMF 400 W [Low inertia 60 mm sq.]

Specifications

			AC200 V
Motor model *1	IP65		MSMF042L1□□
Applicable driver	Model No.	Multifunction type	MBDLT25SF
		RS485 communication type *2	MBDLN25SG
		Basic type *2	MBDLN25SE
	Frame symbol		B-frame
Power supply capacity		(kVA)	0.9
Rated output		(W)	400
Rated torque		(N·m)	1.27
Continuous stall torque		(N·m)	1.27
Momentary Max. peak torque		(N·m)	3.82
Rated current		(A(rms))	2.4
Max. current		(A(o-p))	10.2
Regenerative brake frequency (times/min) Note)1	Without option		No limit Note)2
	DV0P4283		No limit Note)2
Rated rotational speed		(r/min)	3000
Max. rotational speed		(r/min)	6000
Moment of inertia of rotor ($\times 10^{-4}$ kg·m^2)	Without brake		0.27
	With brake		0.30
Recommended moment of inertia ratio of the load and the rotor Note)3			30 times or less
Rotary encoder specifications *3			23-bit Absolute
	Resolution per single turn		8388608

• Brake specifications (For details, refer to P.167)
(This brake will be released when it is energized. Do not use this for braking the motor in motion.)

Static friction torque (N·m)	1.27 or more
Engaging time (ms)	50 or less
Releasing time (ms) Note)4	15 or less
Exciting current (DC) (A)	0.36
Releasing voltage (DC) (V)	1 or more
Exciting voltage (DC) (V)	24±1.2

• Permissible load (For details, refer to P.166)

During assembly	Radial load P-direction (N)	392
	Thrust load A-direction (N)	147
	Thrust load B-direction (N)	196
During operation	Radial load P-direction (N)	245
	Thrust load A, B-direction (N)	98.0

• For details of Note)1 to Note)4, refer to P.165.
• Dimensions of Driver, refer to P.47.
*1 □□ in the motor part number represents the motor specifications.
*2 Basic type and RS485 communication type are "Position control type".
Detail of model designation, refer to P.18.
*3 When using a rotary encoder as an incremental system (not using multi-turn data), do not connect a battery for absolute encoder.

Torque characteristics (at AC200 V of power voltage <Dotted line represents the torque at 10 % less supply voltage.>)

Without oil seal

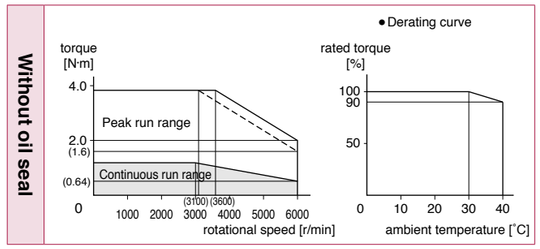

With oil seal

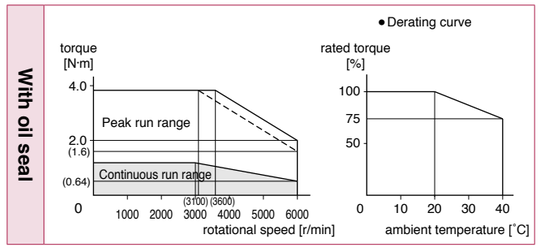

Dimensions

<with brake>

Mass: 1.7 kg

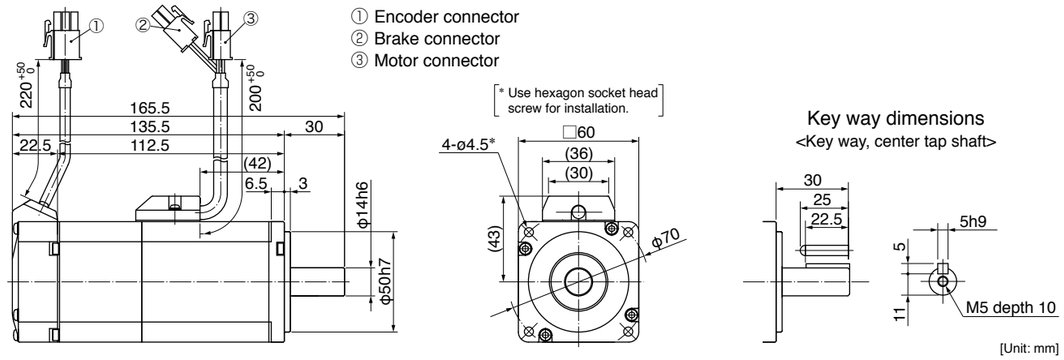

For connector type IP67 motors, refer to P.101. ● For the dimensions without brake, refer to the left page.

<Cautions> Reduce the moment of inertia ratio if high speed response operation is required.
Dimensions are subject to change without notice. Contact us or a dealer for the latest information.
Read the Instruction Manual carefully and understand all precautions and remarks before using the products.

200 V MSMF 750 W [Low inertia 80 mm sq.]

Specifications

			AC200 V
Motor model *1	IP65		MSMF082L1□□
Applicable driver	Model No.	Multifunction type	MCDLT35SF
		RS485 communication type *2	MCDLN35SG
		Basic type *2	MCDLN35SE
	Frame symbol		C-frame
Power supply capacity		(kVA)	1.3
Rated output		(W)	750
Rated torque		(N·m)	2.39
Continuous stall torque		(N·m)	2.39
Momentary Max. peak torque		(N·m)	7.16
Rated current		(A(rms))	4.1
Max. current		(A(o-p))	17.4
Regenerative brake frequency (times/min) Note)1	Without option		No limit Note)2
	DV0P4283		No limit Note)2
Rated rotational speed		(r/min)	3000
Max. rotational speed		(r/min)	6000
Moment of inertia of rotor ($\times 10^{-4}$ kg·m^2)	Without brake		0.96
	With brake		1.06
Recommended moment of inertia ratio of the load and the rotor Note)3			20 times or less
Rotary encoder specifications *3			23-bit Absolute
	Resolution per single turn		8388608

• **Brake specifications** (For details, refer to P.167)
(This brake will be released when it is energized. Do not use this for braking the motor in motion.)

Static friction torque (N·m)	2.45 or more
Engaging time (ms)	70 or less
Releasing time (ms) Note)4	20 or less
Exciting current (DC) (A)	0.42
Releasing voltage (DC) (V)	1 or more
Exciting voltage (DC) (V)	24±1.2

• **Permissible load** (For details, refer to P.166)

During assembly	Radial load P-direction (N)	686
	Thrust load A-direction (N)	294
	Thrust load B-direction (N)	392
During operation	Radial load P-direction (N)	392
	Thrust load A, B-direction (N)	147

• For details of Note)1 to Note)4, refer to P.165.
• Dimensions of Driver, refer to P.48.
*1 □□ in the motor part number represents the motor specifications.
*2 Basic type and RS485 communication type are "Position control type".
Detail of model designation, refer to P.18.
*3 When using a rotary encoder as an incremental system (not using multi-turn data), do not connect a battery for absolute encoder.

Torque characteristics (at AC200 V of power voltage <Dotted line represents the torque at 10 % less supply voltage.>)

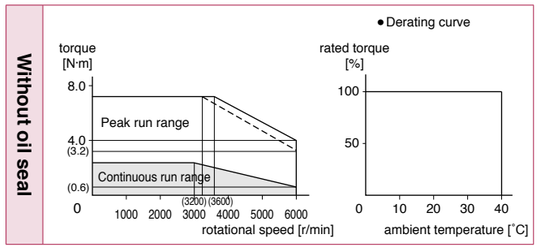

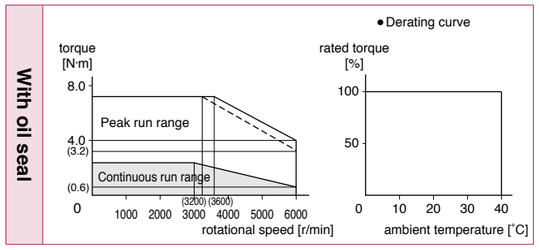

Dimensions

Mass: Without brake: 2.3 kg
With brake: 3.1 kg

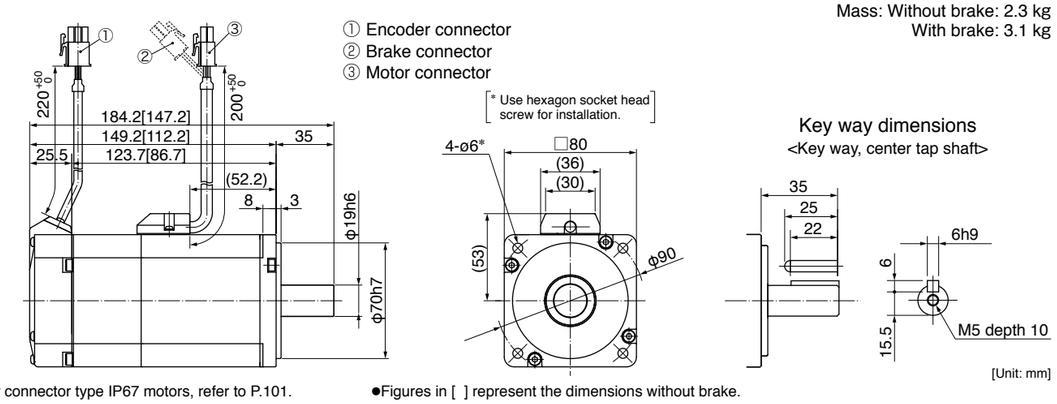

For connector type IP67 motors, refer to P.101. ●Figures in [ ] represent the dimensions without brake.

<Cautions> Reduce the moment of inertia ratio if high speed response operation is required.
Dimensions are subject to change without notice. Contact us or a dealer for the latest information.
Read the Instruction Manual carefully and understand all precautions and remarks before using the products.

200 V MSMF 1000 W [Low inertia 80 mm sq.]

Specifications

			AC200 V
Motor model *1	IP65		MSMF092L1□□
Applicable driver	Model No.	Multifunction type	MDDLT45SF
		RS485 communication type *2	MDDLN45SG
		Basic type *2	MDDLN45SE
	Frame symbol		D-frame
Power supply capacity		(kVA)	1.8
Rated output		(W)	1000
Rated torque		(N·m)	3.18
Continuous stall torque		(N·m)	3.18
Momentary Max. peak torque		(N·m)	9.55
Rated current		(A(rms))	5.7
Max. current		(A(o-p))	24.2
Regenerative brake frequency (times/min) Note)1	Without option		No limit Note)2
	DV0P4284		No limit Note)2
Rated rotational speed		(r/min)	3000
Max. rotational speed		(r/min)	6000
Moment of inertia of rotor ($\times 10^{-4}$ kg·m^2)	Without brake		1.26
	With brake		1.36
Recommended moment of inertia ratio of the load and the rotor Note)3			15 times or less
Rotary encoder specifications *3			23-bit Absolute
	Resolution per single turn		8388608

• **Brake specifications** (For details, refer to P.167)
(This brake will be released when it is energized. Do not use this for braking the motor in motion.)

Static friction torque (N·m)	3.80 or more
Engaging time (ms)	70 or less
Releasing time (ms) Note)4	20 or less
Exciting current (DC) (A)	0.42
Releasing voltage (DC) (V)	1 or more
Exciting voltage (DC) (V)	24±2.4

• **Permissible load** (For details, refer to P.166)

During assembly	Radial load P-direction (N)	686
	Thrust load A-direction (N)	294
	Thrust load B-direction (N)	392
During operation	Radial load P-direction (N)	392
	Thrust load A, B-direction (N)	147

• For details of Note)1 to Note)4, refer to P.165.
• Dimensions of Driver, refer to P.48.
*1 □□ in the motor part number represents the motor specifications.
*2 Basic type and RS485 communication type are "Position control type".
Detail of model designation, refer to P.18.
*3 When using a rotary encoder as an incremental system (not using multi-turn data), do not connect a battery for absolute encoder.

Torque characteristics (at AC200 V of power voltage <Dotted line represents the torque at 10 % less supply voltage.>)

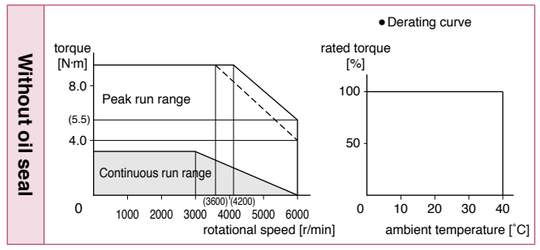

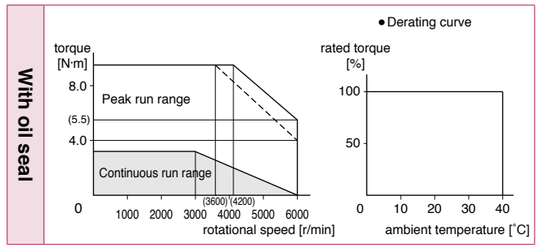

Dimensions

Mass: Without brake: 2.8 kg
With brake: 3.6 kg

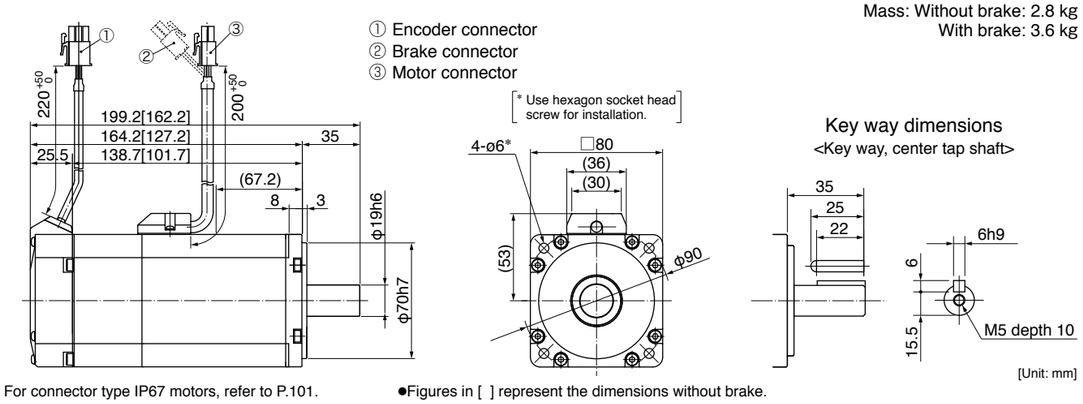

For connector type IP67 motors, refer to P.101. ●Figures in [ ] represent the dimensions without brake.

<Cautions> Reduce the moment of inertia ratio if high speed response operation is required.
Dimensions are subject to change without notice. Contact us or a dealer for the latest information.
Read the Instruction Manual carefully and understand all precautions and remarks before using the products.

200 V MSMF 1.0 kW [Low inertia 100 mm sq.]

Specifications

			AC200 V
Motor model *1	IP67		MSMF102L1□□
Applicable driver	Model No.	Multifunction type	MDDLT55SF
		RS485 communication type *2	MDDLN55SG
		Basic type *2	MDDLN55SE
	Frame symbol		D-frame
Power supply capacity		(kVA)	2.3
Rated output		(W)	1000
Rated torque		(N·m)	3.18
Continuous stall torque		(N·m)	3.82
Momentary Max. peak torque		(N·m)	9.55
Rated current		(A(rms))	6.6
Max. current		(A(o-p))	28
Regenerative brake frequency (times/min) Note)1	Without option		No limit Note)2
	DV0P4284		No limit Note)2
Rated rotational speed		(r/min)	3000
Max. rotational speed		(r/min)	5000
Moment of inertia of rotor ($\times 10^{-4}$ kg·m^2)	Without brake		2.15
	With brake		2.47
Recommended moment of inertia ratio of the load and the rotor Note)3			15 times or less
Rotary encoder specifications *3			23-bit Absolute
	Resolution per single turn		8388608

• **Brake specifications** (For details, refer to P.167)
(This brake will be released when it is energized. Do not use this for braking the motor in motion.)

Static friction torque (N·m)	8.0 or more
Engaging time (ms)	50 or less
Releasing time (ms) Note)4	15 or less
Exciting current (DC) (A)	0.81±10 %
Releasing voltage (DC) (V)	2 or more
Exciting voltage (DC) (V)	24±2.4

• **Permissible load** (For details, refer to P.166)

During assembly	Radial load P-direction (N)	980
	Thrust load A-direction (N)	588
	Thrust load B-direction (N)	686
During operation	Radial load P-direction (N)	490
	Thrust load A, B-direction (N)	196

• For details of Note)1 to Note)4, refer to P.165.
• Dimensions of Driver, refer to P.48.
*1 □□ in the motor part number represents the motor specifications.
*2 Basic type and RS485 communication type are "Position control type".
Detail of model designation, refer to P.18.
*3 When using a rotary encoder as an incremental system (not using multi-turn data), do not connect a battery for absolute encoder.

Torque characteristics (at AC200 V of power voltage <Dotted line represents the torque at 10 % less supply voltage.>)

With oil seal

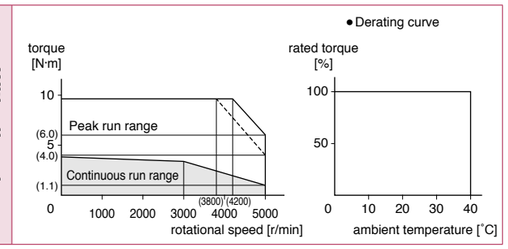

Dimensions

Mass: Without brake: 3.6 kg
With brake: 4.7 kg

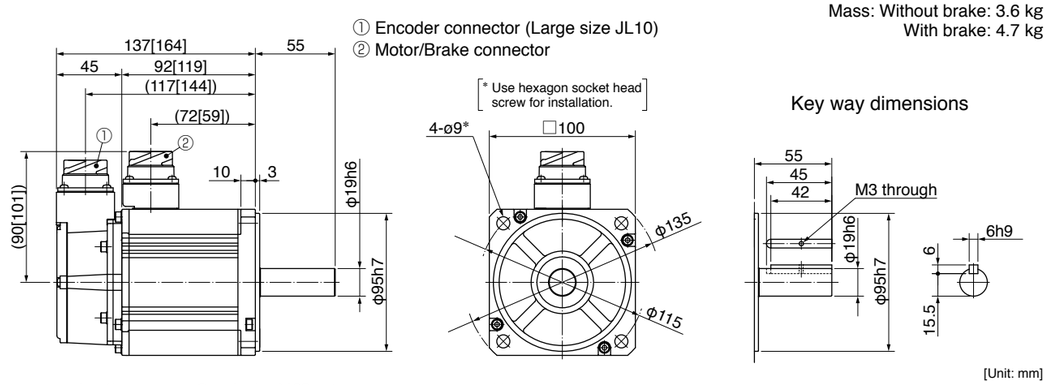

[Unit: mm]

Encoder connector (Small size JN2), refer to P.102. ● Figures in [ ] represent the dimensions with brake.

<Cautions> Reduce the moment of inertia ratio if high speed response operation is required.
Dimensions are subject to change without notice. Contact us or a dealer for the latest information.
Read the Instruction Manual carefully and understand all precautions and remarks before using the products.

200 V MSMF 1.5 kW [Low inertia 100 mm sq.]

Specifications

			AC200 V
Motor model *1	IP67		MSMF152L1□□
Applicable driver	Model No.	Multifunction type	MDDLT55SF
		RS485 communication type *2	MDDLN55SG
		Basic type *2	MDDLN55SE
	Frame symbol		D-frame
Power supply capacity		(kVA)	2.3
Rated output		(W)	1500
Rated torque		(N·m)	4.77
Continuous stall torque		(N·m)	5.72
Momentary Max. peak torque		(N·m)	14.3
Rated current		(A(rms))	8.2
Max. current		(A(o-p))	35
Regenerative brake frequency (times/min) Note)1	Without option		No limit Note)2
	DV0P4284		No limit Note)2
Rated rotational speed		(r/min)	3000
Max. rotational speed		(r/min)	5000
Moment of inertia of rotor ($\times 10^{-4}$ kg·m^2)	Without brake		3.10
	With brake		3.45
Recommended moment of inertia ratio of the load and the rotor Note)3			15 times or less
Rotary encoder specifications *3			23-bit Absolute
	Resolution per single turn		8388608

• **Brake specifications** (For details, refer to P.167)
(This brake will be released when it is energized. Do not use this for braking the motor in motion.)

Static friction torque (N·m)	8.0 or more
Engaging time (ms)	50 or less
Releasing time (ms) Note)4	15 or less
Exciting current (DC) (A)	0.81±10 %
Releasing voltage (DC) (V)	2 or more
Exciting voltage (DC) (V)	24±2.4

• **Permissible load** (For details, refer to P.166)

During assembly	Radial load P-direction (N)	980
	Thrust load A-direction (N)	588
	Thrust load B-direction (N)	686
During operation	Radial load P-direction (N)	490
	Thrust load A, B-direction (N)	196

• For details of Note)1 to Note)4, refer to P.165.
• Dimensions of Driver, refer to P.48.
*1 □□ in the motor part number represents the motor specifications.
*2 Basic type and RS485 communication type are "Position control type".
Detail of model designation, refer to P.18.
*3 When using a rotary encoder as an incremental system (not using multi-turn data), do not connect a battery for absolute encoder.

Torque characteristics (at AC200 V of power voltage <Dotted line represents the torque at 10 % less supply voltage.>)

With oil seal

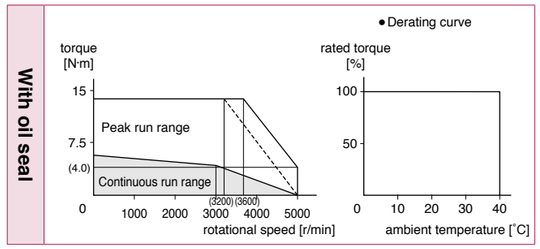

Dimensions

Mass: Without brake: 4.6 kg
With brake: 5.6 kg

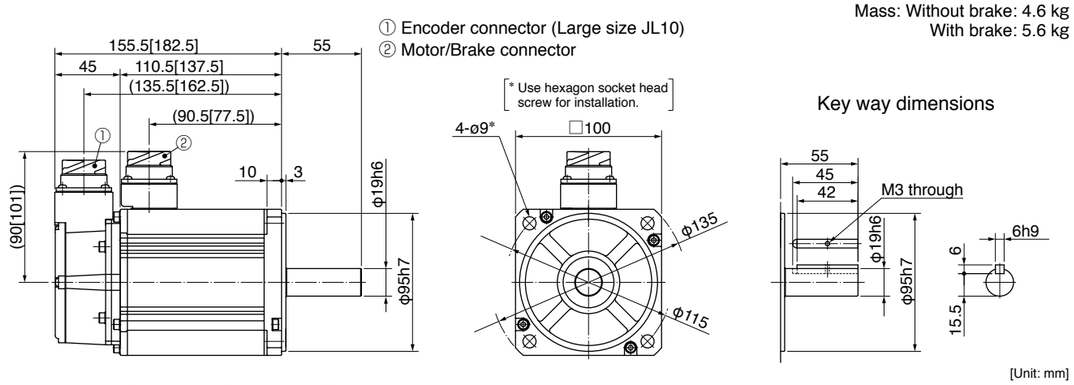

[Unit: mm]

Encoder connector (Small size JN2), refer to P.102. ● Figures in [ ] represent the dimensions with brake.

<Cautions> Reduce the moment of inertia ratio if high speed response operation is required.
Dimensions are subject to change without notice. Contact us or a dealer for the latest information.
Read the Instruction Manual carefully and understand all precautions and remarks before using the products.

200 V MSMF 2.0 kW [Low inertia 100 mm sq.]

Specifications

			AC200 V
Motor model *1	IP67		MSMF202L1□□
Applicable driver	Model No.	Multifunction type	MEDLT83SF
		RS485 communication type *2	MEDLN83SG
		Basic type *2	MEDLN83SE
	Frame symbol		E-frame
Power supply capacity		(kVA)	3.8
Rated output		(W)	2000
Rated torque		(N·m)	6.37
Continuous stall torque		(N·m)	7.64
Momentary Max. peak torque		(N·m)	19.1
Rated current		(A(rms))	11.3
Max. current		(A(o-p))	48
Regenerative brake frequency (times/min) Note)1	Without option		No limit Note)2
	DV0P4285		No limit Note)2
Rated rotational speed		(r/min)	3000
Max. rotational speed		(r/min)	5000
Moment of inertia of rotor ($\times 10^{-4}$ kg·m^2)	Without brake		4.06
	With brake		4.41
Recommended moment of inertia ratio of the load and the rotor Note)3			15 times or less
Rotary encoder specifications *3			23-bit Absolute
	Resolution per single turn		8388608

• **Brake specifications** (For details, refer to P.167)
(This brake will be released when it is energized. Do not use this for braking the motor in motion.)

Static friction torque (N·m)	8.0 or more
Engaging time (ms)	50 or less
Releasing time (ms) Note)4	15 or less
Exciting current (DC) (A)	0.81±10 %
Releasing voltage (DC) (V)	2 or more
Exciting voltage (DC) (V)	24±2.4

• **Permissible load** (For details, refer to P.166)

During assembly	Radial load P-direction (N)	980
	Thrust load A-direction (N)	588
	Thrust load B-direction (N)	686
During operation	Radial load P-direction (N)	490
	Thrust load A, B-direction (N)	196

• For details of Note)1 to Note)4, refer to P.165.
• Dimensions of Driver, refer to P.49.
*1 □□ in the motor part number represents the motor specifications.
*2 Basic type and RS485 communication type are "Position control type".
Detail of model designation, refer to P.18.
*3 When using a rotary encoder as an incremental system (not using multi-turn data), do not connect a battery for absolute encoder.

Torque characteristics (at AC200 V of power voltage <Dotted line represents the torque at 10 % less supply voltage.>)

With oil seal

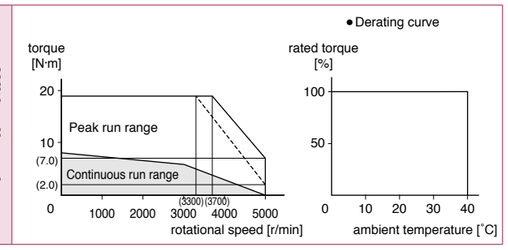

Dimensions

Mass: Without brake: 5.6 kg
With brake: 6.6 kg

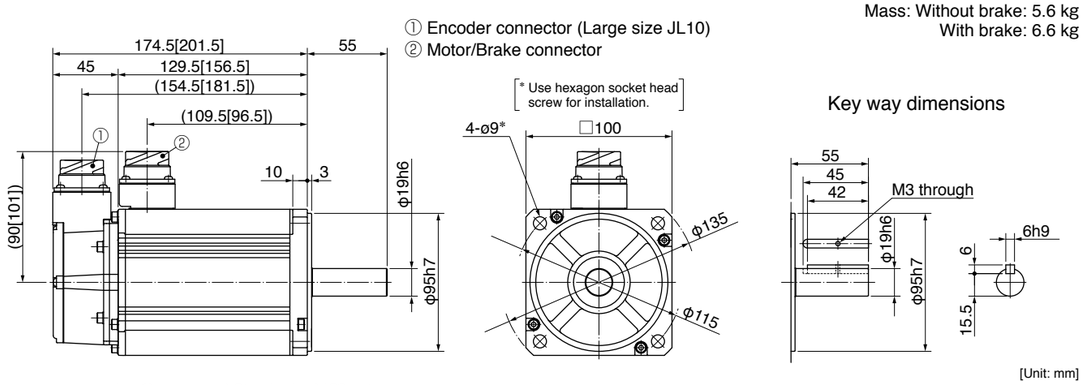

[Unit: mm]

Encoder connector (Small size JN2), refer to P.102. ● Figures in [ ] represent the dimensions with brake.

<Cautions> Reduce the moment of inertia ratio if high speed response operation is required.
Dimensions are subject to change without notice. Contact us or a dealer for the latest information.
Read the Instruction Manual carefully and understand all precautions and remarks before using the products.

200 V MSMF 3.0 kW [Low inertia 120 mm sq.]

Specifications

			AC200 V
Motor model *1	IP67		MSMF302L1□□
Applicable driver	Model No.	Multifunction type	MFDLTA3SF
		RS485 communication type *2	MFDLNA3SG
		Basic type *2	MFDLNA3SE
	Frame symbol		F-frame
Power supply capacity		(kVA)	4.5
Rated output		(W)	3000
Rated torque		(N·m)	9.55
Continuous stall torque		(N·m)	11.0
Momentary Max. peak torque		(N·m)	28.6
Rated current		(A(rms))	18.1
Max. current		(A(o-p))	77
Regenerative brake frequency (times/min) Note)1	Without option		No limit Note)2
	DV0P4285×2		No limit Note)2
Rated rotational speed		(r/min)	3000
Max. rotational speed		(r/min)	5000
Moment of inertia of rotor ($\times 10^{-4}$ kg·m^2)	Without brake		7.04
	With brake		7.38
Recommended moment of inertia ratio of the load and the rotor Note)3			15 times or less
Rotary encoder specifications *3			23-bit Absolute
	Resolution per single turn		8388608

• **Brake specifications** (For details, refer to P.167)
(This brake will be released when it is energized. Do not use this for braking the motor in motion.)

Static friction torque (N·m)	12.0 or more
Engaging time (ms)	80 or less
Releasing time (ms) Note)4	15 or less
Exciting current (DC) (A)	0.81±10 %
Releasing voltage (DC) (V)	2 or more
Exciting voltage (DC) (V)	24±2.4

• **Permissible load** (For details, refer to P.166)

During assembly	Radial load P-direction (N)	980
	Thrust load A-direction (N)	588
	Thrust load B-direction (N)	686
During operation	Radial load P-direction (N)	490
	Thrust load A, B-direction (N)	196

• For details of Note)1 to Note)4, refer to P.165.
• Dimensions of Driver, refer to P.49.
*1 □□ in the motor part number represents the motor specifications.
*2 Basic type and RS485 communication type are "Position control type".
Detail of model designation, refer to P.18.
*3 When using a rotary encoder as an incremental system (not using multi-turn data), do not connect a battery for absolute encoder.

Torque characteristics (at AC200 V of power voltage <Dotted line represents the torque at 10 % less supply voltage.>)

With oil seal

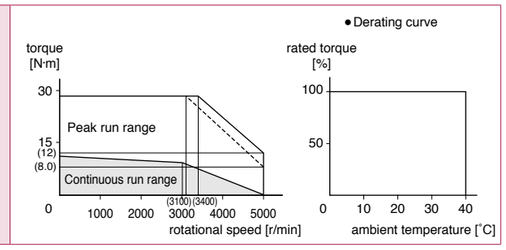

Dimensions

Mass: Without brake: 8.7 kg
With brake: 9.9 kg

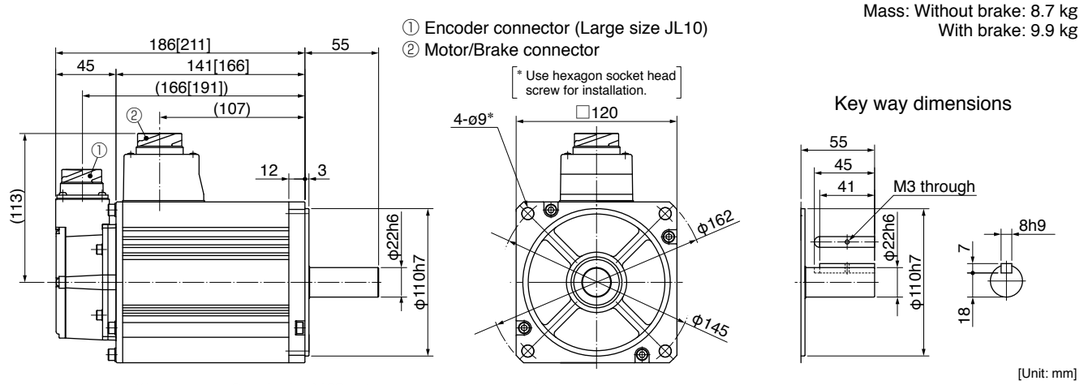

[Unit: mm]

Encoder connector (Small size JN2), refer to P.102. ● Figures in [ ] represent the dimensions with brake.

<Cautions> Reduce the moment of inertia ratio if high speed response operation is required.
Dimensions are subject to change without notice. Contact us or a dealer for the latest information.
Read the Instruction Manual carefully and understand all precautions and remarks before using the products.

200 V MSMF 4.0 kW [Low inertia 130 mm sq.]

Specifications

			AC200 V
Motor model *1	IP67		MSMF402L1□□
Applicable driver	Model No.	Multifunction type	MFDLTB3SF
		RS485 communication type *2	MFDLNB3SG
		Basic type *2	MFDLNB3SE
	Frame symbol		F-frame
Power supply capacity		(kVA)	7.5
Rated output		(W)	4000
Rated torque		(N·m)	12.7
Continuous stall torque		(N·m)	15.2
Momentary Max. peak torque		(N·m)	38.2
Rated current		(A(rms))	19.6
Max. current		(A(o-p))	83
Regenerative brake frequency (times/min) Note)1	Without option		No limit Note)2
	DV0P4285×2		No limit Note)2
Rated rotational speed		(r/min)	3000
Max. rotational speed		(r/min)	4500
Moment of inertia of rotor ($\times 10^{-4}$ kg·m^2)	Without brake		14.4
	With brake		15.6
Recommended moment of inertia ratio of the load and the rotor Note)3			15 times or less
Rotary encoder specifications *3			23-bit Absolute
	Resolution per single turn		8388608

• **Brake specifications** (For details, refer to P.167)
(This brake will be released when it is energized. Do not use this for braking the motor in motion.)

Static friction torque (N·m)	16.2 or more
Engaging time (ms)	110 or less
Releasing time (ms) Note)4	50 or less
Exciting current (DC) (A)	0.90±10 %
Releasing voltage (DC) (V)	2 or more
Exciting voltage (DC) (V)	24±2.4

• **Permissible load** (For details, refer to P.166)

During assembly	Radial load P-direction (N)	980
	Thrust load A-direction (N)	588
	Thrust load B-direction (N)	686
During operation	Radial load P-direction (N)	784
	Thrust load A, B-direction (N)	343

• For details of Note)1 to Note)4, refer to P.165.
• Dimensions of Driver, refer to P.49.
*1 □□ in the motor part number represents the motor specifications.
*2 Basic type and RS485 communication type are "Position control type".
Detail of model designation, refer to P.18.
*3 When using a rotary encoder as an incremental system (not using multi-turn data), do not connect a battery for absolute encoder.

Torque characteristics (at AC200 V of power voltage <Dotted line represents the torque at 10 % less supply voltage.>)

With oil seal

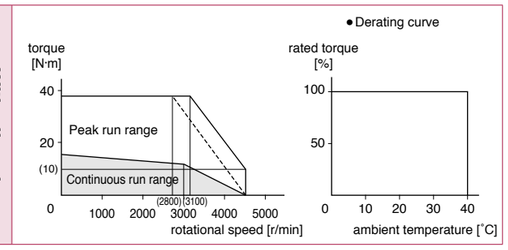

Dimensions

Mass: Without brake: 11.5 kg
With brake: 13.2 kg

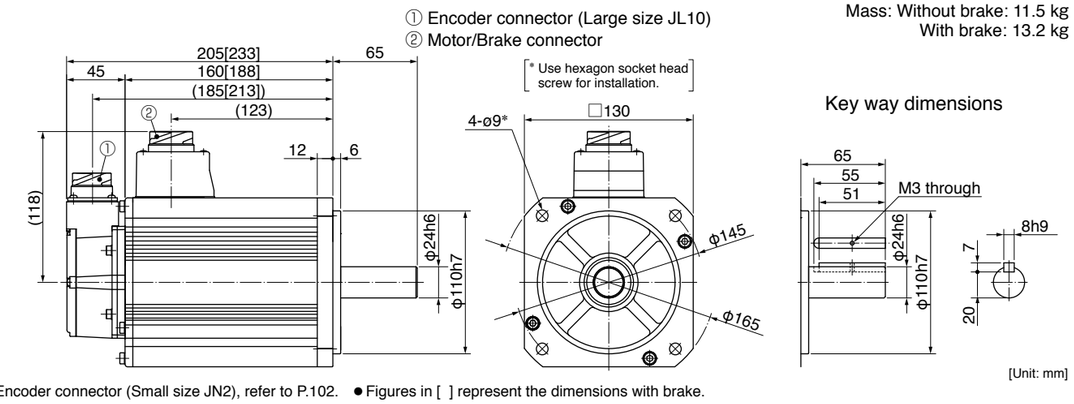

Encoder connector (Small size JN2), refer to P.102. ● Figures in [ ] represent the dimensions with brake.

<Cautions> Reduce the moment of inertia ratio if high speed response operation is required.
Dimensions are subject to change without notice. Contact us or a dealer for the latest information.
Read the Instruction Manual carefully and understand all precautions and remarks before using the products.

200 V MSMF 5.0 kW [Low inertia 130 mm sq.]

Specifications

			AC200 V
Motor model *1	IP67		MSMF502L1□□
Applicable driver	Model No.	Multifunction type	MFDLTB3SF
		RS485 communication type *2	MFDLNB3SG
		Basic type *2	MFDLNB3SE
	Frame symbol		F-frame
Power supply capacity		(kVA)	7.5
Rated output		(W)	5000
Rated torque		(N·m)	15.9
Continuous stall torque		(N·m)	19.1
Momentary Max. peak torque		(N·m)	47.7
Rated current		(A(rms))	24.0
Max. current		(A(o-p))	102
Regenerative brake frequency (times/min) Note)1	Without option		No limit Note)2
	DV0P4285×2		No limit Note)2
Rated rotational speed		(r/min)	3000
Max. rotational speed		(r/min)	4500
Moment of inertia of rotor ($\times 10^{-4}$ kg·m^2)	Without brake		19.0
	With brake		20.2
Recommended moment of inertia ratio of the load and the rotor Note)3			15 times or less
Rotary encoder specifications *3			23-bit Absolute
	Resolution per single turn		8388608

• **Brake specifications** (For details, refer to P.167)
(This brake will be released when it is energized. Do not use this for braking the motor in motion.)

Static friction torque (N·m)	22.0 or more
Engaging time (ms)	110 or less
Releasing time (ms) Note)4	50 or less
Exciting current (DC) (A)	0.90±10 %
Releasing voltage (DC) (V)	2 or more
Exciting voltage (DC) (V)	24±2.4

• **Permissible load** (For details, refer to P.166)

During assembly	Radial load P-direction (N)	980
	Thrust load A-direction (N)	588
	Thrust load B-direction (N)	686
During operation	Radial load P-direction (N)	784
	Thrust load A, B-direction (N)	343

• For details of Note)1 to Note)4, refer to P.165.
• Dimensions of Driver, refer to P.49.
*1 □□ in the motor part number represents the motor specifications.
*2 Basic type and RS485 communication type are "Position control type".
Detail of model designation, refer to P.18.
*3 When using a rotary encoder as an incremental system (not using multi-turn data), do not connect a battery for absolute encoder.

Torque characteristics (at AC200 V of power voltage <Dotted line represents the torque at 10 % less supply voltage.>)

With oil seal

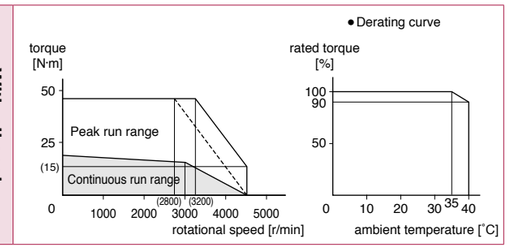

Dimensions

Mass: Without brake: 14.5 kg
With brake: 16.1 kg

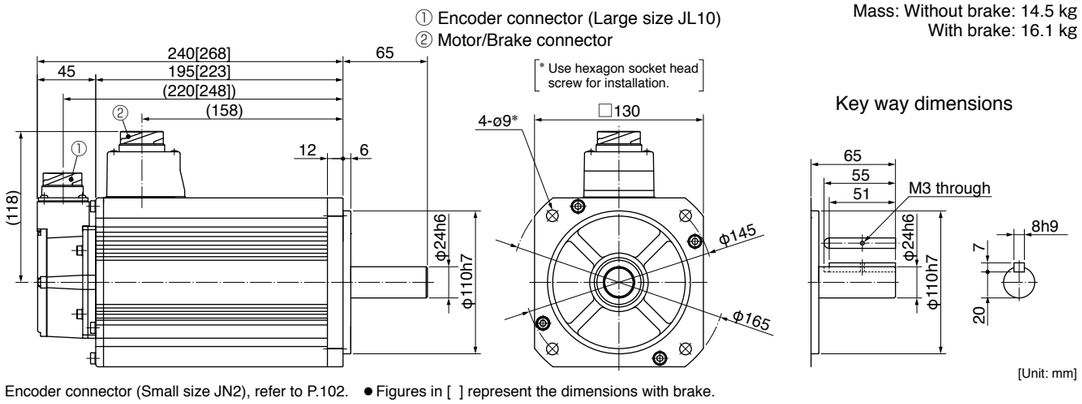

Encoder connector (Small size JN2), refer to P.102. ● Figures in [ ] represent the dimensions with brake.

<Cautions> Reduce the moment of inertia ratio if high speed response operation is required.
Dimensions are subject to change without notice. Contact us or a dealer for the latest information.
Read the Instruction Manual carefully and understand all precautions and remarks before using the products.

100 V MQMF 100 W [Middle inertia Flat type 60 mm sq.]

Specifications

			AC100 V
Motor model *1	IP65		MQMF011L1□□
Applicable driver	Model No.	Multifunction type	MADLT11SF
		RS485 communication type *2	MADLN11SG
		Basic type *2	MADLN11SE
	Frame symbol		A-frame
Power supply capacity		(kVA)	0.4
Rated output		(W)	100
Rated torque		(N·m)	0.32
Continuous stall torque		(N·m)	0.33
Momentary Max. peak torque		(N·m)	1.11
Rated current		(A(rms))	1.6
Max. current		(A(o-p))	7.9
Regenerative brake frequency (times/min) Note)1	Without option		No limit Note)2
	DV0P4280		No limit Note)2
Rated rotational speed		(r/min)	3000
Max. rotational speed		(r/min)	6500
Moment of inertia of rotor ($\times 10^{-4}$ kg·m^2)	Without brake		0.15
	With brake		0.18
Recommended moment of inertia ratio of the load and the rotor Note)3			20 times or less
Rotary encoder specifications *3			23-bit Absolute
	Resolution per single turn		8388608

• **Brake specifications** (For details, refer to P.167)
(This brake will be released when it is energized. Do not use this for braking the motor in motion.)

Static friction torque (N·m)	0.39 or more
Engaging time (ms)	15 or less
Releasing time (ms) Note)4	20 or less
Exciting current (DC) (A)	0.30
Releasing voltage (DC) (V)	1 or more
Exciting voltage (DC) (V)	24±2.4

• **Permissible load** (For details, refer to P.166)

During assembly	Radial load P-direction (N)	147
	Thrust load A-direction (N)	88
	Thrust load B-direction (N)	117.6
During operation	Radial load P-direction (N)	68.6
	Thrust load A, B-direction (N)	58.8

• For details of Note)1 to Note)4, refer to P.165.
• Dimensions of Driver, refer to P.47.
*1 □□ in the motor part number represents the motor specifications.
*2 Basic type and RS485 communication type are "Position control type".
Detail of model designation, refer to P.18.
*3 When using a rotary encoder as an incremental system (not using multi-turn data), do not connect a battery for absolute encoder.

Torque characteristics (at AC100 V of power voltage <Dotted line represents the torque at 10 % less supply voltage.>)

Without oil seal

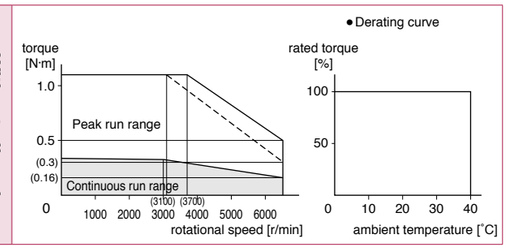

With oil seal

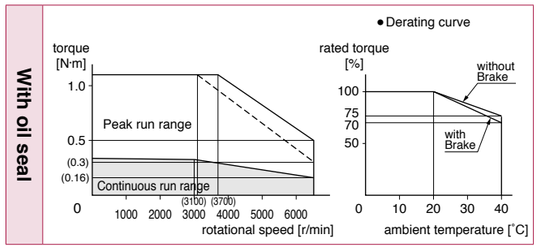

Dimensions

<without brake>

Mass: 0.54 kg (0.57 kg with oil seal)

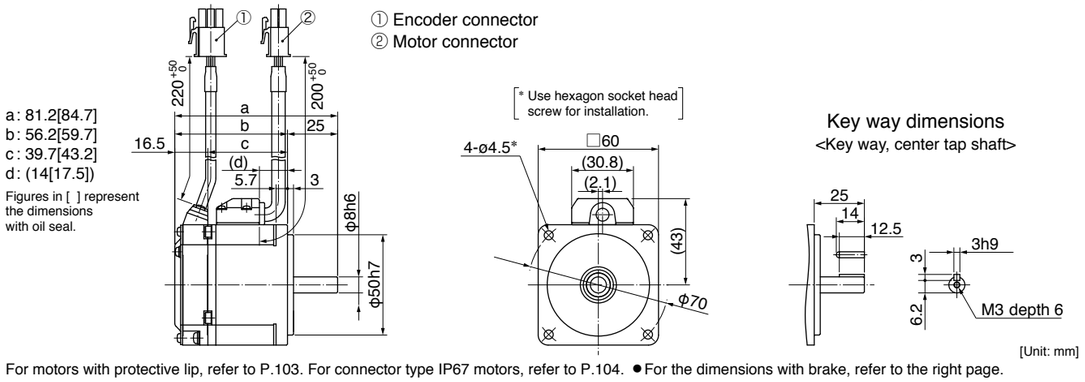

For motors with protective lip, refer to P.103. For connector type IP67 motors, refer to P.104. ●For the dimensions with brake, refer to the right page.

<Cautions> Reduce the moment of inertia ratio if high speed response operation is required.
Dimensions are subject to change without notice. Contact us or a dealer for the latest information.
Read the Instruction Manual carefully and understand all precautions and remarks before using the products.

200 V MQMF 100 W [Middle inertia Flat type 60 mm sq.]

Specifications

			AC200 V
Motor model *1	IP65		MQMF012L1□□
Applicable driver	Model No.	Multifunction type	MADLT05SF
		RS485 communication type *2	MADLN05SG
		Basic type *2	MADLN05SE
	Frame symbol		A-frame
Power supply capacity		(kVA)	0.5
Rated output		(W)	100
Rated torque		(N·m)	0.32
Continuous stall torque		(N·m)	0.33
Momentary Max. peak torque		(N·m)	1.11
Rated current		(A(rms))	1.1
Max. current		(A(o-p))	5.5
Regenerative brake frequency (times/min) Note)1	Without option		No limit Note)2
	DV0P4281		No limit Note)2
Rated rotational speed		(r/min)	3000
Max. rotational speed		(r/min)	6500
Moment of inertia of rotor ($\times 10^{-4}$ kg·m^2)	Without brake		0.15
	With brake		0.18
Recommended moment of inertia ratio of the load and the rotor Note)3			20 times or less
Rotary encoder specifications *3			23-bit Absolute
	Resolution per single turn		8388608

• **Brake specifications** (For details, refer to P.167)
(This brake will be released when it is energized. Do not use this for braking the motor in motion.)

Static friction torque (N·m)	0.39 or more
Engaging time (ms)	15 or less
Releasing time (ms) Note)4	20 or less
Exciting current (DC) (A)	0.30
Releasing voltage (DC) (V)	1 or more
Exciting voltage (DC) (V)	24±2.4

• **Permissible load** (For details, refer to P.166)

During assembly	Radial load P-direction (N)	147
	Thrust load A-direction (N)	88
	Thrust load B-direction (N)	117.6
During operation	Radial load P-direction (N)	68.6
	Thrust load A, B-direction (N)	58.8

• For details of Note)1 to Note)4, refer to P.165.
• Dimensions of Driver, refer to P.47.
*1 □□ in the motor part number represents the motor specifications.
*2 Basic type and RS485 communication type are "Position control type".
Detail of model designation, refer to P.18.
*3 When using a rotary encoder as an incremental system (not using multi-turn data), do not connect a battery for absolute encoder.

Torque characteristics (at AC200 V of power voltage <Dotted line represents the torque at 10 % less supply voltage.>)

Without oil seal

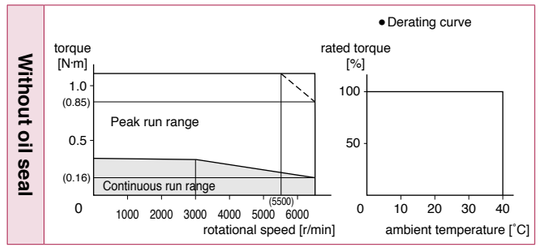

With oil seal

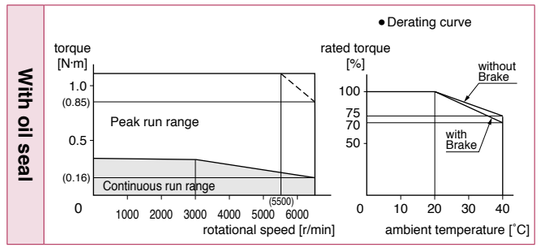

Dimensions

<with brake>

Mass: 0.79 kg (0.82 kg with oil seal)

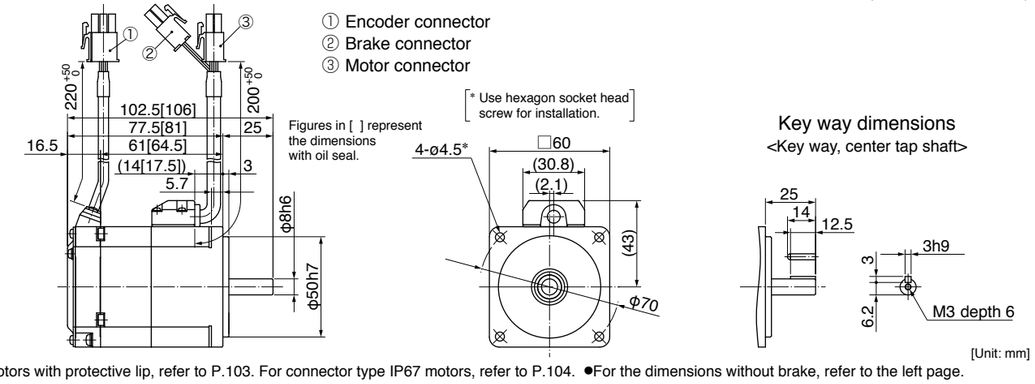

For motors with protective lip, refer to P.103. For connector type IP67 motors, refer to P.104. ●For the dimensions without brake, refer to the left page.

<Cautions> Reduce the moment of inertia ratio if high speed response operation is required.
Dimensions are subject to change without notice. Contact us or a dealer for the latest information.
Read the Instruction Manual carefully and understand all precautions and remarks before using the products.

100 V MQMF 200 W [Middle inertia Flat type 80 mm sq.]

Specifications

			AC100 V
Motor model *1	IP65		MQMF021L1□□
Applicable driver	Model No.	Multifunction type	MBDLT21SF
		RS485 communication type *2	MBDLN21SG
		Basic type *2	MBDLN21SE
	Frame symbol		B-frame
Power supply capacity		(kVA)	0.5
Rated output		(W)	200
Rated torque		(N·m)	0.64
Continuous stall torque		(N·m)	0.76
Momentary Max. peak torque		(N·m)	2.23
Rated current		(A(rms))	2.1
Max. current		(A(o-p))	10.4
Regenerative brake frequency (times/min) Note)1	Without option		No limit Note)2
	DV0P4283		No limit Note)2
Rated rotational speed		(r/min)	3000
Max. rotational speed		(r/min)	6500
Moment of inertia of rotor ($\times 10^{-4}$ kg·m^2)	Without brake		0.50
	With brake		0.59
Recommended moment of inertia ratio of the load and the rotor Note)3			20 times or less
Rotary encoder specifications *3			23-bit Absolute
	Resolution per single turn		8388608

• **Brake specifications** (For details, refer to P.167)
(This brake will be released when it is energized. Do not use this for braking the motor in motion.)

Static friction torque (N·m)	1.6 or more
Engaging time (ms)	70 or less
Releasing time (ms) Note)4	20 or less
Exciting current (DC) (A)	0.36
Releasing voltage (DC) (V)	1 or more
Exciting voltage (DC) (V)	24±2.4

• **Permissible load** (For details, refer to P.166)

During assembly	Radial load P-direction (N)	392
	Thrust load A-direction (N)	147
	Thrust load B-direction (N)	196
During operation	Radial load P-direction (N)	245
	Thrust load A, B-direction (N)	98

• For details of Note)1 to Note)4, refer to P.165.
• Dimensions of Driver, refer to P.47.
*1 □□ in the motor part number represents the motor specifications.
*2 Basic type and RS485 communication type are "Position control type".
Detail of model designation, refer to P.18.
*3 When using a rotary encoder as an incremental system (not using multi-turn data), do not connect a battery for absolute encoder.

Torque characteristics (at AC100 V of power voltage <Dotted line represents the torque at 10 % less supply voltage.>)

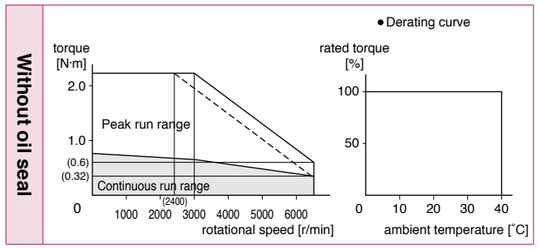

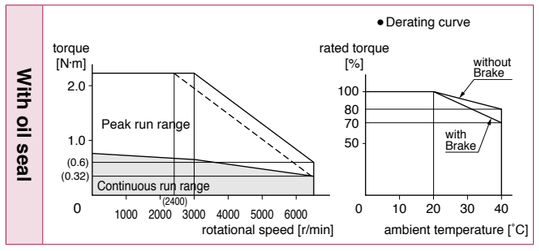

Dimensions

<without brake>

Mass: 1.1 kg (1.2 kg with oil seal)

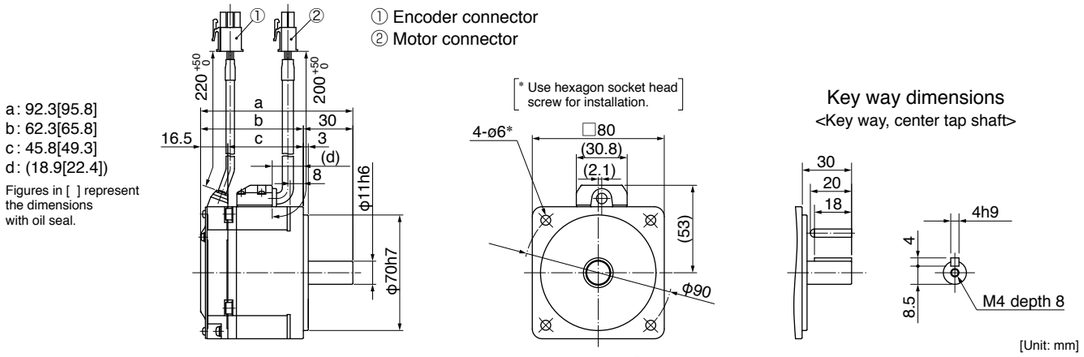

For motors with protective lip, refer to P.103. For connector type IP67 motors, refer to P.104. ● For the dimensions with brake, refer to the right page.

<Cautions> Reduce the moment of inertia ratio if high speed response operation is required.
Dimensions are subject to change without notice. Contact us or a dealer for the latest information.
Read the Instruction Manual carefully and understand all precautions and remarks before using the products.

200 V MQMF 200 W [Middle inertia Flat type 80 mm sq.]

Specifications

			AC200 V
Motor model *1	IP65		MQMF022L1□□
Applicable driver	Model No.	Multifunction type	MADLT15SF
		RS485 communication type *2	MADLN15SG
		Basic type *2	MADLN15SE
	Frame symbol		A-frame
Power supply capacity		(kVA)	0.5
Rated output		(W)	200
Rated torque		(N·m)	0.64
Continuous stall torque		(N·m)	0.76
Momentary Max. peak torque		(N·m)	2.23
Rated current		(A(rms))	1.4
Max. current		(A(o-p))	6.9
Regenerative brake frequency (times/min) Note)1	Without option		No limit Note)2
	DV0P4283		No limit Note)2
Rated rotational speed		(r/min)	3000
Max. rotational speed		(r/min)	6500
Moment of inertia of rotor ($\times 10^{-4}$ kg·m^2)	Without brake		0.50
	With brake		0.59
Recommended moment of inertia ratio of the load and the rotor Note)3			20 times or less
Rotary encoder specifications *3			23-bit Absolute
	Resolution per single turn		8388608

• **Brake specifications** (For details, refer to P.167)
(This brake will be released when it is energized. Do not use this for braking the motor in motion.)

Static friction torque (N·m)	1.6 or more
Engaging time (ms)	70 or less
Releasing time (ms) Note)4	20 or less
Exciting current (DC) (A)	0.36
Releasing voltage (DC) (V)	1 or more
Exciting voltage (DC) (V)	24±2.4

• **Permissible load** (For details, refer to P.166)

During assembly	Radial load P-direction (N)	392
	Thrust load A-direction (N)	147
	Thrust load B-direction (N)	196
During operation	Radial load P-direction (N)	245
	Thrust load A, B-direction (N)	98

• For details of Note)1 to Note)4, refer to P.165.
• Dimensions of Driver, refer to P.47.
*1 □□ in the motor part number represents the motor specifications.
*2 Basic type and RS485 communication type are "Position control type".
Detail of model designation, refer to P.18.
*3 When using a rotary encoder as an incremental system (not using multi-turn data), do not connect a battery for absolute encoder.

Torque characteristics (at AC200 V of power voltage <Dotted line represents the torque at 10 % less supply voltage.>)

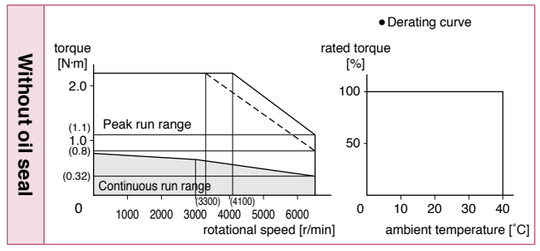

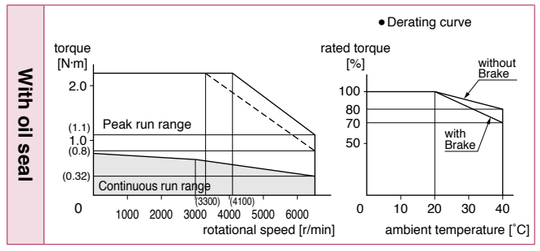

Dimensions

<with brake>

Mass: 1.5 kg (1.6 kg with oil seal)

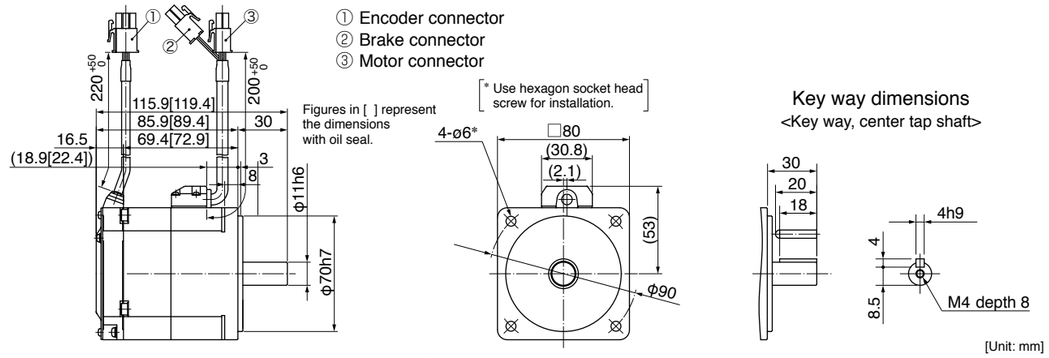

For motors with protective lip, refer to P.103. For connector type IP67 motors, refer to P.104. ● For the dimensions without brake, refer to the left page.

<Cautions> Reduce the moment of inertia ratio if high speed response operation is required.
Dimensions are subject to change without notice. Contact us or a dealer for the latest information.
Read the Instruction Manual carefully and understand all precautions and remarks before using the products.

100 V MQMF 400 W [Middle inertia Flat type 80 mm sq.]

Specifications

			AC100 V
Motor model *1	IP65		MQMF041L1□□
Applicable driver	Model No.	Multifunction type	MCDLT31SF
		RS485 communication type *2	MCDLN31SG
		Basic type *2	MCDLN31SE
	Frame symbol		C-frame
Power supply capacity		(kVA)	0.9
Rated output		(W)	400
Rated torque		(N·m)	1.27
Continuous stall torque		(N·m)	1.40
Momentary Max. peak torque		(N·m)	4.46
Rated current		(A(rms))	4.1
Max. current		(A(o-p))	20.3
Regenerative brake frequency (times/min) Note)1	Without option		No limit Note)2
	DV0P4282		No limit Note)2
Rated rotational speed		(r/min)	3000
Max. rotational speed		(r/min)	6500
Moment of inertia of rotor ($\times 10^{-4}$ kg·m^2)	Without brake		0.98
	With brake		1.06
Recommended moment of inertia ratio of the load and the rotor Note)3			20 times or less
Rotary encoder specifications *3			23-bit Absolute
	Resolution per single turn		8388608

• **Brake specifications** (For details, refer to P.167)
(This brake will be released when it is energized. Do not use this for braking the motor in motion.)

Static friction torque (N·m)	1.6 or more
Engaging time (ms)	70 or less
Releasing time (ms) Note)4	20 or less
Exciting current (DC) (A)	0.36
Releasing voltage (DC) (V)	1 or more
Exciting voltage (DC) (V)	24±2.4

• **Permissible load** (For details, refer to P.166)

During assembly	Radial load P-direction (N)	392
	Thrust load A-direction (N)	147
	Thrust load B-direction (N)	196
During operation	Radial load P-direction (N)	245
	Thrust load A, B-direction (N)	98

• For details of Note)1 to Note)4, refer to P.165.
• Dimensions of Driver, refer to P.48.
*1 □□ in the motor part number represents the motor specifications.
*2 Basic type and RS485 communication type are "Position control type".
Detail of model designation, refer to P.18.
*3 When using a rotary encoder as an incremental system (not using multi-turn data), do not connect a battery for absolute encoder.

Torque characteristics (at AC100 V of power voltage <Dotted line represents the torque at 10 % less supply voltage.>)

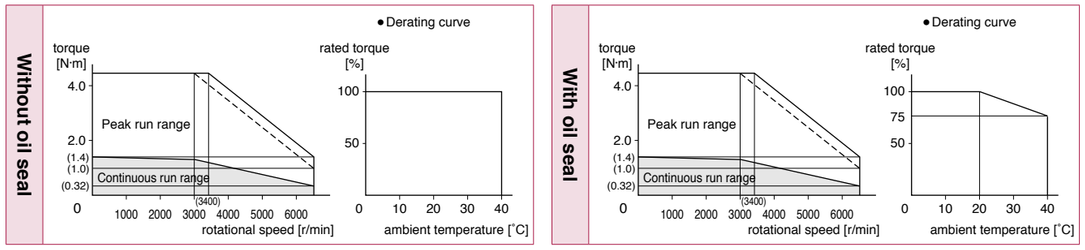

Dimensions

<without brake>

Mass: 1.5 kg (1.6 kg with oil seal)

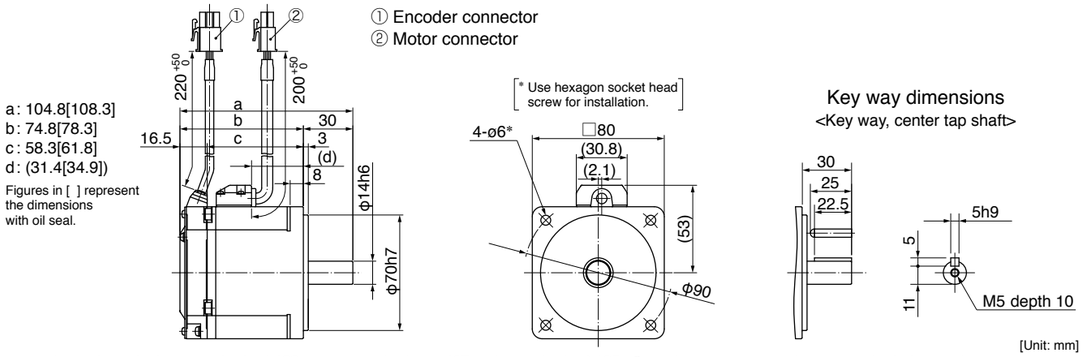

For motors with protective lip, refer to P.103. For connector type IP67 motors, refer to P.105. ● For the dimensions with brake, refer to the right page.

<Cautions> Reduce the moment of inertia ratio if high speed response operation is required.
Dimensions are subject to change without notice. Contact us or a dealer for the latest information.
Read the Instruction Manual carefully and understand all precautions and remarks before using the products.

200 V MQMF 400 W [Middle inertia Flat type 80 mm sq.]

Specifications

			AC200 V
Motor model *1	IP65		MQMF042L1□□
Applicable driver	Model No.	Multifunction type	MBDLT25SF
		RS485 communication type *2	MBDLN25SG
		Basic type *2	MBDLN25SE
	Frame symbol		B-frame
Power supply capacity		(kVA)	0.9
Rated output		(W)	400
Rated torque		(N·m)	1.27
Continuous stall torque		(N·m)	1.40
Momentary Max. peak torque		(N·m)	4.46
Rated current		(A(rms))	2.1
Max. current		(A(o-p))	10.4
Regenerative brake frequency (times/min) Note)1	Without option		No limit Note)2
	DV0P4283		No limit Note)2
Rated rotational speed		(r/min)	3000
Max. rotational speed		(r/min)	6500
Moment of inertia of rotor ($\times 10^{-4}$ kg·m^2)	Without brake		0.98
	With brake		1.06
Recommended moment of inertia ratio of the load and the rotor Note)3			20 times or less
Rotary encoder specifications *3			23-bit Absolute
	Resolution per single turn		8388608

• **Brake specifications** (For details, refer to P.167)
(This brake will be released when it is energized. Do not use this for braking the motor in motion.)

Static friction torque (N·m)	1.6 or more
Engaging time (ms)	70 or less
Releasing time (ms) Note)4	20 or less
Exciting current (DC) (A)	0.36
Releasing voltage (DC) (V)	1 or more
Exciting voltage (DC) (V)	24±2.4

• **Permissible load** (For details, refer to P.166)

During assembly	Radial load P-direction (N)	392
	Thrust load A-direction (N)	147
	Thrust load B-direction (N)	196
During operation	Radial load P-direction (N)	245
	Thrust load A, B-direction (N)	98

• For details of Note)1 to Note)4, refer to P.165.
• Dimensions of Driver, refer to P.47.
*1 □□ in the motor part number represents the motor specifications.
*2 Basic type and RS485 communication type are "Position control type".
Detail of model designation, refer to P.18.
*3 When using a rotary encoder as an incremental system (not using multi-turn data), do not connect a battery for absolute encoder.

Torque characteristics (at AC200 V of power voltage <Dotted line represents the torque at 10 % less supply voltage.>)

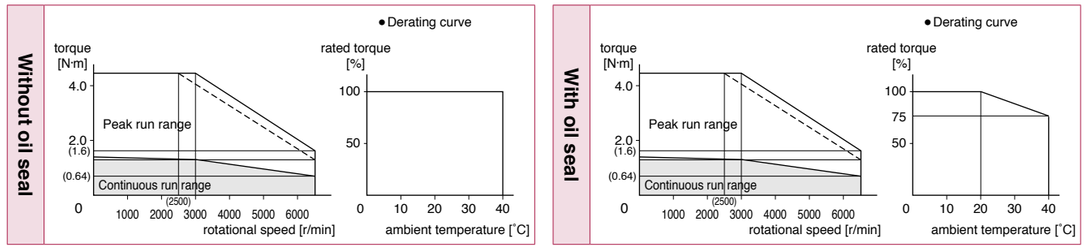

Dimensions

<with brake>

Mass: 2.0 kg (2.1 kg with oil seal)

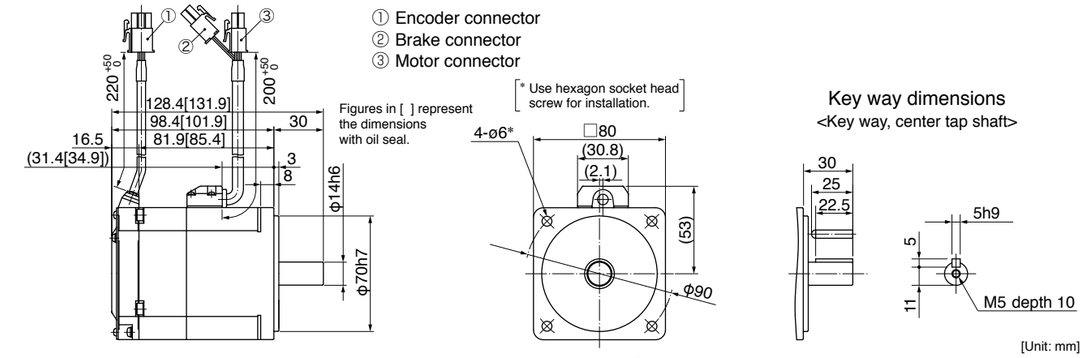

For motors with protective lip, refer to P.103. For connector type IP67 motors, refer to P.105. ● For the dimensions without brake, refer to the left page.

<Cautions> Reduce the moment of inertia ratio if high speed response operation is required.
Dimensions are subject to change without notice. Contact us or a dealer for the latest information.
Read the Instruction Manual carefully and understand all precautions and remarks before using the products.

100 V MHMF 50 W [High inertia 40 mm sq.]

Specifications

			AC100 V
Motor model *1	IP65		MHMF5AZL1□□
Applicable driver	Model No.	Multifunction type	MADLT01SF
		RS485 communication type *2	MADLN01SG
		Basic type *2	MADLN01SE
	Frame symbol		A-frame
Power supply capacity (kVA)			0.4
Rated output (W)			50
Rated torque (N·m)			0.16
Continuous stall torque (N·m)			0.18
Momentary Max. peak torque (N·m)			0.56
Rated current (A(rms))			1.1
Max. current (A(o-p))			5.5
Regenerative brake frequency (times/min) Note)1	Without option		No limit Note)2
	DV0P4280		No limit Note)2
Rated rotational speed (r/min)			3000
Max. rotational speed (r/min)			6500
Moment of inertia of rotor ($\times 10^{-4}$ kg·m^2)	Without brake		0.038
	With brake		0.042
Recommended moment of inertia ratio of the load and the rotor Note)3			30 times or less
Rotary encoder specifications *3			23-bit Absolute
	Resolution per single turn		8388608

• **Brake specifications** (For details, refer to P.167)
(This brake will be released when it is energized. Do not use this for braking the motor in motion.)

Static friction torque (N·m)	0.38 or more
Engaging time (ms)	35 or less
Releasing time (ms) Note)4	20 or less
Exciting current (DC) (A)	0.30
Releasing voltage (DC) (V)	1 or more
Exciting voltage (DC) (V)	24±2.4

• **Permissible load** (For details, refer to P.166)

During assembly	Radial load P-direction (N)	147
	Thrust load A-direction (N)	88
	Thrust load B-direction (N)	117.6
During operation	Radial load P-direction (N)	68.6
	Thrust load A, B-direction (N)	49

• For details of Note)1 to Note)4, refer to P.165.
• Dimensions of Driver, refer to P.47.
*1 □□ in the motor part number represents the motor specifications.
*2 Basic type and RS485 communication type are "Position control type".
Detail of model designation, refer to P.18.
*3 When using a rotary encoder as an incremental system (not using multi-turn data), do not connect a battery for absolute encoder.

Torque characteristics (at AC100 V of power voltage <Dotted line represents the torque at 10 % less supply voltage.>)

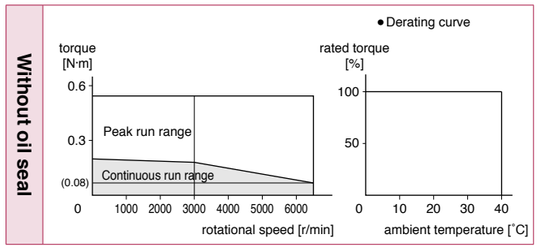

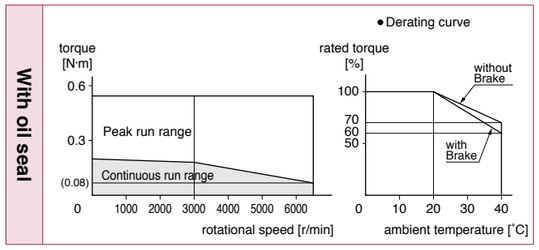

Dimensions

<without brake>

Mass: 0.29 kg (0.31 kg with oil seal)

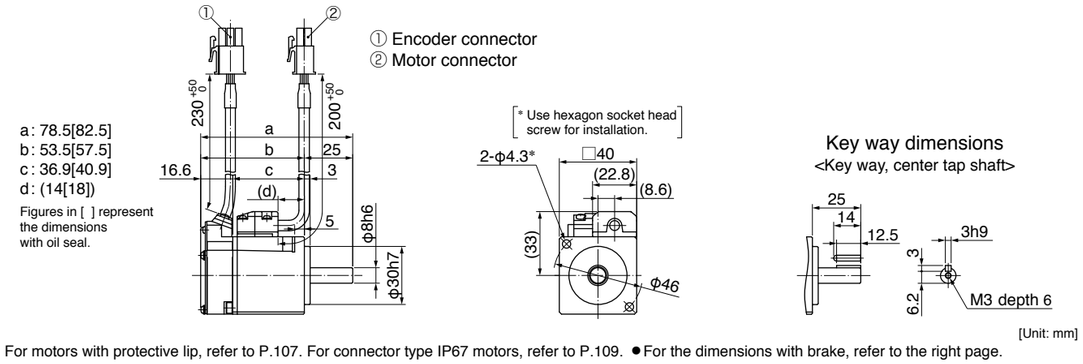

[Unit: mm]

For motors with protective lip, refer to P.107. For connector type IP67 motors, refer to P.109. ●For the dimensions with brake, refer to the right page.

<Cautions> Reduce the moment of inertia ratio if high speed response operation is required.
Dimensions are subject to change without notice. Contact us or a dealer for the latest information.
Read the Instruction Manual carefully and understand all precautions and remarks before using the products.

200 V MHMF 50 W [High inertia 40 mm sq.]

Specifications

			AC200 V
Motor model *1	IP65		MHMF5AZL1□□
Applicable driver	Model No.	Multifunction type	MADLT05SF
		RS485 communication type *2	MADLN05SG
		Basic type *2	MADLN05SE
	Frame symbol		A-frame
Power supply capacity (kVA)			0.5
Rated output (W)			50
Rated torque (N·m)			0.16
Continuous stall torque (N·m)			0.18
Momentary Max. peak torque (N·m)			0.56
Rated current (A(rms))			1.1
Max. current (A(o-p))			5.5
Regenerative brake frequency (times/min) Note)1	Without option		No limit Note)2
	DV0P4281		No limit Note)2
Rated rotational speed (r/min)			3000
Max. rotational speed (r/min)			6500
Moment of inertia of rotor ($\times 10^{-4}$ kg·m^2)	Without brake		0.038
	With brake		0.042
Recommended moment of inertia ratio of the load and the rotor Note)3			30 times or less
Rotary encoder specifications *3			23-bit Absolute
	Resolution per single turn		8388608

• **Brake specifications** (For details, refer to P.167)
(This brake will be released when it is energized. Do not use this for braking the motor in motion.)

Static friction torque (N·m)	0.38 or more
Engaging time (ms)	35 or less
Releasing time (ms) Note)4	20 or less
Exciting current (DC) (A)	0.30
Releasing voltage (DC) (V)	1 or more
Exciting voltage (DC) (V)	24±2.4

• **Permissible load** (For details, refer to P.166)

During assembly	Radial load P-direction (N)	147
	Thrust load A-direction (N)	88
	Thrust load B-direction (N)	117.6
During operation	Radial load P-direction (N)	68.6
	Thrust load A, B-direction (N)	49

• For details of Note)1 to Note)4, refer to P.165.
• Dimensions of Driver, refer to P.47.
*1 □□ in the motor part number represents the motor specifications.
*2 Basic type and RS485 communication type are "Position control type".
Detail of model designation, refer to P.18.
*3 When using a rotary encoder as an incremental system (not using multi-turn data), do not connect a battery for absolute encoder.

Torque characteristics (at AC200 V of power voltage <Dotted line represents the torque at 10 % less supply voltage.>)

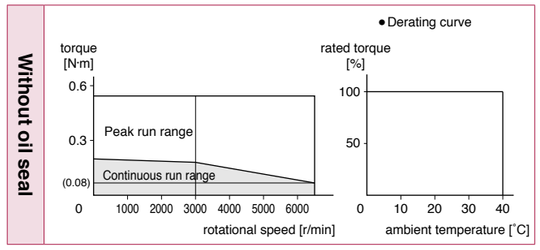

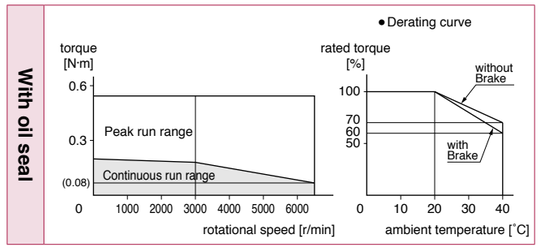

Dimensions

<with brake>

Mass: 0.51 kg (0.53 kg with oil seal)

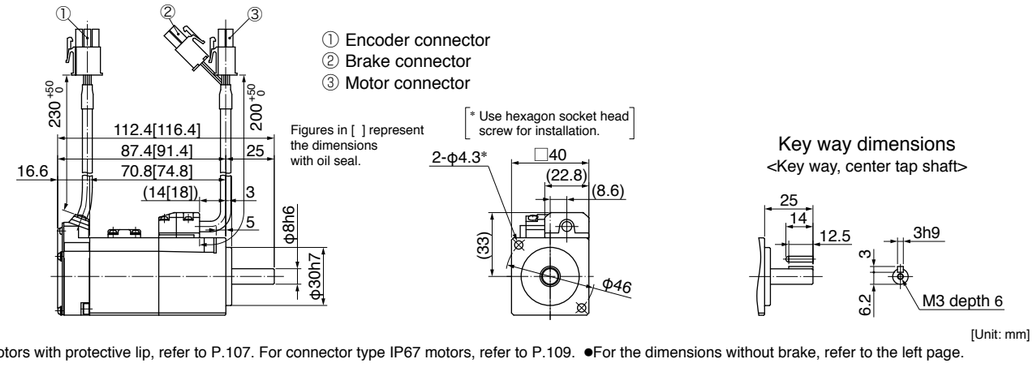

[Unit: mm]

For motors with protective lip, refer to P.107. For connector type IP67 motors, refer to P.109. ●For the dimensions without brake, refer to the left page.

<Cautions> Reduce the moment of inertia ratio if high speed response operation is required.
Dimensions are subject to change without notice. Contact us or a dealer for the latest information.
Read the Instruction Manual carefully and understand all precautions and remarks before using the products.

100 V MHMF 100 W [High inertia 40 mm sq.]

Specifications

			AC100 V
Motor model *1	IP65		MHMF011L1□□
Applicable driver	Model No.	Multifunction type	MADLT11SF
		RS485 communication type *2	MADLN11SG
		Basic type *2	MADLN11SE
	Frame symbol		A-frame
Power supply capacity		(kVA)	0.4
Rated output		(W)	100
Rated torque		(N·m)	0.32
Continuous stall torque		(N·m)	0.33
Momentary Max. peak torque		(N·m)	1.11
Rated current		(A(rms))	1.6
Max. current		(A(o-p))	7.9
Regenerative brake frequency (times/min) Note)1	Without option		No limit Note)2
	DV0P4280		No limit Note)2
Rated rotational speed		(r/min)	3000
Max. rotational speed		(r/min)	6500
Moment of inertia of rotor ($\times 10^{-4}$ kg·m^2)	Without brake		0.071
	With brake		0.074
Recommended moment of inertia ratio of the load and the rotor Note)3			30 times or less
Rotary encoder specifications *3			23-bit Absolute
	Resolution per single turn		8388608

• **Brake specifications** (For details, refer to P.167)
(This brake will be released when it is energized. Do not use this for braking the motor in motion.)

Static friction torque (N·m)	0.38 or more
Engaging time (ms)	35 or less
Releasing time (ms) Note)4	20 or less
Exciting current (DC) (A)	0.30
Releasing voltage (DC) (V)	1 or more
Exciting voltage (DC) (V)	24±2.4

• **Permissible load** (For details, refer to P.166)

During assembly	Radial load P-direction (N)	147
	Thrust load A-direction (N)	88
	Thrust load B-direction (N)	117.6
During operation	Radial load P-direction (N)	68.6
	Thrust load A, B-direction (N)	58.8

• For details of Note)1 to Note)4, refer to P.165.
• Dimensions of Driver, refer to P.47.
*1 □□ in the motor part number represents the motor specifications.
*2 Basic type and RS485 communication type are "Position control type".
Detail of model designation, refer to P.18.
*3 When using a rotary encoder as an incremental system (not using multi-turn data), do not connect a battery for absolute encoder.

Torque characteristics (at AC100 V of power voltage <Dotted line represents the torque at 10 % less supply voltage.>)

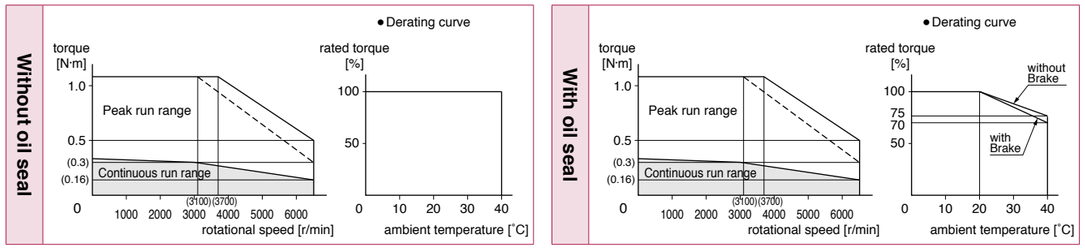

Dimensions

<without brake>

Mass: 0.40 kg (0.42 kg with oil seal)

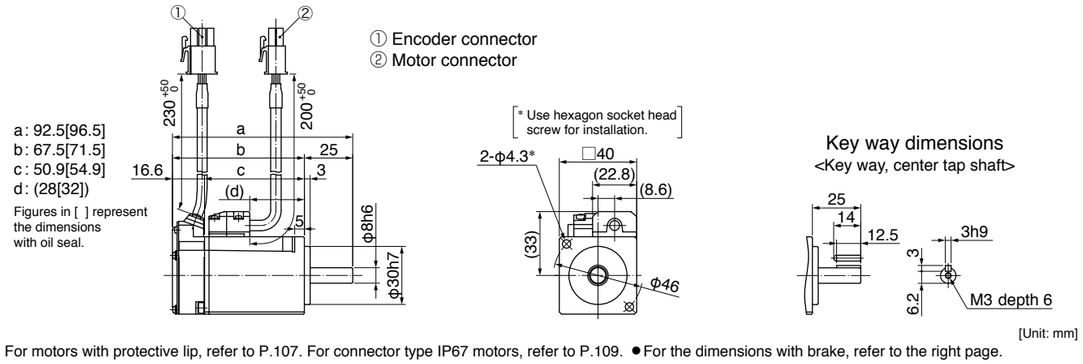

For motors with protective lip, refer to P.107. For connector type IP67 motors, refer to P.109. ● For the dimensions with brake, refer to the right page.

<Cautions> Reduce the moment of inertia ratio if high speed response operation is required.
Dimensions are subject to change without notice. Contact us or a dealer for the latest information.
Read the Instruction Manual carefully and understand all precautions and remarks before using the products.

200 V MHMF 100 W [High inertia 40 mm sq.]

Specifications

			AC200 V
Motor model *1	IP65		MHMF012L1□□
Applicable driver	Model No.	Multifunction type	MADLT05SF
		RS485 communication type *2	MADLN05SG
		Basic type *2	MADLN05SE
	Frame symbol		A-frame
Power supply capacity		(kVA)	0.5
Rated output		(W)	100
Rated torque		(N·m)	0.32
Continuous stall torque		(N·m)	0.33
Momentary Max. peak torque		(N·m)	1.11
Rated current		(A(rms))	1.1
Max. current		(A(o-p))	5.5
Regenerative brake frequency (times/min) Note)1	Without option		No limit Note)2
	DV0P4281		No limit Note)2
Rated rotational speed		(r/min)	3000
Max. rotational speed		(r/min)	6500
Moment of inertia of rotor ($\times 10^{-4}$ kg·m^2)	Without brake		0.071
	With brake		0.074
Recommended moment of inertia ratio of the load and the rotor Note)3			30 times or less
Rotary encoder specifications *3			23-bit Absolute
	Resolution per single turn		8388608

• **Brake specifications** (For details, refer to P.167)
(This brake will be released when it is energized. Do not use this for braking the motor in motion.)

Static friction torque (N·m)	0.38 or more
Engaging time (ms)	35 or less
Releasing time (ms) Note)4	20 or less
Exciting current (DC) (A)	0.30
Releasing voltage (DC) (V)	1 or more
Exciting voltage (DC) (V)	24±2.4

• **Permissible load** (For details, refer to P.166)

During assembly	Radial load P-direction (N)	147
	Thrust load A-direction (N)	88
	Thrust load B-direction (N)	117.6
During operation	Radial load P-direction (N)	68.6
	Thrust load A, B-direction (N)	58.8

• For details of Note)1 to Note)4, refer to P.165.
• Dimensions of Driver, refer to P.47.
*1 □□ in the motor part number represents the motor specifications.
*2 Basic type and RS485 communication type are "Position control type".
Detail of model designation, refer to P.18.
*3 When using a rotary encoder as an incremental system (not using multi-turn data), do not connect a battery for absolute encoder.

Torque characteristics (at AC200 V of power voltage <Dotted line represents the torque at 10 % less supply voltage.>)

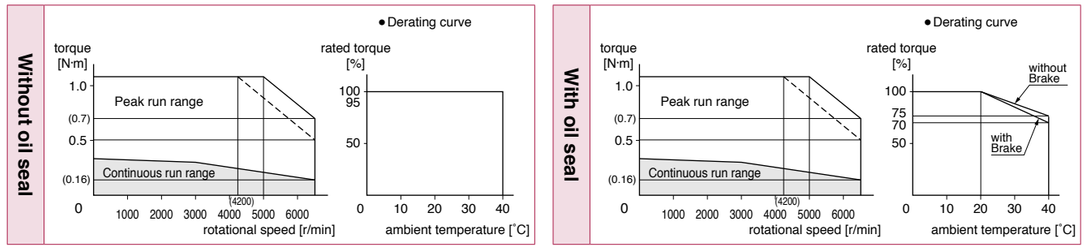

Dimensions

<with brake>

Mass: 0.62 kg (0.64 kg with oil seal)

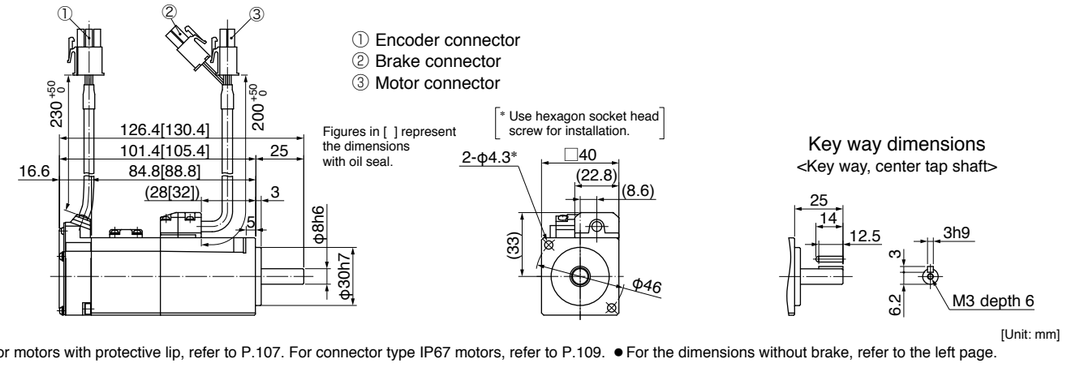

For motors with protective lip, refer to P.107. For connector type IP67 motors, refer to P.109. ● For the dimensions without brake, refer to the left page.

<Cautions> Reduce the moment of inertia ratio if high speed response operation is required.
Dimensions are subject to change without notice. Contact us or a dealer for the latest information.
Read the Instruction Manual carefully and understand all precautions and remarks before using the products.

100 V MHMF 200 W [High inertia 60 mm sq.]

Specifications

			AC100 V
Motor model *1	IP65		MHMF021L1□□
Applicable driver	Model No.	Multifunction type	MBDLT21SF
		RS485 communication type *2	MBDLN21SG
		Basic type *2	MBDLN21SE
	Frame symbol		B-frame
Power supply capacity		(kVA)	0.5
Rated output		(W)	200
Rated torque		(N·m)	0.64
Continuous stall torque		(N·m)	0.76
Momentary Max. peak torque		(N·m)	2.23
Rated current		(A(rms))	2.1
Max. current		(A(o-p))	10.4
Regenerative brake frequency (times/min) Note)1	Without option		No limit Note)2
	DV0P4283		No limit Note)2
Rated rotational speed		(r/min)	3000
Max. rotational speed		(r/min)	6500
Moment of inertia of rotor ($\times 10^{-4}$ kg·m^2)	Without brake		0.29
	With brake		0.31
Recommended moment of inertia ratio of the load and the rotor Note)3			30 times or less
Rotary encoder specifications *3			23-bit Absolute
	Resolution per single turn		8388608

• **Brake specifications** (For details, refer to P.167)
(This brake will be released when it is energized. Do not use this for braking the motor in motion.)

Static friction torque (N·m)	1.6 or more
Engaging time (ms)	50 or less
Releasing time (ms) Note)4	20 or less
Exciting current (DC) (A)	0.36
Releasing voltage (DC) (V)	1 or more
Exciting voltage (DC) (V)	24±2.4

• **Permissible load** (For details, refer to P.166)

During assembly	Radial load P-direction (N)	392
	Thrust load A-direction (N)	147
	Thrust load B-direction (N)	196
During operation	Radial load P-direction (N)	245
	Thrust load A, B-direction (N)	98

• For details of Note)1 to Note)4, refer to P.165.
• Dimensions of Driver, refer to P.47.
*1 □□ in the motor part number represents the motor specifications.
*2 Basic type and RS485 communication type are "Position control type".
Detail of model designation, refer to P.18.
*3 When using a rotary encoder as an incremental system (not using multi-turn data), do not connect a battery for absolute encoder.

Torque characteristics (at AC100 V of power voltage <Dotted line represents the torque at 10 % less supply voltage.>)

Without oil seal

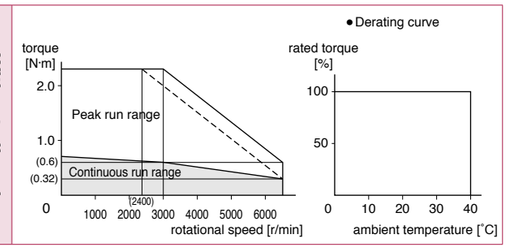

With oil seal

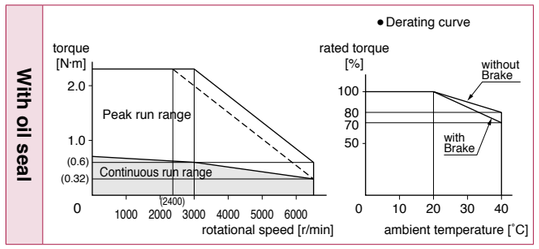

Dimensions

<without brake>

Mass: 0.75 kg (0.78 kg with oil seal)

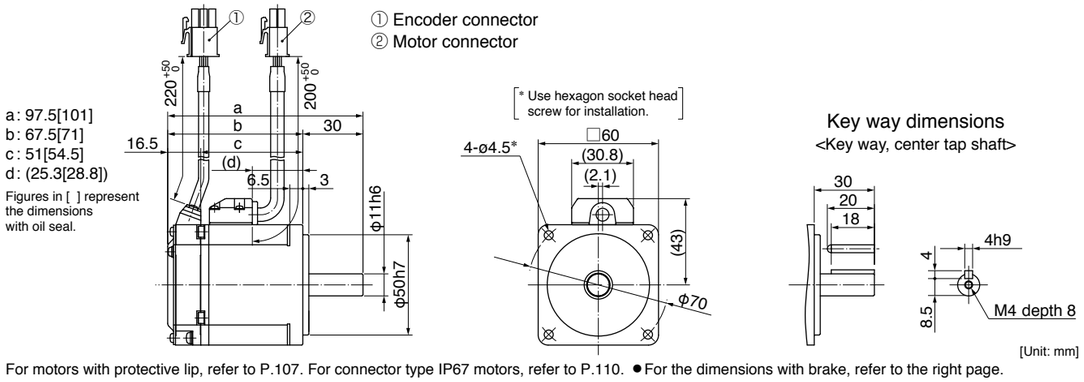

For motors with protective lip, refer to P.107. For connector type IP67 motors, refer to P.110. ● For the dimensions with brake, refer to the right page.

<Cautions> Reduce the moment of inertia ratio if high speed response operation is required.
Dimensions are subject to change without notice. Contact us or a dealer for the latest information.
Read the Instruction Manual carefully and understand all precautions and remarks before using the products.

200 V MHMF 200 W [High inertia 60 mm sq.]

Specifications

			AC200 V
Motor model *1	IP65		MHMF022L1□□
Applicable driver	Model No.	Multifunction type	MADLT15SF
		RS485 communication type *2	MADLN15SG
		Basic type *2	MADLN15SE
	Frame symbol		A-frame
Power supply capacity		(kVA)	0.5
Rated output		(W)	200
Rated torque		(N·m)	0.64
Continuous stall torque		(N·m)	0.76
Momentary Max. peak torque		(N·m)	2.23
Rated current		(A(rms))	1.4
Max. current		(A(o-p))	6.9
Regenerative brake frequency (times/min) Note)1	Without option		No limit Note)2
	DV0P4283		No limit Note)2
Rated rotational speed		(r/min)	3000
Max. rotational speed		(r/min)	6500
Moment of inertia of rotor ($\times 10^{-4}$ kg·m^2)	Without brake		0.29
	With brake		0.31
Recommended moment of inertia ratio of the load and the rotor Note)3			30 times or less
Rotary encoder specifications *3			23-bit Absolute
	Resolution per single turn		8388608

• **Brake specifications** (For details, refer to P.167)
(This brake will be released when it is energized. Do not use this for braking the motor in motion.)

Static friction torque (N·m)	1.6 or more
Engaging time (ms)	50 or less
Releasing time (ms) Note)4	20 or less
Exciting current (DC) (A)	0.36
Releasing voltage (DC) (V)	1 or more
Exciting voltage (DC) (V)	24±2.4

• **Permissible load** (For details, refer to P.166)

During assembly	Radial load P-direction (N)	392
	Thrust load A-direction (N)	147
	Thrust load B-direction (N)	196
During operation	Radial load P-direction (N)	245
	Thrust load A, B-direction (N)	98

• For details of Note)1 to Note)4, refer to P.165.
• Dimensions of Driver, refer to P.47.
*1 □□ in the motor part number represents the motor specifications.
*2 Basic type and RS485 communication type are "Position control type".
Detail of model designation, refer to P.18.
*3 When using a rotary encoder as an incremental system (not using multi-turn data), do not connect a battery for absolute encoder.

Torque characteristics (at AC200 V of power voltage <Dotted line represents the torque at 10 % less supply voltage.>)

Without oil seal

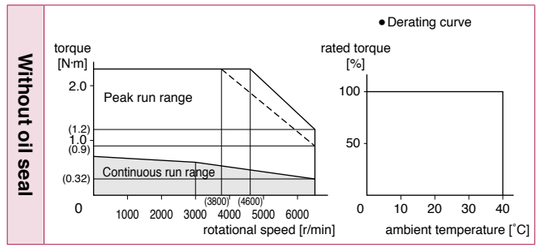

With oil seal

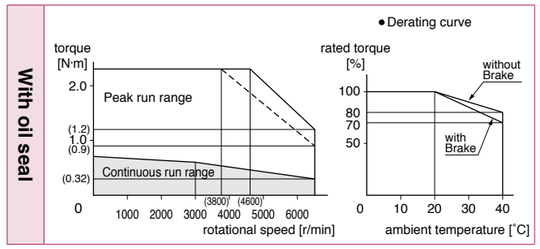

Dimensions

<with brake>

Mass: 1.1 kg (1.2 kg with oil seal)

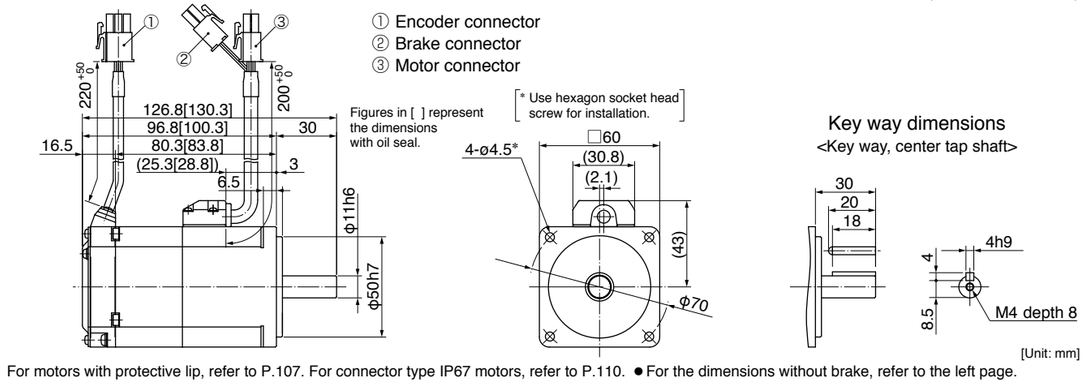

For motors with protective lip, refer to P.107. For connector type IP67 motors, refer to P.110. ● For the dimensions without brake, refer to the left page.

<Cautions> Reduce the moment of inertia ratio if high speed response operation is required.
Dimensions are subject to change without notice. Contact us or a dealer for the latest information.
Read the Instruction Manual carefully and understand all precautions and remarks before using the products.

100 V MHMF 400 W [High inertia 60 mm sq.]

Specifications

			AC100 V
Motor model *1	IP65		MHMF041L1□□
Applicable driver	Model No.	Multifunction type	MCDLT31SF
		RS485 communication type *2	MCDLN31SG
		Basic type *2	MCDLN31SE
	Frame symbol		C-frame
Power supply capacity		(kVA)	0.9
Rated output		(W)	400
Rated torque		(N·m)	1.27
Continuous stall torque		(N·m)	1.40
Momentary Max. peak torque		(N·m)	4.46
Rated current		(A(rms))	4.1
Max. current		(A(o-p))	20.3
Regenerative brake frequency (times/min) Note)1	Without option		No limit Note)2
	DV0P4282		No limit Note)2
Rated rotational speed		(r/min)	3000
Max. rotational speed		(r/min)	6500
Moment of inertia of rotor ($\times 10^{-4}$ kg·m^2)	Without brake		0.56
	With brake		0.58
Recommended moment of inertia ratio of the load and the rotor Note)3			30 times or less
Rotary encoder specifications *3			23-bit Absolute
	Resolution per single turn		8388608

• **Brake specifications** (For details, refer to P.167)
(This brake will be released when it is energized. Do not use this for braking the motor in motion.)

Static friction torque (N·m)	1.6 or more
Engaging time (ms)	50 or less
Releasing time (ms) Note)4	20 or less
Exciting current (DC) (A)	0.36
Releasing voltage (DC) (V)	1 or more
Exciting voltage (DC) (V)	24±2.4

• **Permissible load** (For details, refer to P.166)

During assembly	Radial load P-direction (N)	392
	Thrust load A-direction (N)	147
	Thrust load B-direction (N)	196
During operation	Radial load P-direction (N)	245
	Thrust load A, B-direction (N)	98

• For details of Note)1 to Note)4, refer to P.165.
• Dimensions of Driver, refer to P.48.
*1 □□ in the motor part number represents the motor specifications.
*2 Basic type and RS485 communication type are "Position control type".
Detail of model designation, refer to P.18.
*3 When using a rotary encoder as an incremental system (not using multi-turn data), do not connect a battery for absolute encoder.

Torque characteristics (at AC100 V of power voltage <Dotted line represents the torque at 10 % less supply voltage.>)

Without oil seal

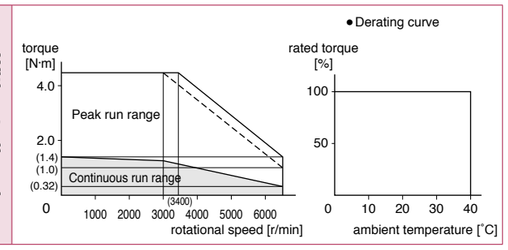

With oil seal

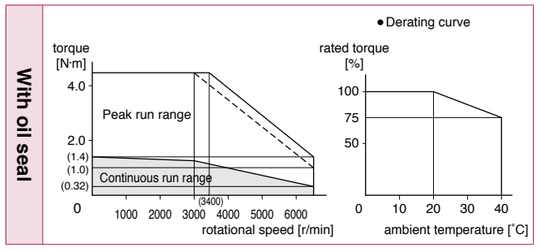

Dimensions

<without brake>

Mass: 1.1 kg (1.2 kg with oil seal)

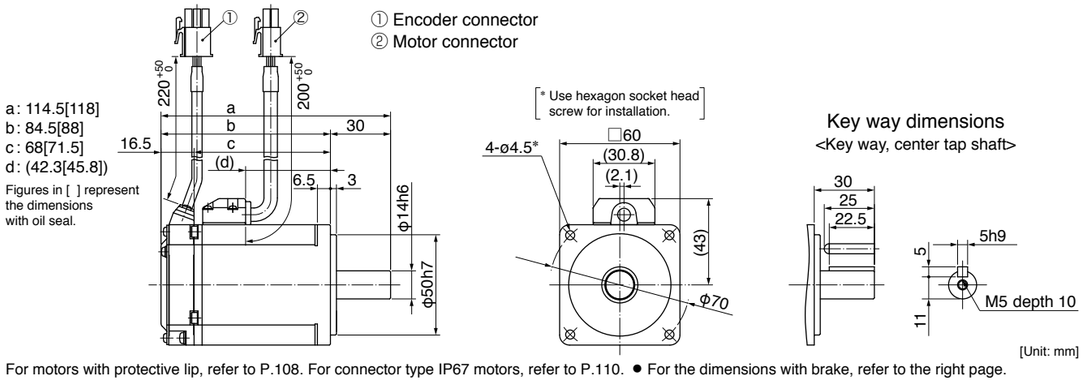

For motors with protective lip, refer to P.108. For connector type IP67 motors, refer to P.110. ● For the dimensions with brake, refer to the right page.

<Cautions> Reduce the moment of inertia ratio if high speed response operation is required.
Dimensions are subject to change without notice. Contact us or a dealer for the latest information.
Read the Instruction Manual carefully and understand all precautions and remarks before using the products.

200 V MHMF 400 W [High inertia 60 mm sq.]

Specifications

			AC200 V
Motor model *1	IP65		MHMF042L1□□
Applicable driver	Model No.	Multifunction type	MBDLT25SF
		RS485 communication type *2	MBDLN25SG
		Basic type *2	MBDLN25SE
	Frame symbol		B-frame
Power supply capacity		(kVA)	0.9
Rated output		(W)	400
Rated torque		(N·m)	1.27
Continuous stall torque		(N·m)	1.40
Momentary Max. peak torque		(N·m)	4.46
Rated current		(A(rms))	2.1
Max. current		(A(o-p))	10.4
Regenerative brake frequency (times/min) Note)1	Without option		No limit Note)2
	DV0P4283		No limit Note)2
Rated rotational speed		(r/min)	3000
Max. rotational speed		(r/min)	6500
Moment of inertia of rotor ($\times 10^{-4}$ kg·m^2)	Without brake		0.56
	With brake		0.58
Recommended moment of inertia ratio of the load and the rotor Note)3			30 times or less
Rotary encoder specifications *3			23-bit Absolute
	Resolution per single turn		8388608

• **Brake specifications** (For details, refer to P.167)
(This brake will be released when it is energized. Do not use this for braking the motor in motion.)

Static friction torque (N·m)	1.6 or more
Engaging time (ms)	50 or less
Releasing time (ms) Note)4	20 or less
Exciting current (DC) (A)	0.36
Releasing voltage (DC) (V)	1 or more
Exciting voltage (DC) (V)	24±2.4

• **Permissible load** (For details, refer to P.166)

During assembly	Radial load P-direction (N)	392
	Thrust load A-direction (N)	147
	Thrust load B-direction (N)	196
During operation	Radial load P-direction (N)	245
	Thrust load A, B-direction (N)	98

• For details of Note)1 to Note)4, refer to P.165.
• Dimensions of Driver, refer to P.47.
*1 □□ in the motor part number represents the motor specifications.
*2 Basic type and RS485 communication type are "Position control type".
Detail of model designation, refer to P.18.
*3 When using a rotary encoder as an incremental system (not using multi-turn data), do not connect a battery for absolute encoder.

Torque characteristics (at AC200 V of power voltage <Dotted line represents the torque at 10 % less supply voltage.>)

Without oil seal

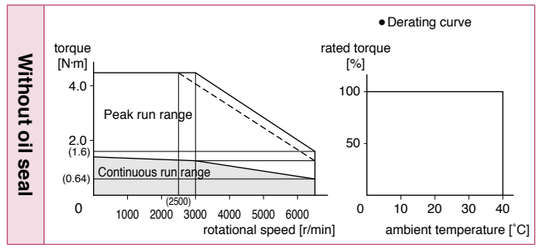

With oil seal

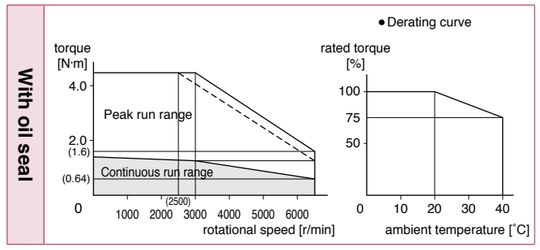

Dimensions

<with brake>

Mass: 1.5 kg (1.6 kg with oil seal)

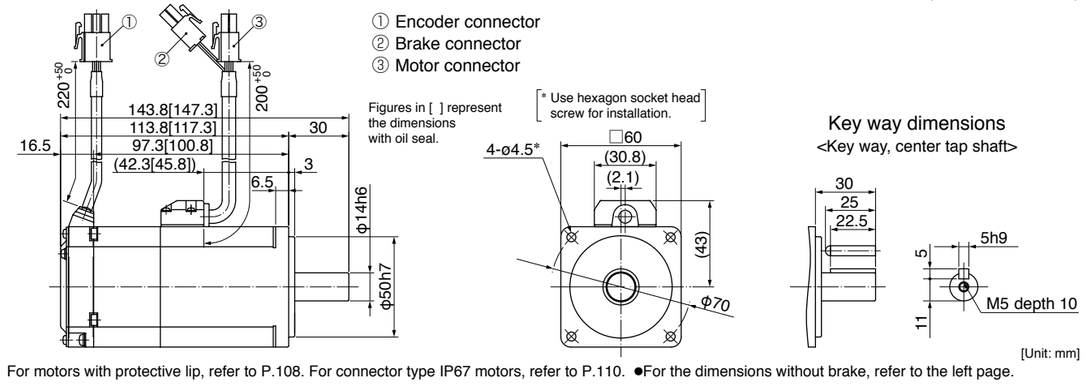

For motors with protective lip, refer to P.108. For connector type IP67 motors, refer to P.110. ●For the dimensions without brake, refer to the left page.

<Cautions> Reduce the moment of inertia ratio if high speed response operation is required.
Dimensions are subject to change without notice. Contact us or a dealer for the latest information.
Read the Instruction Manual carefully and understand all precautions and remarks before using the products.

200 V MHMF 750 W [High inertia 80 mm sq.]

Specifications

			AC200 V
Motor model *1	IP65		MHMF082L1□□
Applicable driver	Model No.	Multifunction type	MCDLT35SF
		RS485 communication type *2	MCDLN35SG
		Basic type *2	MCDLN35SE
	Frame symbol		C-frame
Power supply capacity		(kVA)	1.3
Rated output		(W)	750
Rated torque		(N·m)	2.39
Continuous stall torque		(N·m)	2.86
Momentary Max. peak torque		(N·m)	8.36
Rated current		(A(rms))	3.8
Max. current		(A(o-p))	18.8
Regenerative brake frequency (times/min) Note)1	Without option		No limit Note)2
	DV0P4283		No limit Note)2
Rated rotational speed		(r/min)	3000
Max. rotational speed		(r/min)	6000
Moment of inertia of rotor ($\times 10^{-4}$ kg·m^2)	Without brake		1.56
	With brake		1.66
Recommended moment of inertia ratio of the load and the rotor Note)3			20 times or less
Rotary encoder specifications *3			23-bit Absolute
	Resolution per single turn		8388608

• **Brake specifications** (For details, refer to P.167)
(This brake will be released when it is energized. Do not use this for braking the motor in motion.)

Static friction torque (N·m)	3.8 or more
Engaging time (ms)	70 or less
Releasing time (ms) Note)4	20 or less
Exciting current (DC) (A)	0.42
Releasing voltage (DC) (V)	1 or more
Exciting voltage (DC) (V)	24±2.4

• **Permissible load** (For details, refer to P.166)

During assembly	Radial load P-direction (N)	686
	Thrust load A-direction (N)	294
	Thrust load B-direction (N)	392
During operation	Radial load P-direction (N)	392
	Thrust load A, B-direction (N)	147

• For details of Note)1 to Note)4, refer to P.165.
• Dimensions of Driver, refer to P.48.
*1 □□ in the motor part number represents the motor specifications.
*2 Basic type and RS485 communication type are "Position control type".
Detail of model designation, refer to P.18.
*3 When using a rotary encoder as an incremental system (not using multi-turn data), do not connect a battery for absolute encoder.

Torque characteristics (at AC200 V of power voltage <Dotted line represents the torque at 10 % less supply voltage.>)

Without oil seal

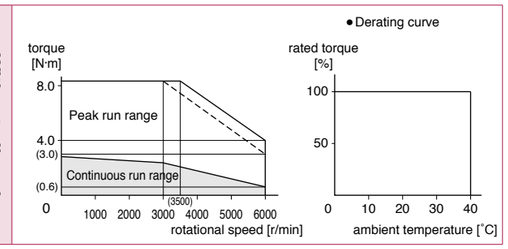

With oil seal

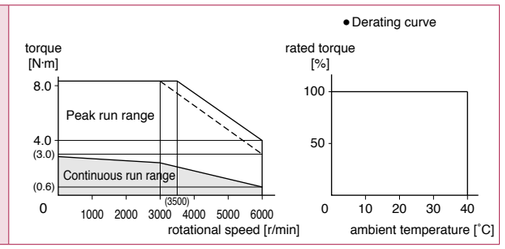

Dimensions

Mass: Without brake: 2.2 kg (2.3 kg with oil seal)
With brake: 2.9 kg (3.0 kg with oil seal)

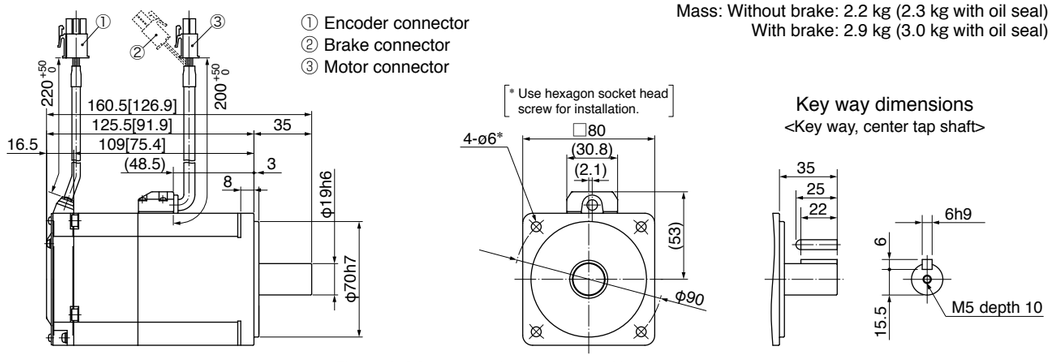

●Figures in [ ] represent the dimensions without brake.
[Unit: mm]

For motors with oil seal, refer to P.106. For motors with protective lip, refer to P.108. For connector type IP67 motors, refer to P.111.

<Cautions> Reduce the moment of inertia ratio if high speed response operation is required.
Dimensions are subject to change without notice. Contact us or a dealer for the latest information.
Read the Instruction Manual carefully and understand all precautions and remarks before using the products.

200 V MHMF 1000 W [High inertia 80 mm sq.]

Specifications

			AC200 V
Motor model *1	IP65		MHMF092L1□□
Applicable driver	Model No.	Multifunction type	MDDLT55SF
		RS485 communication type *2	MDDLN55SG
		Basic type *2	MDDLN55SE
	Frame symbol		D-frame
Power supply capacity		(kVA)	2.3
Rated output		(W)	1000
Rated torque		(N·m)	3.18
Continuous stall torque		(N·m)	3.34
Momentary Max. peak torque		(N·m)	11.1
Rated current		(A(rms))	5.7
Max. current		(A(o-p))	28.2
Regenerative brake frequency (times/min) Note)1	Without option		No limit Note)2
	DV0P4284		No limit Note)2
Rated rotational speed		(r/min)	3000
Max. rotational speed		(r/min)	6000
Moment of inertia of rotor ($\times 10^{-4}$ kg·m^2)	Without brake		2.03
	With brake		2.13
Recommended moment of inertia ratio of the load and the rotor Note)3			20 times or less
Rotary encoder specifications *3			23-bit Absolute
	Resolution per single turn		8388608

• **Brake specifications** (For details, refer to P.167)
(This brake will be released when it is energized. Do not use this for braking the motor in motion.)

Static friction torque (N·m)	3.8 or more
Engaging time (ms)	70 or less
Releasing time (ms) Note)4	20 or less
Exciting current (DC) (A)	0.42
Releasing voltage (DC) (V)	1 or more
Exciting voltage (DC) (V)	24±2.4

• **Permissible load** (For details, refer to P.166)

During assembly	Radial load P-direction (N)	686
	Thrust load A-direction (N)	294
	Thrust load B-direction (N)	392
During operation	Radial load P-direction (N)	392
	Thrust load A, B-direction (N)	147

• For details of Note)1 to Note)4, refer to P.165.
• Dimensions of Driver, refer to P.48.
*1 □□ in the motor part number represents the motor specifications.
*2 Basic type and RS485 communication type are "Position control type".
Detail of model designation, refer to P.18.
*3 When using a rotary encoder as an incremental system (not using multi-turn data), do not connect a battery for absolute encoder.

Torque characteristics (at AC200 V of power voltage <Dotted line represents the torque at 10 % less supply voltage.>)

Without oil seal

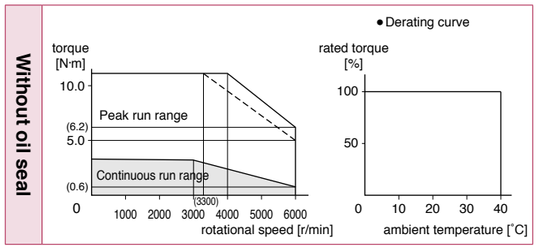

With oil seal

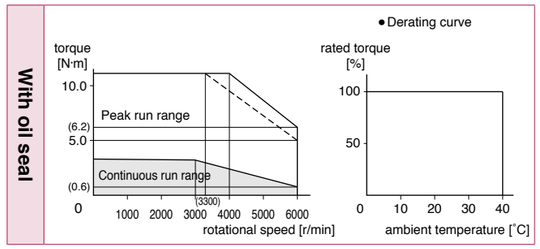

Dimensions

Mass: Without brake: 2.7 kg (2.8 kg with oil seal)
With brake: 3.4 kg (3.5 kg with oil seal)

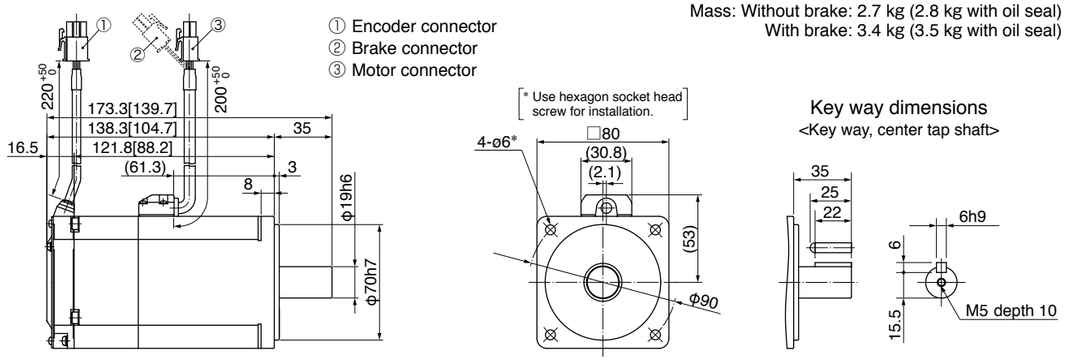

●Figures in [ ] represent the dimensions without brake.
[Unit: mm]

For motors with oil seal, refer to P.106. For motors with protective lip, refer to P.108. For connector type IP67 motors, refer to P.111.

<Cautions> Reduce the moment of inertia ratio if high speed response operation is required.
Dimensions are subject to change without notice. Contact us or a dealer for the latest information.
Read the Instruction Manual carefully and understand all precautions and remarks before using the products.

200 V MHMF 1.0 kW [High inertia 130 mm sq.]

Specifications

			AC200 V
Motor model *1	IP67		MHMF102L1□□
Applicable driver	Model No.	Multifunction type	MDDLT45SF
		RS485 communication type *2	MDDLN45SG
		Basic type *2	MDDLN45SE
	Frame symbol		D-frame
Power supply capacity		(kVA)	1.8
Rated output		(W)	1000
Rated torque		(N·m)	4.77
Continuous stall torque		(N·m)	5.25
Momentary Max. peak torque		(N·m)	14.3
Rated current		(A(rms))	5.2
Max. current		(A(o-p))	22
Regenerative brake frequency (times/min) Note)1	Without option		No limit Note)2
	DV0P4284		No limit Note)2
Rated rotational speed		(r/min)	2000
Max. rotational speed		(r/min)	3000
Moment of inertia of rotor ($\times 10^{-4}$ kg·m^2)	Without brake		22.9
	With brake		24.1
Recommended moment of inertia ratio of the load and the rotor Note)3			5 times or less
Rotary encoder specifications *3			23-bit Absolute
	Resolution per single turn		8388608

• **Brake specifications** (For details, refer to P.167)
(This brake will be released when it is energized. Do not use this for braking the motor in motion.)

Static friction torque (N·m)	13.7 or more
Engaging time (ms)	100 or less
Releasing time (ms) Note)4	50 or less
Exciting current (DC) (A)	0.79±10 %
Releasing voltage (DC) (V)	2 or more
Exciting voltage (DC) (V)	24±2.4

• **Permissible load** (For details, refer to P.166)

During assembly	Radial load P-direction (N)	980
	Thrust load A-direction (N)	588
	Thrust load B-direction (N)	686
During operation	Radial load P-direction (N)	490
	Thrust load A, B-direction (N)	196

• For details of Note)1 to Note)4, refer to P.165.
• Dimensions of Driver, refer to P.48.
*1 □□ in the motor part number represents the motor specifications.
*2 Basic type and RS485 communication type are "Position control type".
Detail of model designation, refer to P.18.
*3 When using a rotary encoder as an incremental system (not using multi-turn data), do not connect a battery for absolute encoder.

Torque characteristics (at AC200 V of power voltage <Dotted line represents the torque at 10 % less supply voltage.>)

With oil seal

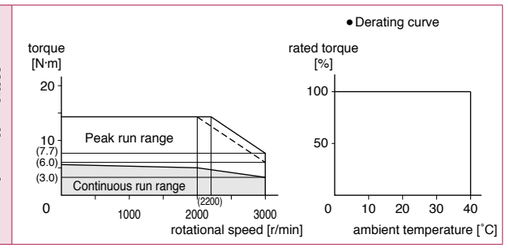

Dimensions

① Encoder connector (Large size JL10)
② Motor/Brake connector

Mass: Without brake: 6.1 kg
With brake: 7.6 kg

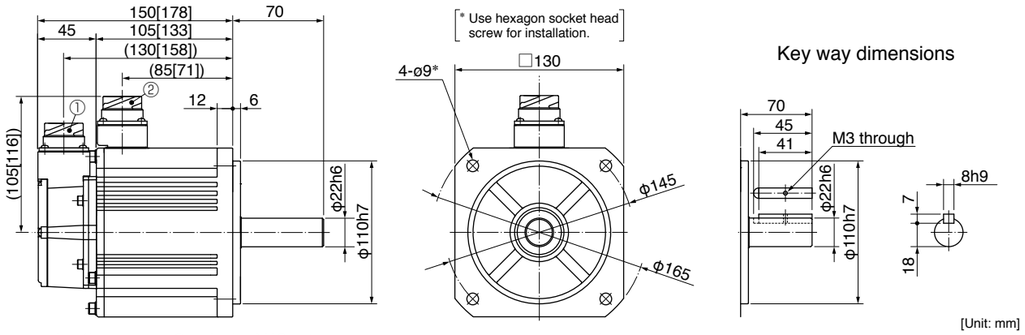

[Unit: mm]

Encoder connector (Small size JN2), refer to P.112. ● Figures in [ ] represent the dimensions with brake.

<Cautions> Reduce the moment of inertia ratio if high speed response operation is required.
Dimensions are subject to change without notice. Contact us or a dealer for the latest information.
Read the Instruction Manual carefully and understand all precautions and remarks before using the products.

200 V MHMF 1.5 kW [High inertia 130 mm sq.]

Specifications

			AC200 V
Motor model *1	IP67		MHMF152L1□□
Applicable driver	Model No.	Multifunction type	MDDLT55SF
		RS485 communication type *2	MDDLN55SG
		Basic type *2	MDDLN55SE
	Frame symbol		D-frame
Power supply capacity		(kVA)	2.3
Rated output		(W)	1500
Rated torque		(N·m)	7.16
Continuous stall torque		(N·m)	7.52
Momentary Max. peak torque		(N·m)	21.5
Rated current		(A(rms))	8.0
Max. current		(A(o-p))	34
Regenerative brake frequency (times/min) Note)1	Without option		No limit Note)2
	DV0P4284		No limit Note)2
Rated rotational speed		(r/min)	2000
Max. rotational speed		(r/min)	3000
Moment of inertia of rotor ($\times 10^{-4}$ kg·m^2)	Without brake		33.4
	With brake		34.6
Recommended moment of inertia ratio of the load and the rotor Note)3			5 times or less
Rotary encoder specifications *3			23-bit Absolute
	Resolution per single turn		8388608

• **Brake specifications** (For details, refer to P.167)
(This brake will be released when it is energized. Do not use this for braking the motor in motion.)

Static friction torque (N·m)	13.7 or more
Engaging time (ms)	100 or less
Releasing time (ms) Note)4	50 or less
Exciting current (DC) (A)	0.79±10 %
Releasing voltage (DC) (V)	2 or more
Exciting voltage (DC) (V)	24±2.4

• **Permissible load** (For details, refer to P.166)

During assembly	Radial load P-direction (N)	980
	Thrust load A-direction (N)	588
	Thrust load B-direction (N)	686
During operation	Radial load P-direction (N)	490
	Thrust load A, B-direction (N)	196

• For details of Note)1 to Note)4, refer to P.165.
• Dimensions of Driver, refer to P.48.
*1 □□ in the motor part number represents the motor specifications.
*2 Basic type and RS485 communication type are "Position control type".
Detail of model designation, refer to P.18.
*3 When using a rotary encoder as an incremental system (not using multi-turn data), do not connect a battery for absolute encoder.

Torque characteristics (at AC200 V of power voltage <Dotted line represents the torque at 10 % less supply voltage.>)

With oil seal

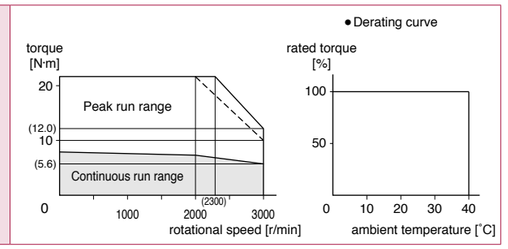

Dimensions

① Encoder connector (Large size JL10)
② Motor/Brake connector

Mass: Without brake: 7.7 kg
With brake: 9.2 kg

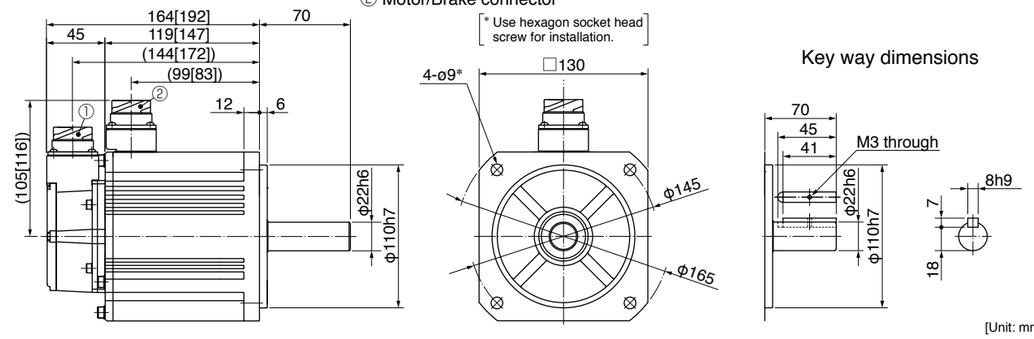

[Unit: mm]

Encoder connector (Small size JN2), refer to P.112. ● Figures in [ ] represent the dimensions with brake.

<Cautions> Reduce the moment of inertia ratio if high speed response operation is required.
Dimensions are subject to change without notice. Contact us or a dealer for the latest information.
Read the Instruction Manual carefully and understand all precautions and remarks before using the products.

200 V MHMF 2.0 kW [High inertia 176 mm sq.]

Specifications

			AC200 V
Motor model *1	IP67		MHMF202L1□□
Applicable driver	Model No.	Multifunction type	MEDLT83SF
		RS485 communication type *2	MEDLN83SG
		Basic type *2	MEDLN83SE
	Frame symbol		E-frame
Power supply capacity		(kVA)	3.8
Rated output		(W)	2000
Rated torque		(N·m)	9.55
Continuous stall torque		(N·m)	11.5
Momentary Max. peak torque		(N·m)	28.6
Rated current		(A(rms))	12.5
Max. current		(A(o-p))	53
Regenerative brake frequency (times/min) Note)1	Without option		No limit Note)2
	DV0P4285		No limit Note)2
Rated rotational speed		(r/min)	2000
Max. rotational speed		(r/min)	3000
Moment of inertia of rotor ($\times 10^{-4}$ kg·m^2)	Without brake		55.7
	With brake		61.0
Recommended moment of inertia ratio of the load and the rotor Note)3			5 times or less
Rotary encoder specifications *3			23-bit Absolute
	Resolution per single turn		8388608

• **Brake specifications** (For details, refer to P.167)
(This brake will be released when it is energized. Do not use this for braking the motor in motion.)

Static friction torque (N·m)	25.0 or more
Engaging time (ms)	80 or less
Releasing time (ms) Note)4	25 or less
Exciting current (DC) (A)	1.29±10 %
Releasing voltage (DC) (V)	2 or more
Exciting voltage (DC) (V)	24±2.4

• **Permissible load** (For details, refer to P.166)

During assembly	Radial load P-direction (N)	1666
	Thrust load A-direction (N)	784
	Thrust load B-direction (N)	980
During operation	Radial load P-direction (N)	784
	Thrust load A, B-direction (N)	343

• For details of Note)1 to Note)4, refer to P.165.
• Dimensions of Driver, refer to P.49.
*1 □□ in the motor part number represents the motor specifications.
*2 Basic type and RS485 communication type are "Position control type".
Detail of model designation, refer to P.18.
*3 When using a rotary encoder as an incremental system (not using multi-turn data), do not connect a battery for absolute encoder.

Torque characteristics (at AC200 V of power voltage <Dotted line represents the torque at 10 % less supply voltage.>)

With oil seal

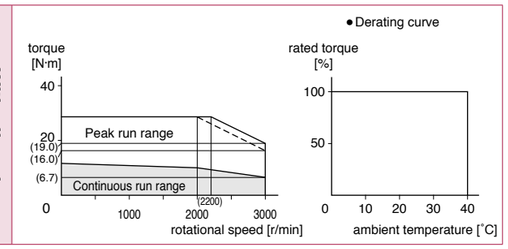

Dimensions

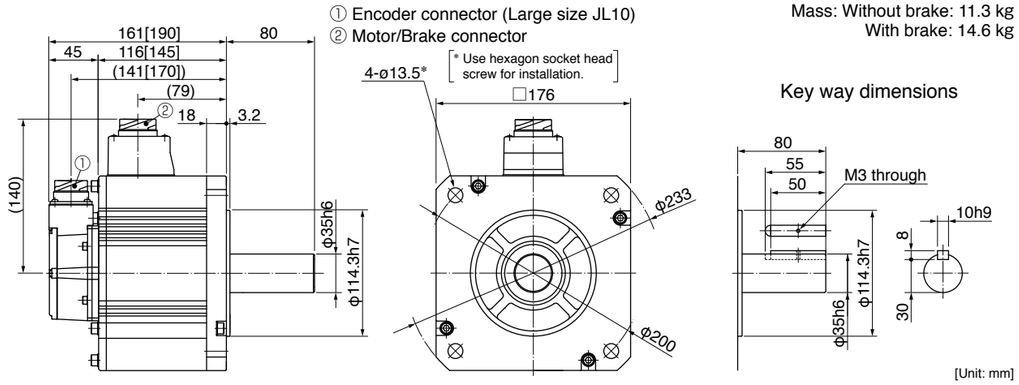

Encoder connector (Small size JN2), refer to P.112. ● Figures in [ ] represent the dimensions with brake.

<Cautions> Reduce the moment of inertia ratio if high speed response operation is required.
Dimensions are subject to change without notice. Contact us or a dealer for the latest information.
Read the Instruction Manual carefully and understand all precautions and remarks before using the products.

200 V MHMF 3.0 kW [High inertia 176 mm sq.]

Specifications

			AC200 V
Motor model *1	IP67		MHMF302L1□□
Applicable driver	Model No.	Multifunction type	MFDLTA3SF
		RS485 communication type *2	MFDLNA3SG
		Basic type *2	MFDLNA3SE
	Frame symbol		F-frame
Power supply capacity		(kVA)	4.5
Rated output		(W)	3000
Rated torque		(N·m)	14.3
Continuous stall torque		(N·m)	17.2
Momentary Max. peak torque		(N·m)	43.0
Rated current		(A(rms))	17.0
Max. current		(A(o-p))	72
Regenerative brake frequency (times/min) Note)1	Without option		No limit Note)2
	DV0P4285×2		No limit Note)2
Rated rotational speed		(r/min)	2000
Max. rotational speed		(r/min)	3000
Moment of inertia of rotor ($\times 10^{-4}$ kg·m^2)	Without brake		85.3
	With brake		90.7
Recommended moment of inertia ratio of the load and the rotor Note)3			5 times or less
Rotary encoder specifications *3			23-bit Absolute
	Resolution per single turn		8388608

• **Brake specifications** (For details, refer to P.167)
(This brake will be released when it is energized. Do not use this for braking the motor in motion.)

Static friction torque (N·m)	25.0 or more
Engaging time (ms)	80 or less
Releasing time (ms) Note)4	25 or less
Exciting current (DC) (A)	1.29±10 %
Releasing voltage (DC) (V)	2 or more
Exciting voltage (DC) (V)	24±2.4

• **Permissible load** (For details, refer to P.166)

During assembly	Radial load P-direction (N)	1666
	Thrust load A-direction (N)	784
	Thrust load B-direction (N)	980
During operation	Radial load P-direction (N)	784
	Thrust load A, B-direction (N)	343

• For details of Note)1 to Note)4, refer to P.165.
• Dimensions of Driver, refer to P.49.
*1 □□ in the motor part number represents the motor specifications.
*2 Basic type and RS485 communication type are "Position control type".
Detail of model designation, refer to P.18.
*3 When using a rotary encoder as an incremental system (not using multi-turn data), do not connect a battery for absolute encoder.

Torque characteristics (at AC200 V of power voltage <Dotted line represents the torque at 10 % less supply voltage.>)

With oil seal

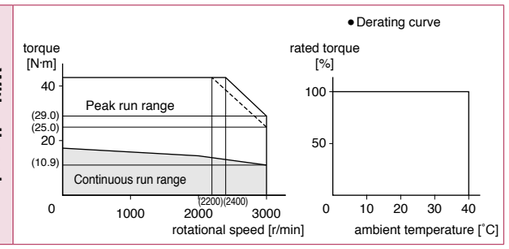

Dimensions

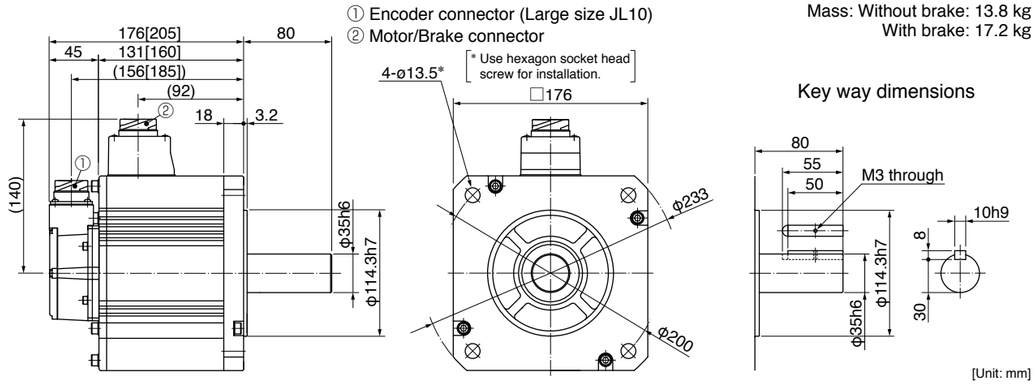

Encoder connector (Small size JN2), refer to P.112. ● Figures in [ ] represent the dimensions with brake.

<Cautions> Reduce the moment of inertia ratio if high speed response operation is required.
Dimensions are subject to change without notice. Contact us or a dealer for the latest information.
Read the Instruction Manual carefully and understand all precautions and remarks before using the products.

200 V MHMF 4.0 kW [High inertia 176 mm sq.]

Specifications

			AC200 V
Motor model *1	IP67		MHMF402L1□□
Applicable driver	Model No.	Multifunction type	MFDLTB3SF
		RS485 communication type *2	MFDLNB3SG
		Basic type *2	MFDLNB3SE
	Frame symbol		F-frame
Power supply capacity		(kVA)	7.5
Rated output		(W)	4000
Rated torque		(N·m)	19.1
Continuous stall torque		(N·m)	22.0
Momentary Max. peak torque		(N·m)	57.3
Rated current		(A(rms))	20
Max. current		(A(o-p))	85
Regenerative brake frequency (times/min) Note)1	Without option		No limit Note)2
	DV0P4285×2		No limit Note)2
Rated rotational speed		(r/min)	2000
Max. rotational speed		(r/min)	3000
Moment of inertia of rotor ($\times 10^{-4}$ kg·m^2)	Without brake		104
	With brake		110
Recommended moment of inertia ratio of the load and the rotor Note)3			5 times or less
Rotary encoder specifications *3			23-bit Absolute
	Resolution per single turn		8388608

• **Brake specifications** (For details, refer to P.167)
(This brake will be released when it is energized. Do not use this for braking the motor in motion.)

Static friction torque (N·m)	25.0 or more
Engaging time (ms)	80 or less
Releasing time (ms) Note)4	25 or less
Exciting current (DC) (A)	1.29±10 %
Releasing voltage (DC) (V)	2 or more
Exciting voltage (DC) (V)	24±2.4

• **Permissible load** (For details, refer to P.166)

During assembly	Radial load P-direction (N)	1666
	Thrust load A-direction (N)	784
	Thrust load B-direction (N)	980
During operation	Radial load P-direction (N)	784
	Thrust load A, B-direction (N)	343

• For details of Note)1 to Note)4, refer to P.165.
• Dimensions of Driver, refer to P.49.
*1 □□ in the motor part number represents the motor specifications.
*2 Basic type and RS485 communication type are "Position control type".
Detail of model designation, refer to P.18.
*3 When using a rotary encoder as an incremental system (not using multi-turn data), do not connect a battery for absolute encoder.

Torque characteristics (at AC200 V of power voltage <Dotted line represents the torque at 10 % less supply voltage.>)

With oil seal

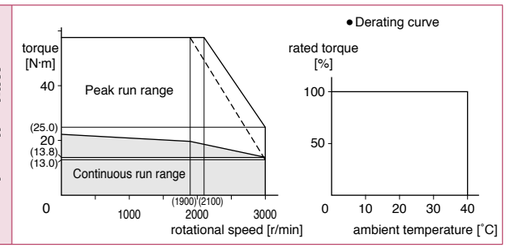

Dimensions

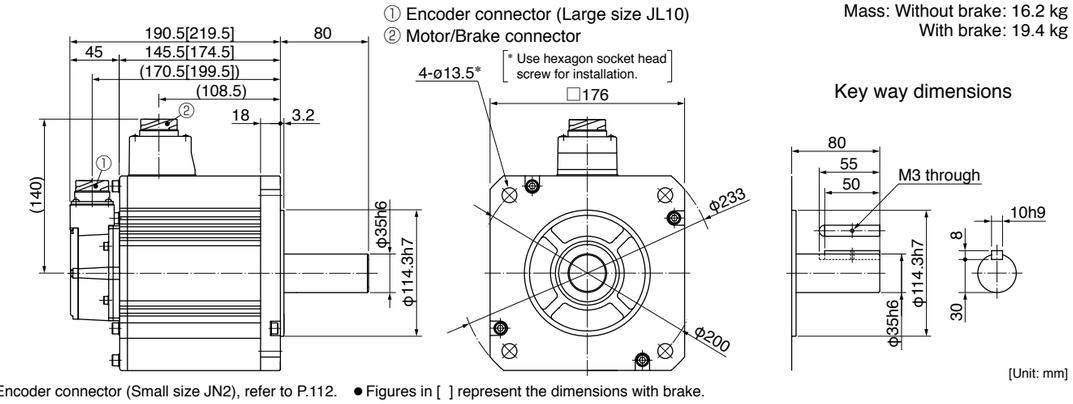

Encoder connector (Small size JN2), refer to P.112. ● Figures in [ ] represent the dimensions with brake.

<Cautions> Reduce the moment of inertia ratio if high speed response operation is required.
Dimensions are subject to change without notice. Contact us or a dealer for the latest information.
Read the Instruction Manual carefully and understand all precautions and remarks before using the products.

200 V MHMF 5.0 kW [High inertia 176 mm sq.]

Specifications

			AC200 V
Motor model *1	IP67		MHMF502L1□□
Applicable driver	Model No.	Multifunction type	MFDLTB3SF
		RS485 communication type *2	MFDLNB3SG
		Basic type *2	MFDLNB3SE
	Frame symbol		F-frame
Power supply capacity		(kVA)	7.5
Rated output		(W)	5000
Rated torque		(N·m)	23.9
Continuous stall torque		(N·m)	26.3
Momentary Max. peak torque		(N·m)	71.6
Rated current		(A(rms))	23.3
Max. current		(A(o-p))	99
Regenerative brake frequency (times/min) Note)1	Without option		No limit Note)2
	DV0P4285×2		No limit Note)2
Rated rotational speed		(r/min)	2000
Max. rotational speed		(r/min)	3000
Moment of inertia of rotor ($\times 10^{-4}$ kg·m^2)	Without brake		146
	With brake		151
Recommended moment of inertia ratio of the load and the rotor Note)3			5 times or less
Rotary encoder specifications *3			23-bit Absolute
	Resolution per single turn		8388608

• **Brake specifications** (For details, refer to P.167)
(This brake will be released when it is energized. Do not use this for braking the motor in motion.)

Static friction torque (N·m)	44.1 or more
Engaging time (ms)	150 or less
Releasing time (ms) Note)4	30 or less
Exciting current (DC) (A)	1.29±10 %
Releasing voltage (DC) (V)	2 or more
Exciting voltage (DC) (V)	24±2.4

• **Permissible load** (For details, refer to P.166)

During assembly	Radial load P-direction (N)	1666
	Thrust load A-direction (N)	784
	Thrust load B-direction (N)	980
During operation	Radial load P-direction (N)	784
	Thrust load A, B-direction (N)	343

• For details of Note)1 to Note)4, refer to P.165.
• Dimensions of Driver, refer to P.49.
*1 □□ in the motor part number represents the motor specifications.
*2 Basic type and RS485 communication type are "Position control type".
Detail of model designation, refer to P.18.
*3 When using a rotary encoder as an incremental system (not using multi-turn data), do not connect a battery for absolute encoder.

Torque characteristics (at AC200 V of power voltage <Dotted line represents the torque at 10 % less supply voltage.>)

With oil seal

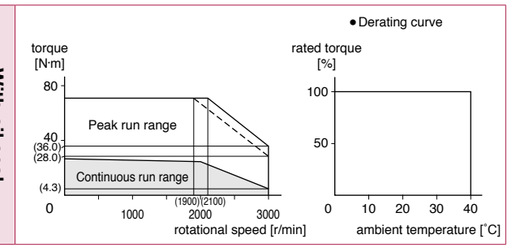

Dimensions

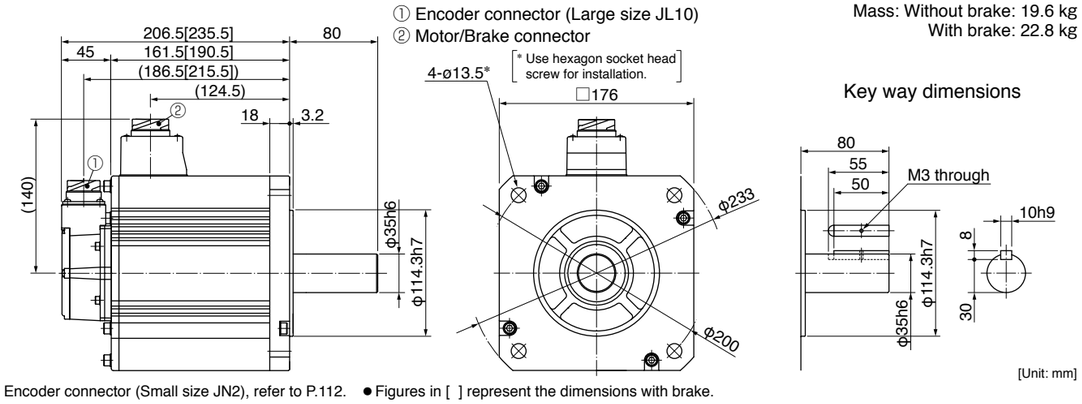

Encoder connector (Small size JN2), refer to P.112. ● Figures in [ ] represent the dimensions with brake.

<Cautions> Reduce the moment of inertia ratio if high speed response operation is required.
Dimensions are subject to change without notice. Contact us or a dealer for the latest information.
Read the Instruction Manual carefully and understand all precautions and remarks before using the products.

200 V MDMF 1.0 kW [Middle inertia 130 mm sq.]

Specifications

			AC200 V
Motor model *1	IP67		MDMF102L1□□
Applicable driver	Model No.	Multifunction type	MDDLT45SF
		RS485 communication type *2	MDDLN45SG
		Basic type *2	MDDLN45SE
	Frame symbol		D-frame
Power supply capacity		(kVA)	1.8
Rated output		(W)	1000
Rated torque		(N·m)	4.77
Continuous stall torque		(N·m)	5.25
Momentary Max. peak torque		(N·m)	14.3
Rated current		(A(rms))	5.2
Max. current		(A(o-p))	22
Regenerative brake frequency (times/min) Note)1	Without option		No limit Note)2
	DV0P4284		No limit Note)2
Rated rotational speed		(r/min)	2000
Max. rotational speed		(r/min)	3000
Moment of inertia of rotor ($\times 10^{-4}$ kg·m^2)	Without brake		6.18
	With brake		7.40
Recommended moment of inertia ratio of the load and the rotor Note)3			10 times or less
Rotary encoder specifications *3			23-bit Absolute
	Resolution per single turn		8388608

• **Brake specifications** (For details, refer to P.167)
(This brake will be released when it is energized. Do not use this for braking the motor in motion.)

Static friction torque (N·m)	13.7 or more
Engaging time (ms)	100 or less
Releasing time (ms) Note)4	50 or less
Exciting current (DC) (A)	0.79±10 %
Releasing voltage (DC) (V)	2 or more
Exciting voltage (DC) (V)	24±2.4

• **Permissible load** (For details, refer to P.166)

During assembly	Radial load P-direction (N)	980
	Thrust load A-direction (N)	588
	Thrust load B-direction (N)	686
During operation	Radial load P-direction (N)	490
	Thrust load A, B-direction (N)	196

• For details of Note)1 to Note)4, refer to P.165.
• Dimensions of Driver, refer to P.48.
*1 □□ in the motor part number represents the motor specifications.
*2 Basic type and RS485 communication type are "Position control type".
Detail of model designation, refer to P.18.
*3 When using a rotary encoder as an incremental system (not using multi-turn data), do not connect a battery for absolute encoder.

Torque characteristics (at AC200 V of power voltage <Dotted line represents the torque at 10 % less supply voltage.>)

With oil seal

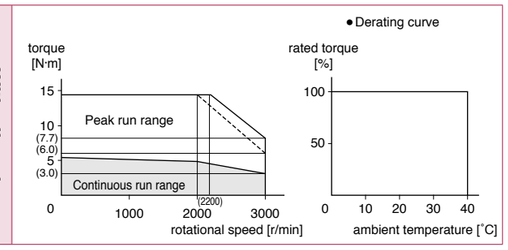

Dimensions

Mass: Without brake: 4.6 kg
With brake: 6.1 kg

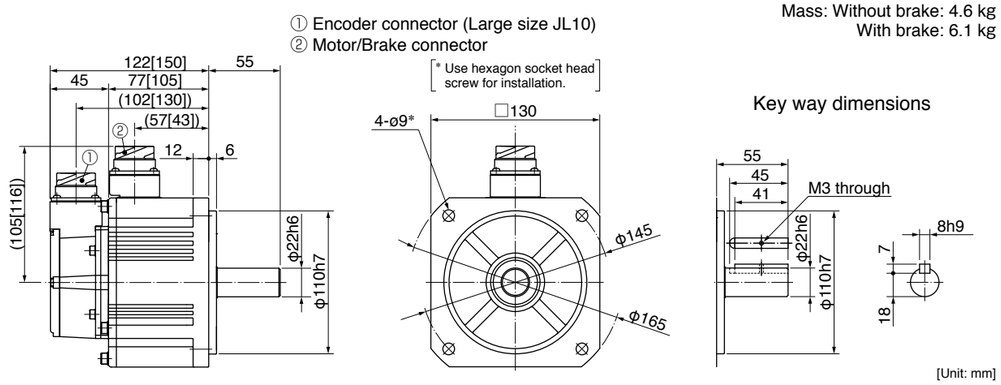

Encoder connector (Small size JN2), refer to P.113. ● Figures in [ ] represent the dimensions with brake.

<Cautions> Reduce the moment of inertia ratio if high speed response operation is required.
Dimensions are subject to change without notice. Contact us or a dealer for the latest information.
Read the Instruction Manual carefully and understand all precautions and remarks before using the products.

200 V MDMF 1.5 kW [Middle inertia 130 mm sq.]

Specifications

			AC200 V
Motor model *1	IP67		MDMF152L1□□
Applicable driver	Model No.	Multifunction type	MDDLT55SF
		RS485 communication type *2	MDDLN55SG
		Basic type *2	MDDLN55SE
	Frame symbol		D-frame
Power supply capacity		(kVA)	2.3
Rated output		(W)	1500
Rated torque		(N·m)	7.16
Continuous stall torque		(N·m)	7.52
Momentary Max. peak torque		(N·m)	21.5
Rated current		(A(rms))	8.0
Max. current		(A(o-p))	34
Regenerative brake frequency (times/min) Note)1	Without option		No limit Note)2
	DV0P4284		No limit Note)2
Rated rotational speed		(r/min)	2000
Max. rotational speed		(r/min)	3000
Moment of inertia of rotor ($\times 10^{-4}$ kg·m^2)	Without brake		9.16
	With brake		10.4
Recommended moment of inertia ratio of the load and the rotor Note)3			10 times or less
Rotary encoder specifications *3			23-bit Absolute
	Resolution per single turn		8388608

• **Brake specifications** (For details, refer to P.167)
(This brake will be released when it is energized. Do not use this for braking the motor in motion.)

Static friction torque (N·m)	13.7 or more
Engaging time (ms)	100 or less
Releasing time (ms) Note)4	50 or less
Exciting current (DC) (A)	0.79±10 %
Releasing voltage (DC) (V)	2 or more
Exciting voltage (DC) (V)	24±2.4

• **Permissible load** (For details, refer to P.166)

During assembly	Radial load P-direction (N)	980
	Thrust load A-direction (N)	588
	Thrust load B-direction (N)	686
During operation	Radial load P-direction (N)	490
	Thrust load A, B-direction (N)	196

• For details of Note)1 to Note)4, refer to P.165.
• Dimensions of Driver, refer to P.48.
*1 □□ in the motor part number represents the motor specifications.
*2 Basic type and RS485 communication type are "Position control type".
Detail of model designation, refer to P.18.
*3 When using a rotary encoder as an incremental system (not using multi-turn data), do not connect a battery for absolute encoder.

Torque characteristics (at AC200 V of power voltage <Dotted line represents the torque at 10 % less supply voltage.>)

With oil seal

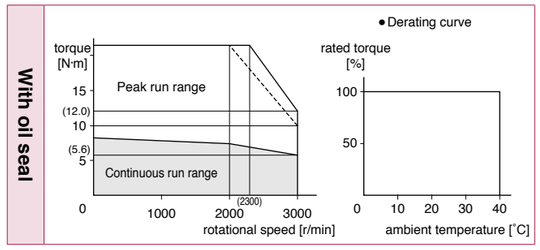

Dimensions

Mass: Without brake: 5.7 kg
With brake: 7.2 kg

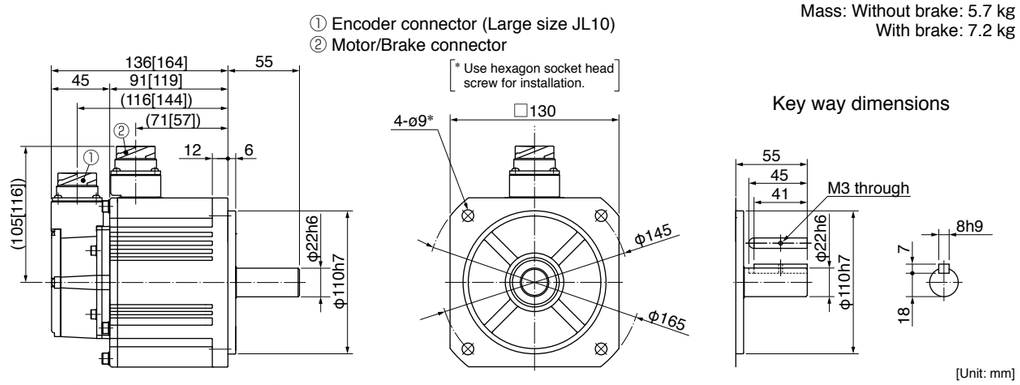

Encoder connector (Small size JN2), refer to P.113. ● Figures in [ ] represent the dimensions with brake.

<Cautions> Reduce the moment of inertia ratio if high speed response operation is required.
Dimensions are subject to change without notice. Contact us or a dealer for the latest information.
Read the Instruction Manual carefully and understand all precautions and remarks before using the products.

200 V MDMF 2.0 kW [Middle inertia 130 mm sq.]

Specifications

			AC200 V
Motor model *1	IP67		MDMF202L1□□
Applicable driver	Model No.	Multifunction type	MEDLT83SF
		RS485 communication type *2	MEDLN83SG
		Basic type *2	MEDLN83SE
	Frame symbol		E-frame
Power supply capacity		(kVA)	3.8
Rated output		(W)	2000
Rated torque		(N·m)	9.55
Continuous stall torque		(N·m)	10.0
Momentary Max. peak torque		(N·m)	28.6
Rated current		(A(rms))	9.9
Max. current		(A(o-p))	42
Regenerative brake frequency (times/min) Note)1	Without option		No limit Note)2
	DV0P4285		No limit Note)2
Rated rotational speed		(r/min)	2000
Max. rotational speed		(r/min)	3000
Moment of inertia of rotor ($\times 10^{-4}$ kg·m^2)	Without brake		12.1
	With brake		13.3
Recommended moment of inertia ratio of the load and the rotor Note)3			10 times or less
Rotary encoder specifications *3			23-bit Absolute
	Resolution per single turn		8388608

• **Brake specifications** (For details, refer to P.167)
(This brake will be released when it is energized. Do not use this for braking the motor in motion.)

Static friction torque (N·m)	13.7 or more
Engaging time (ms)	100 or less
Releasing time (ms) Note)4	50 or less
Exciting current (DC) (A)	0.79±10 %
Releasing voltage (DC) (V)	2 or more
Exciting voltage (DC) (V)	24±2.4

• **Permissible load** (For details, refer to P.166)

During assembly	Radial load P-direction (N)	980
	Thrust load A-direction (N)	588
	Thrust load B-direction (N)	686
During operation	Radial load P-direction (N)	490
	Thrust load A, B-direction (N)	196

• For details of Note)1 to Note)4, refer to P.165.
• Dimensions of Driver, refer to P.49.
*1 □□ in the motor part number represents the motor specifications.
*2 Basic type and RS485 communication type are "Position control type".
Detail of model designation, refer to P.18.
*3 When using a rotary encoder as an incremental system (not using multi-turn data), do not connect a battery for absolute encoder.

Torque characteristics (at AC200 V of power voltage <Dotted line represents the torque at 10 % less supply voltage.>)

With oil seal

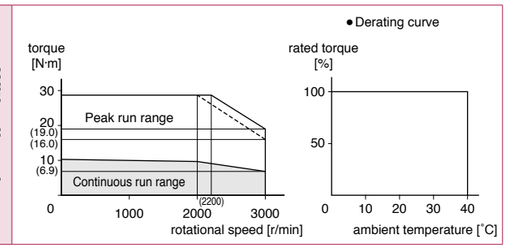

Dimensions

Mass: Without brake: 6.9 kg
With brake: 8.4 kg

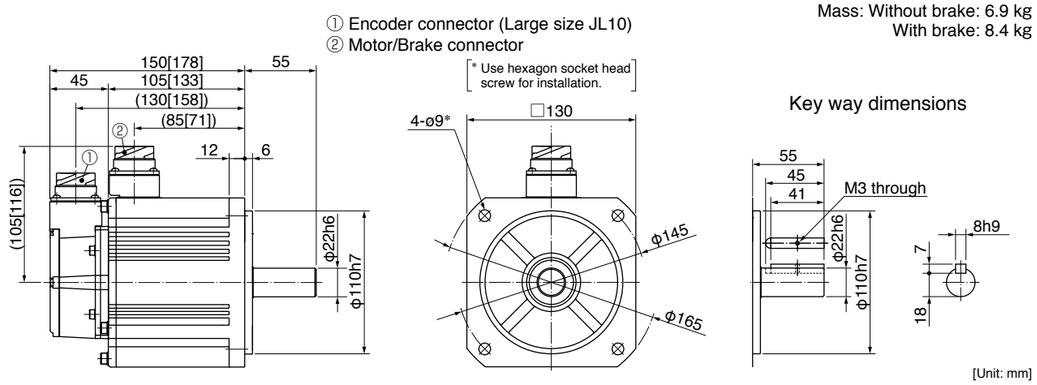

Encoder connector (Small size JN2), refer to P.113. ● Figures in [ ] represent the dimensions with brake.

<Cautions> Reduce the moment of inertia ratio if high speed response operation is required.
Dimensions are subject to change without notice. Contact us or a dealer for the latest information.
Read the Instruction Manual carefully and understand all precautions and remarks before using the products.

200 V MDMF 3.0 kW [Middle inertia 130 mm sq.]

Specifications

			AC200 V
Motor model *1	IP67		MDMF302L1□□
Applicable driver	Model No.	Multifunction type	MFDLTA3SF
		RS485 communication type *2	MFDLNA3SG
		Basic type *2	MFDLNA3SE
	Frame symbol		F-frame
Power supply capacity		(kVA)	4.5
Rated output		(W)	3000
Rated torque		(N·m)	14.3
Continuous stall torque		(N·m)	15.0
Momentary Max. peak torque		(N·m)	43.0
Rated current		(A(rms))	16.4
Max. current		(A(o-p))	70
Regenerative brake frequency (times/min) Note)1	Without option		No limit Note)2
	DV0P4285×2		No limit Note)2
Rated rotational speed		(r/min)	2000
Max. rotational speed		(r/min)	3000
Moment of inertia of rotor ($\times 10^{-4}$ kg·m^2)	Without brake		18.6
	With brake		19.6
Recommended moment of inertia ratio of the load and the rotor Note)3			10 times or less
Rotary encoder specifications *3			23-bit Absolute
	Resolution per single turn		8388608

• **Brake specifications** (For details, refer to P.167)
(This brake will be released when it is energized. Do not use this for braking the motor in motion.)

Static friction torque (N·m)	22.0 or more
Engaging time (ms)	110 or less
Releasing time (ms) Note)4	50 or less
Exciting current (DC) (A)	0.90±10 %
Releasing voltage (DC) (V)	2 or more
Exciting voltage (DC) (V)	24±2.4

• **Permissible load** (For details, refer to P.166)

During assembly	Radial load P-direction (N)	980
	Thrust load A-direction (N)	588
	Thrust load B-direction (N)	686
During operation	Radial load P-direction (N)	784
	Thrust load A, B-direction (N)	343

• For details of Note)1 to Note)4, refer to P.165.
• Dimensions of Driver, refer to P.49.
*1 □□ in the motor part number represents the motor specifications.
*2 Basic type and RS485 communication type are "Position control type".
Detail of model designation, refer to P.18.
*3 When using a rotary encoder as an incremental system (not using multi-turn data), do not connect a battery for absolute encoder.

Torque characteristics (at AC200 V of power voltage <Dotted line represents the torque at 10 % less supply voltage.>)

With oil seal

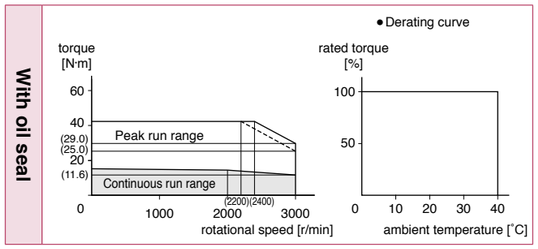

Dimensions

Mass: Without brake: 9.3 kg
With brake: 10.9 kg

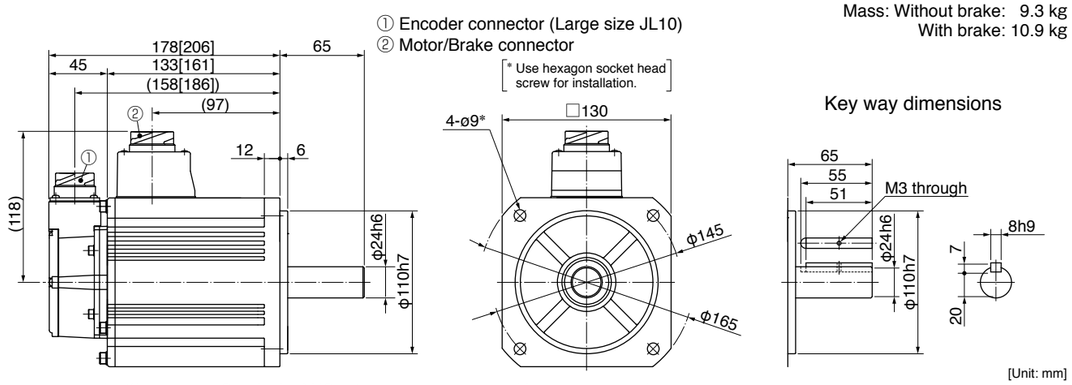

Encoder connector (Small size JN2), refer to P.113. ● Figures in [ ] represent the dimensions with brake.

<Cautions> Reduce the moment of inertia ratio if high speed response operation is required.
Dimensions are subject to change without notice. Contact us or a dealer for the latest information.
Read the Instruction Manual carefully and understand all precautions and remarks before using the products.

200 V MDMF 4.0 kW [Middle inertia 176 mm sq.]

Specifications

			AC200 V
Motor model *1	IP67		MDMF402L1□□
Applicable driver	Model No.	Multifunction type	MFDLTB3SF
		RS485 communication type *2	MFDLNB3SG
		Basic type *2	MFDLNB3SE
	Frame symbol		F-frame
Power supply capacity		(kVA)	7.5
Rated output		(W)	4000
Rated torque		(N·m)	19.1
Continuous stall torque		(N·m)	22.0
Momentary Max. peak torque		(N·m)	57.3
Rated current		(A(rms))	20.0
Max. current		(A(o-p))	85
Regenerative brake frequency (times/min) Note)1	Without option		No limit Note)2
	DV0P4285×2		No limit Note)2
Rated rotational speed		(r/min)	2000
Max. rotational speed		(r/min)	3000
Moment of inertia of rotor ($\times 10^{-4}$ kg·m^2)	Without brake		46.9
	With brake		52.3
Recommended moment of inertia ratio of the load and the rotor Note)3			10 times or less
Rotary encoder specifications *3			23-bit Absolute
	Resolution per single turn		8388608

• **Brake specifications** (For details, refer to P.167)
(This brake will be released when it is energized. Do not use this for braking the motor in motion.)

Static friction torque (N·m)	25.0 or more
Engaging time (ms)	80 or less
Releasing time (ms) Note)4	25 or less
Exciting current (DC) (A)	1.29±10 %
Releasing voltage (DC) (V)	2 or more
Exciting voltage (DC) (V)	24±2.4

• **Permissible load** (For details, refer to P.166)

During assembly	Radial load P-direction (N)	1666
	Thrust load A-direction (N)	784
	Thrust load B-direction (N)	980
During operation	Radial load P-direction (N)	784
	Thrust load A, B-direction (N)	343

• For details of Note)1 to Note)4, refer to P.165.
• Dimensions of Driver, refer to P.49.
*1 □□ in the motor part number represents the motor specifications.
*2 Basic type and RS485 communication type are "Position control type".
Detail of model designation, refer to P.18.
*3 When using a rotary encoder as an incremental system (not using multi-turn data), do not connect a battery for absolute encoder.

Torque characteristics (at AC200 V of power voltage <Dotted line represents the torque at 10 % less supply voltage.>)

With oil seal

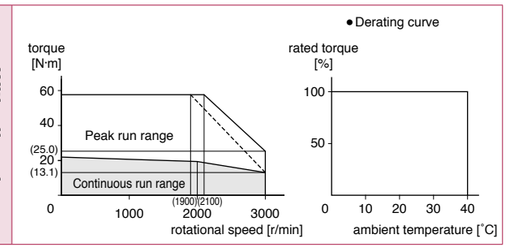

Dimensions

① Encoder connector (Large size JL10)
② Motor/Brake connector

Mass: Without brake: 13.4 kg
With brake: 16.8 kg

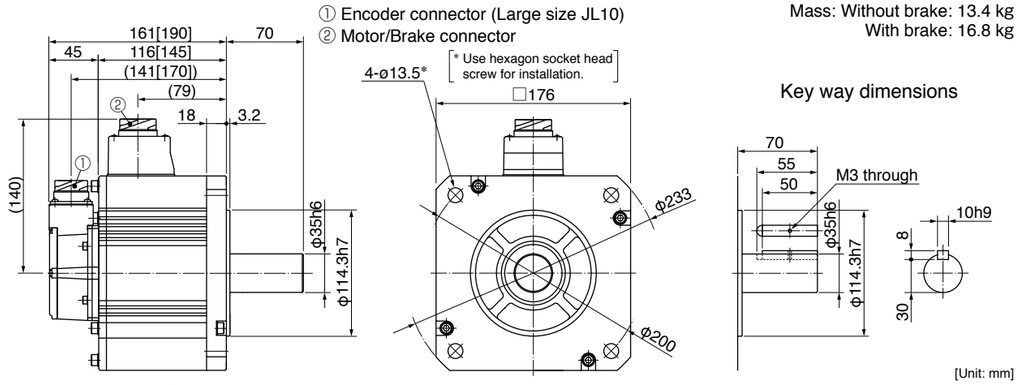

Encoder connector (Small size JN2), refer to P.113. ● Figures in [ ] represent the dimensions with brake.

<Cautions> Reduce the moment of inertia ratio if high speed response operation is required.
Dimensions are subject to change without notice. Contact us or a dealer for the latest information.
Read the Instruction Manual carefully and understand all precautions and remarks before using the products.

200 V MDMF 5.0 kW [Middle inertia 176 mm sq.]

Specifications

			AC200 V
Motor model *1	IP67		MDMF502L1□□
Applicable driver	Model No.	Multifunction type	MFDLTB3SF
		RS485 communication type *2	MFDLNB3SG
		Basic type *2	MFDLNB3SE
	Frame symbol		F-frame
Power supply capacity		(kVA)	7.5
Rated output		(W)	5000
Rated torque		(N·m)	23.9
Continuous stall torque		(N·m)	26.3
Momentary Max. peak torque		(N·m)	71.6
Rated current		(A(rms))	23.3
Max. current		(A(o-p))	99
Regenerative brake frequency (times/min) Note)1	Without option		No limit Note)2
	DV0P4285×2		No limit Note)2
Rated rotational speed		(r/min)	2000
Max. rotational speed		(r/min)	3000
Moment of inertia of rotor ($\times 10^{-4}$ kg·m^2)	Without brake		58.2
	With brake		63.0
Recommended moment of inertia ratio of the load and the rotor Note)3			10 times or less
Rotary encoder specifications *3			23-bit Absolute
	Resolution per single turn		8388608

• **Brake specifications** (For details, refer to P.167)
(This brake will be released when it is energized. Do not use this for braking the motor in motion.)

Static friction torque (N·m)	44.1 or more
Engaging time (ms)	150 or less
Releasing time (ms) Note)4	30 or less
Exciting current (DC) (A)	1.29±10 %
Releasing voltage (DC) (V)	2 or more
Exciting voltage (DC) (V)	24±2.4

• **Permissible load** (For details, refer to P.166)

During assembly	Radial load P-direction (N)	1666
	Thrust load A-direction (N)	784
	Thrust load B-direction (N)	980
During operation	Radial load P-direction (N)	784
	Thrust load A, B-direction (N)	343

• For details of Note)1 to Note)4, refer to P.165.
• Dimensions of Driver, refer to P.49.
*1 □□ in the motor part number represents the motor specifications.
*2 Basic type and RS485 communication type are "Position control type".
Detail of model designation, refer to P.18.
*3 When using a rotary encoder as an incremental system (not using multi-turn data), do not connect a battery for absolute encoder.

Torque characteristics (at AC200 V of power voltage <Dotted line represents the torque at 10 % less supply voltage.>)

With oil seal

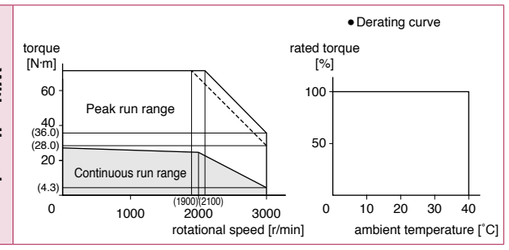

Dimensions

① Encoder connector (Large size JL10)
② Motor/Brake connector

Mass: Without brake: 15.6 kg
With brake: 19.0 kg

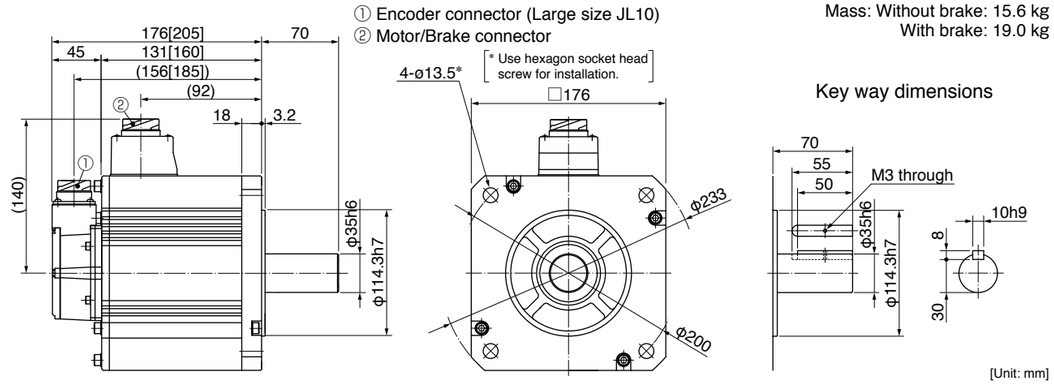

Encoder connector (Small size JN2), refer to P.113. ● Figures in [ ] represent the dimensions with brake.

<Cautions> Reduce the moment of inertia ratio if high speed response operation is required.
Dimensions are subject to change without notice. Contact us or a dealer for the latest information.
Read the Instruction Manual carefully and understand all precautions and remarks before using the products.

200 V MGMF 0.85 kW [Middle inertia Low speed/High torque type 130 mm sq.]

Specifications

			AC200 V
Motor model *1	IP67		MGMF092L1□□
Applicable driver	Model No.	Multifunction type	MDDLT45SF
		RS485 communication type *2	MDDLN45SG
		Basic type *2	MDDLN45SE
	Frame symbol		D-frame
Power supply capacity		(kVA)	1.8
Rated output		(W)	850
Rated torque		(N·m)	5.41
Continuous stall torque		(N·m)	5.41
Momentary Max. peak torque		(N·m)	14.3
Rated current		(A(rms))	5.9
Max. current		(A(o-p))	22
Regenerative brake frequency (times/min) Note)1	Without option		No limit Note)2
	DV0P4284		No limit Note)2
Rated rotational speed		(r/min)	1500
Max. rotational speed		(r/min)	3000
Moment of inertia of rotor ($\times 10^{-4}$ kg·m^2)	Without brake		6.18
	With brake		7.40
Recommended moment of inertia ratio of the load and the rotor Note)3			10 times or less
Rotary encoder specifications *3			23-bit Absolute
	Resolution per single turn		8388608

• **Brake specifications** (For details, refer to P.167)
(This brake will be released when it is energized. Do not use this for braking the motor in motion.)

Static friction torque (N·m)	13.7 or more
Engaging time (ms)	100 or less
Releasing time (ms) Note)4	50 or less
Exciting current (DC) (A)	0.79±10 %
Releasing voltage (DC) (V)	2 or more
Exciting voltage (DC) (V)	24±2.4

• **Permissible load** (For details, refer to P.166)

During assembly	Radial load P-direction (N)	980
	Thrust load A-direction (N)	588
	Thrust load B-direction (N)	686
During operation	Radial load P-direction (N)	686
	Thrust load A, B-direction (N)	196

• For details of Note)1 to Note)4, refer to P.165.
• Dimensions of Driver, refer to P.48.
*1 □□ in the motor part number represents the motor specifications.
*2 Basic type and RS485 communication type are "Position control type".
Detail of model designation, refer to P.18.
*3 When using a rotary encoder as an incremental system (not using multi-turn data), do not connect a battery for absolute encoder.

Torque characteristics (at AC200 V of power voltage <Dotted line represents the torque at 10 % less supply voltage.>)

With oil seal

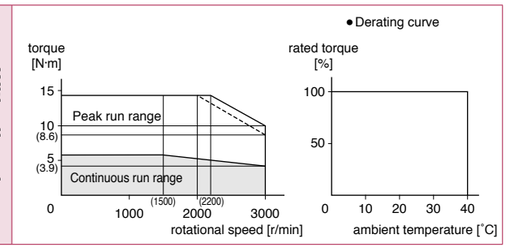

Dimensions

Mass: Without brake: 4.6 kg
With brake: 6.1 kg

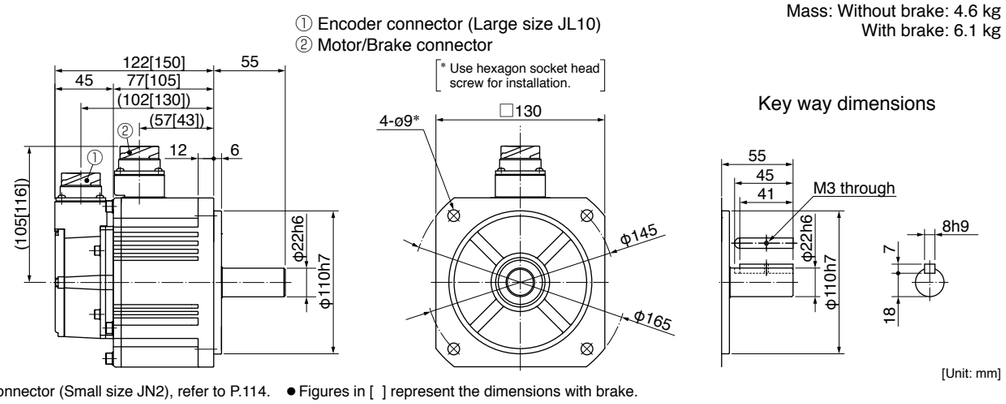

Encoder connector (Small size JN2), refer to P.114. ● Figures in [ ] represent the dimensions with brake.

<Cautions> Reduce the moment of inertia ratio if high speed response operation is required.
Dimensions are subject to change without notice. Contact us or a dealer for the latest information.
Read the Instruction Manual carefully and understand all precautions and remarks before using the products.

200 V MGMF 1.3 kW [Middle inertia Low speed/High torque type 130 mm sq.]

Specifications

			AC200 V
Motor model *1	IP67		MGMF132L1□□
Applicable driver	Model No.	Multifunction type	MDDLT55SF
		RS485 communication type *2	MDDLN55SG
		Basic type *2	MDDLN55SE
	Frame symbol		D-frame
Power supply capacity		(kVA)	2.3
Rated output		(W)	1300
Rated torque		(N·m)	8.28
Continuous stall torque		(N·m)	8.28
Momentary Max. peak torque		(N·m)	23.3
Rated current		(A(rms))	9.3
Max. current		(A(o-p))	37
Regenerative brake frequency (times/min) Note)1	Without option		No limit Note)2
	DV0P4284		No limit Note)2
Rated rotational speed		(r/min)	1500
Max. rotational speed		(r/min)	3000
Moment of inertia of rotor ($\times 10^{-4}$ kg·m^2)	Without brake		9.16
	With brake		10.4
Recommended moment of inertia ratio of the load and the rotor Note)3			10 times or less
Rotary encoder specifications *3			23-bit Absolute
	Resolution per single turn		8388608

• **Brake specifications** (For details, refer to P.167)
(This brake will be released when it is energized. Do not use this for braking the motor in motion.)

Static friction torque (N·m)	13.7 or more
Engaging time (ms)	100 or less
Releasing time (ms) Note)4	50 or less
Exciting current (DC) (A)	0.79±10 %
Releasing voltage (DC) (V)	2 or more
Exciting voltage (DC) (V)	24±2.4

• **Permissible load** (For details, refer to P.166)

During assembly	Radial load P-direction (N)	980
	Thrust load A-direction (N)	588
	Thrust load B-direction (N)	686
During operation	Radial load P-direction (N)	686
	Thrust load A, B-direction (N)	196

• For details of Note)1 to Note)4, refer to P.165.
• Dimensions of Driver, refer to P.48.
*1 □□ in the motor part number represents the motor specifications.
*2 Basic type and RS485 communication type are "Position control type".
Detail of model designation, refer to P.18.
*3 When using a rotary encoder as an incremental system (not using multi-turn data), do not connect a battery for absolute encoder.

Torque characteristics (at AC200 V of power voltage <Dotted line represents the torque at 10 % less supply voltage.>)

With oil seal

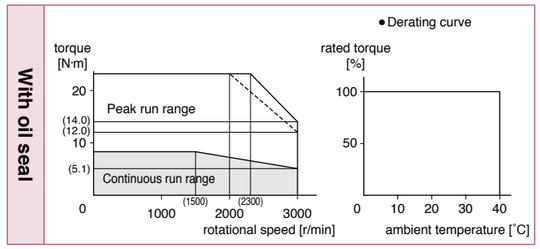

Dimensions

Mass: Without brake: 5.7 kg
With brake: 7.5 kg

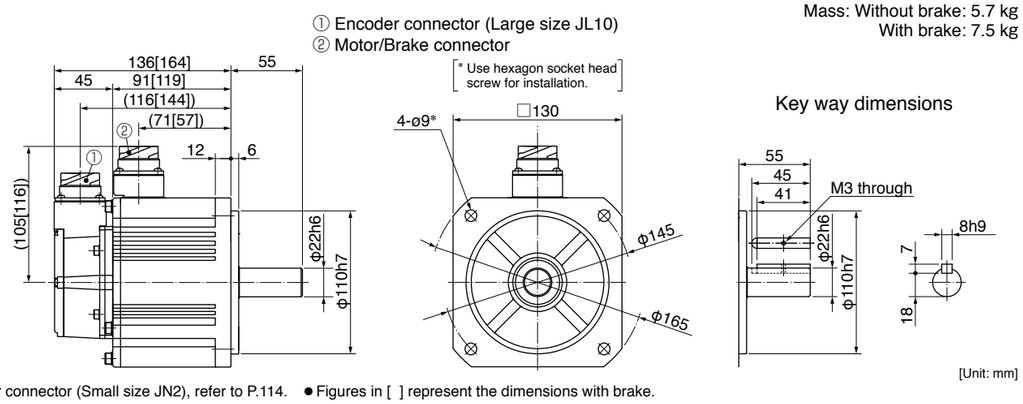

Encoder connector (Small size JN2), refer to P.114. ● Figures in [ ] represent the dimensions with brake.

<Cautions> Reduce the moment of inertia ratio if high speed response operation is required.
Dimensions are subject to change without notice. Contact us or a dealer for the latest information.
Read the Instruction Manual carefully and understand all precautions and remarks before using the products.

200 V MGMF 1.8 kW [Middle inertia Low speed/High torque type 130 mm sq.]

Specifications

			AC200 V
Motor model *1	IP67		MGMF182L1□□
Applicable driver	Model No.	Multifunction type	MEDLT83SF
		RS485 communication type *2	MEDLN83SG
		Basic type *2	MEDLN83SE
	Frame symbol		E-frame
Power supply capacity		(kVA)	3.8
Rated output		(W)	1800
Rated torque		(N·m)	11.5
Continuous stall torque		(N·m)	11.5
Momentary Max. peak torque		(N·m)	28.7
Rated current		(A(rms))	11.8
Max. current		(A(o-p))	42
Regenerative brake frequency (times/min) Note)1	Without option		No limit Note)2
	DV0P4285×2		No limit Note)2
Rated rotational speed		(r/min)	1500
Max. rotational speed		(r/min)	3000
Moment of inertia of rotor ($\times 10^{-4}$ kg·m^2)	Without brake		12.1
	With brake		13.3
Recommended moment of inertia ratio of the load and the rotor Note)3			10 times or less
Rotary encoder specifications *3			23-bit Absolute
	Resolution per single turn		8388608

• **Brake specifications** (For details, refer to P.167)
(This brake will be released when it is energized. Do not use this for braking the motor in motion.)

Static friction torque (N·m)	13.7 or more
Engaging time (ms)	100 or less
Releasing time (ms) Note)4	50 or less
Exciting current (DC) (A)	0.79±10 %
Releasing voltage (DC) (V)	2 or more
Exciting voltage (DC) (V)	24±2.4

• **Permissible load** (For details, refer to P.166)

During assembly	Radial load P-direction (N)	980
	Thrust load A-direction (N)	588
	Thrust load B-direction (N)	686
During operation	Radial load P-direction (N)	686
	Thrust load A, B-direction (N)	196

• For details of Note)1 to Note)4, refer to P.165.
• Dimensions of Driver, refer to P.49.
*1 □□ in the motor part number represents the motor specifications.
*2 Basic type and RS485 communication type are "Position control type".
Detail of model designation, refer to P.18.
*3 When using a rotary encoder as an incremental system (not using multi-turn data), do not connect a battery for absolute encoder.

Torque characteristics (at AC200 V of power voltage <Dotted line represents the torque at 10 % less supply voltage.>)

With oil seal

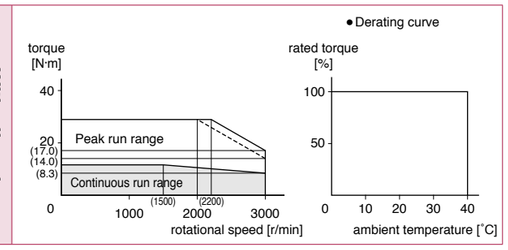

Dimensions

Mass: Without brake: 6.9 kg
With brake: 8.4 kg

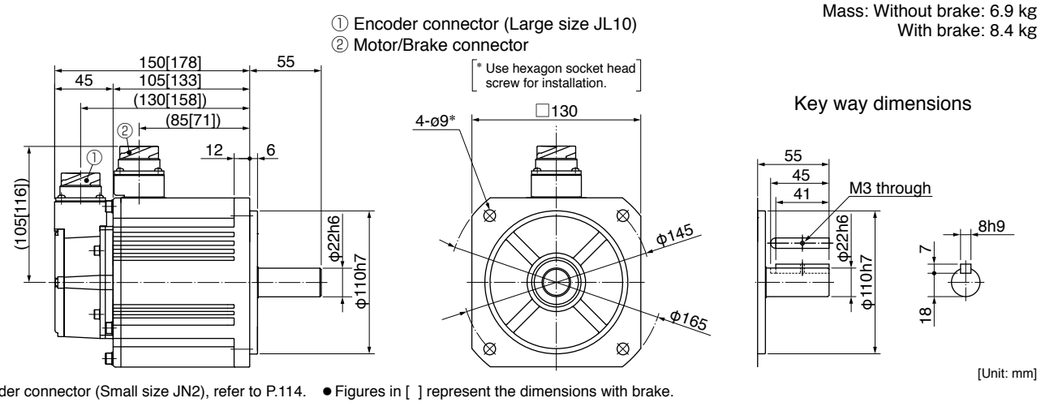

Encoder connector (Small size JN2), refer to P.114. ● Figures in [ ] represent the dimensions with brake.

<Cautions> Reduce the moment of inertia ratio if high speed response operation is required.
Dimensions are subject to change without notice. Contact us or a dealer for the latest information.
Read the Instruction Manual carefully and understand all precautions and remarks before using the products.

200 V MGMF 2.9 kW [Middle inertia Low speed/High torque type 176 mm sq.]

Specifications

			AC200 V
Motor model *1	IP67		MGMF292L1□□
Applicable driver	Model No.	Multifunction type	MFDLTB3SF
		RS485 communication type *2	MFDLNB3SG
		Basic type *2	MFDLNB3SE
	Frame symbol		F-frame
Power supply capacity		(kVA)	7.5
Rated output		(W)	2900
Rated torque		(N·m)	18.5
Continuous stall torque		(N·m)	18.5
Momentary Max. peak torque		(N·m)	45.2
Rated current		(A(rms))	19.3
Max. current		(A(o-p))	67
Regenerative brake frequency (times/min) Note)1	Without option		No limit Note)2
	DV0P4285×2		No limit Note)2
Rated rotational speed		(r/min)	1500
Max. rotational speed		(r/min)	3000
Moment of inertia of rotor ($\times 10^{-4}$ kg·m^2)	Without brake		46.9
	With brake		52.3
Recommended moment of inertia ratio of the load and the rotor Note)3			10 times or less
Rotary encoder specifications *3			23-bit Absolute
	Resolution per single turn		8388608

• **Brake specifications** (For details, refer to P.167)
(This brake will be released when it is energized. Do not use this for braking the motor in motion.)

Static friction torque (N·m)	25.0 or more
Engaging time (ms)	80 or less
Releasing time (ms) Note)4	25 or less
Exciting current (DC) (A)	1.29±10 %
Releasing voltage (DC) (V)	2 or more
Exciting voltage (DC) (V)	24±2.4

• **Permissible load** (For details, refer to P.166)

During assembly	Radial load P-direction (N)	1666
	Thrust load A-direction (N)	784
	Thrust load B-direction (N)	980
During operation	Radial load P-direction (N)	1176
	Thrust load A, B-direction (N)	490

• For details of Note)1 to Note)4, refer to P.165.
• Dimensions of Driver, refer to P.49.
*1 □□ in the motor part number represents the motor specifications.
*2 Basic type and RS485 communication type are "Position control type".
Detail of model designation, refer to P.18.
*3 When using a rotary encoder as an incremental system (not using multi-turn data), do not connect a battery for absolute encoder.

Torque characteristics (at AC200 V of power voltage <Dotted line represents the torque at 10 % less supply voltage.>)

With oil seal

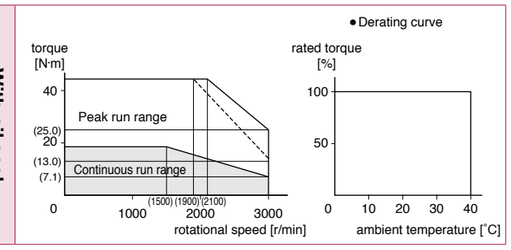

Dimensions

Mass: Without brake: 13.4 kg
With brake: 16.8 kg

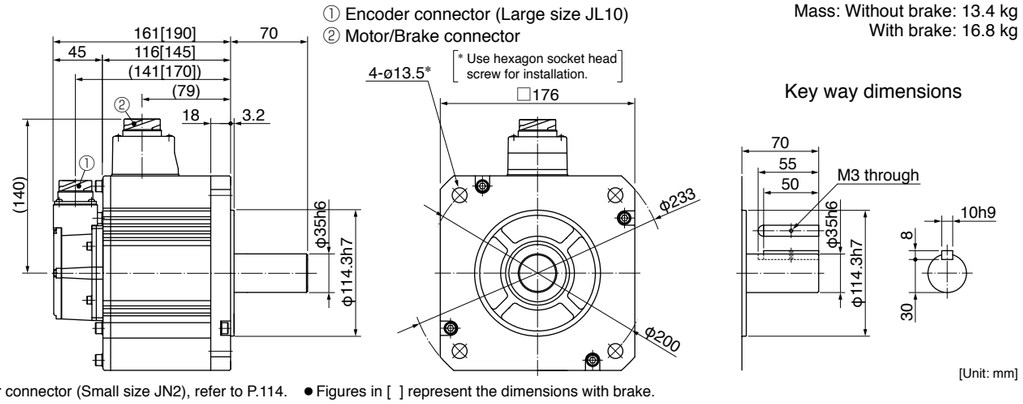

Encoder connector (Small size JN2), refer to P.114. ● Figures in [ ] represent the dimensions with brake.

<Cautions> Reduce the moment of inertia ratio if high speed response operation is required.
Dimensions are subject to change without notice. Contact us or a dealer for the latest information.
Read the Instruction Manual carefully and understand all precautions and remarks before using the products.

200 V MGMF 4.4 kW [Middle inertia / Low speed/High torque type / 176 mm sq.]

Specifications

			AC200 V
Motor model *1	IP67		MGMF442L1□□
Applicable driver	Model No.	Multifunction type	MFDLTB3SF
		RS485 communication type *2	MFDLNB3SG
		Basic type *2	MFDLNB3SE
	Frame symbol		F-frame
Power supply capacity (kVA)			7.5
Rated output (W)			4400
Rated torque (N·m)			28.0
Continuous stall torque (N·m)			28.0
Momentary Max. peak torque (N·m)			70.0
Rated current (A(rms))			27.2
Max. current (A(o-p))			96
Regenerative brake frequency (times/min) Note)1	Without option		No limit Note)2
	DV0P4285×2		No limit Note)2
Rated rotational speed (r/min)			1500
Max. rotational speed (r/min)			3000
Moment of inertia of rotor ($\times 10^{-4}$ kg·m^2)	Without brake		58.2
	With brake		63.0
Recommended moment of inertia ratio of the load and the rotor Note)3			10 times or less
Rotary encoder specifications *3			23-bit Absolute
	Resolution per single turn		8388608

• Brake specifications (For details, refer to P.167)
(This brake will be released when it is energized. Do not use this for braking the motor in motion.)

Static friction torque (N·m)	44.1 or more
Engaging time (ms)	150 or less
Releasing time (ms) Note)4	30 or less
Exciting current (DC) (A)	1.29±10 %
Releasing voltage (DC) (V)	2 or more
Exciting voltage (DC) (V)	24±2.4

• Permissible load (For details, refer to P.166)

During assembly	Radial load P-direction (N)	1666
	Thrust load A-direction (N)	784
	Thrust load B-direction (N)	980
During operation	Radial load P-direction (N)	1470
	Thrust load A, B-direction (N)	490

• For details of Note)1 to Note)4, refer to P.165.
• Dimensions of Driver, refer to P.49.
*1 □□ in the motor part number represents the motor specifications.
*2 Basic type and RS485 communication type are "Position control type".
Detail of model designation, refer to P.18.
*3 When using a rotary encoder as an incremental system (not using multi-turn data), do not connect a battery for absolute encoder.

Torque characteristics (at AC200 V of power voltage <Dotted line represents the torque at 10 % less supply voltage.>)

With oil seal

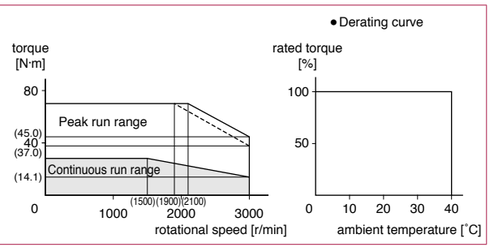

Dimensions

① Encoder connector (Large size JL10)
② Motor/Brake connector

Mass: Without brake: 15.6 kg
With brake: 19.0 kg

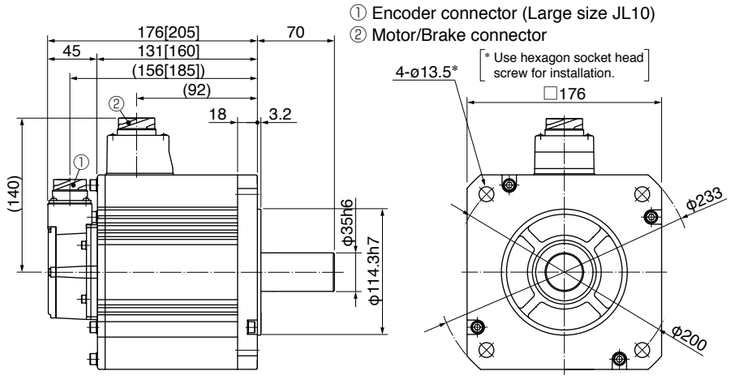

Key way dimensions

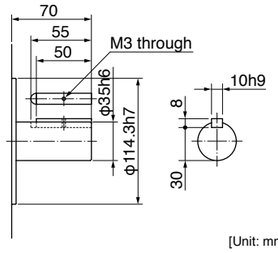

[Unit: mm]

Encoder connector (Small size JN2), refer to P.114. ● Figures in [ ] represent the dimensions with brake.

<Cautions> Reduce the moment of inertia ratio if high speed response operation is required.
Dimensions are subject to change without notice. Contact us or a dealer for the latest information.
Read the Instruction Manual carefully and understand all precautions and remarks before using the products.

MSMF 50 W to 200 W
Connector type (IP67)

● MSMF5AZL1□□

[Unit: mm]

<without brake>

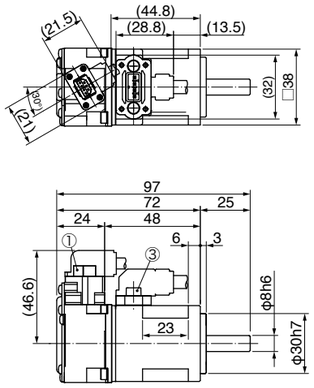

<with brake>

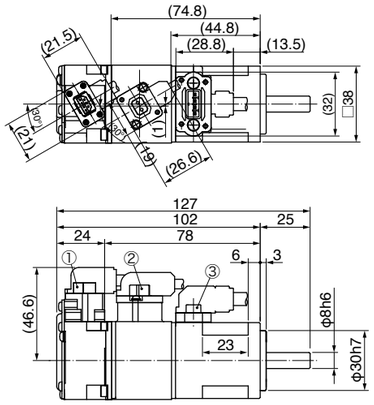

① Encoder connector
② Brake connector
③ Motor connector

● MSMF01□L1□□

[Unit: mm]

<without brake>

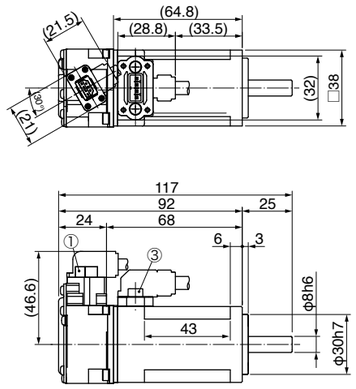

<with brake>

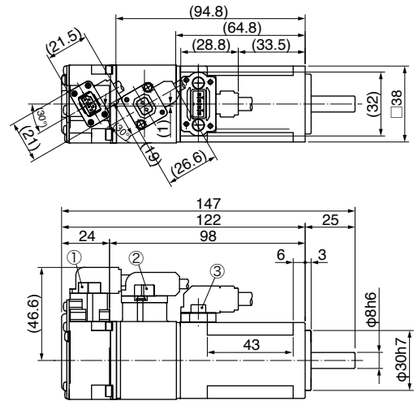

① Encoder connector
② Brake connector
③ Motor connector

● MSMF02□L1□□

[Unit: mm]

<without brake>

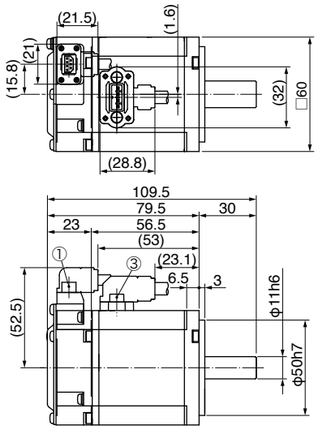

<with brake>

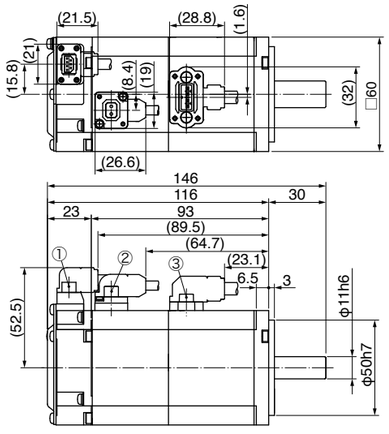

① Encoder connector
② Brake connector
③ Motor connector

* For motor specifications and mounting dimensions (on flange face), refer to P.51 to P.56.

MSMF 400 W to 1000 W
Connector type (IP67)

● **MSMF042L1□□** [Unit: mm]

<without brake>

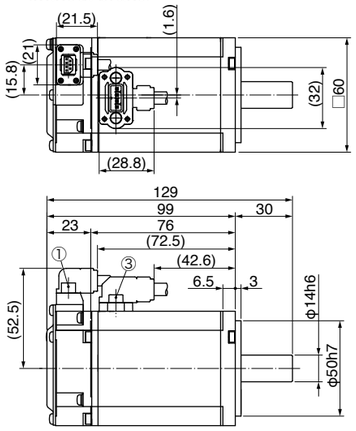

<with brake>

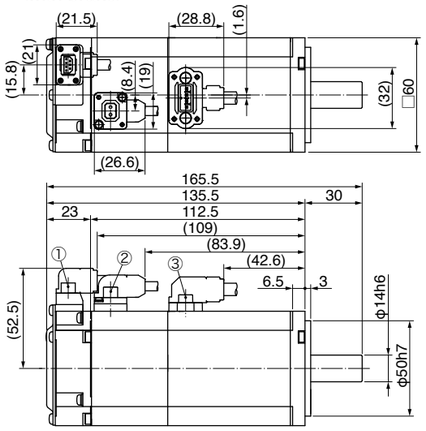

① Encoder connector
② Brake connector
③ Motor connector

● **MSMF082L1□□** [Unit: mm]

<without brake>

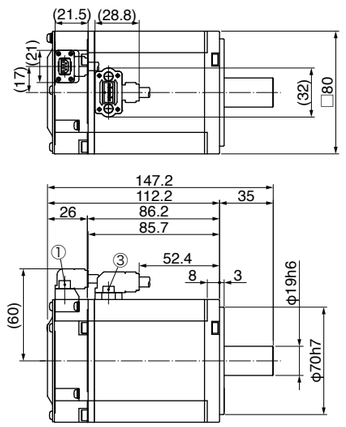

<with brake>

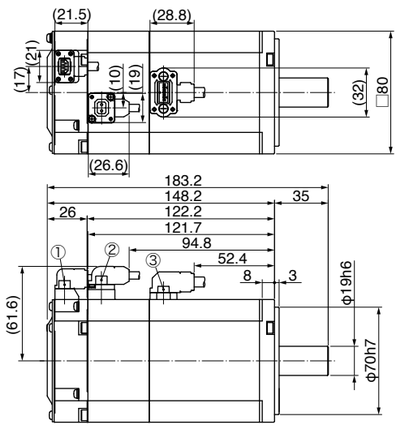

① Encoder connector
② Brake connector
③ Motor connector

● **MSMF092L1□□** [Unit: mm]

<without brake>

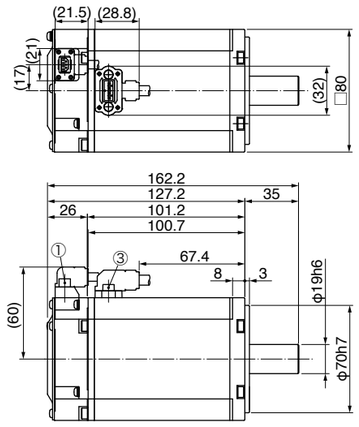

<with brake>

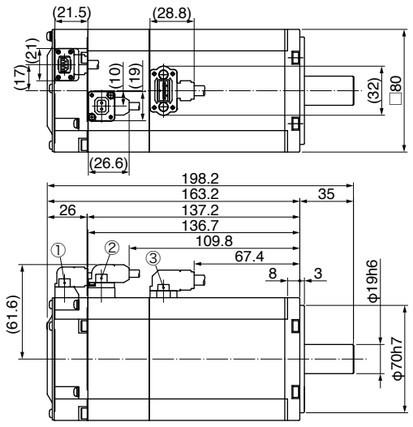

① Encoder connector
② Brake connector
③ Motor connector

* For motor specifications and mounting dimensions (on flange face), refer to P.57 to P.60.

MSMF 1.0 kW to 5.0 kW
Small size connector (JN2)

● **MSMF102L1□□** [Unit: mm]

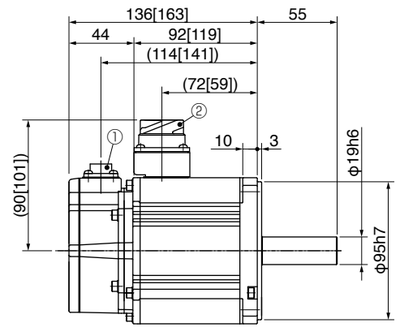

① Encoder connector
② Motor/Brake connector

● Figures in [ ] represent the dimensions with brake.

● **MSMF302L1□□** [Unit: mm]

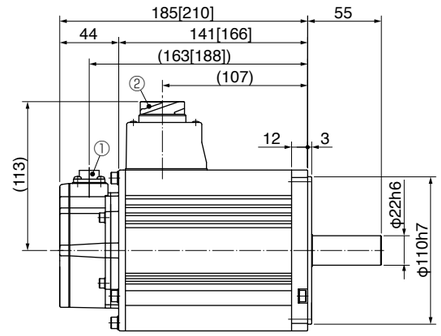

① Encoder connector
② Motor/Brake connector

● Figures in [ ] represent the dimensions with brake.

● **MSMF152L1□□** [Unit: mm]

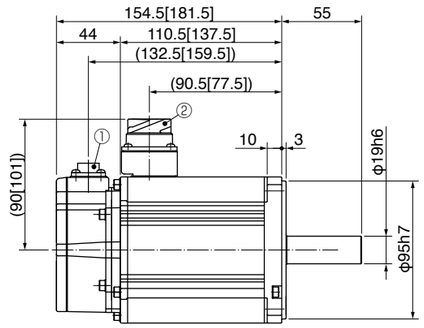

① Encoder connector
② Motor/Brake connector

● Figures in [ ] represent the dimensions with brake.

● **MSMF402L1□□** [Unit: mm]

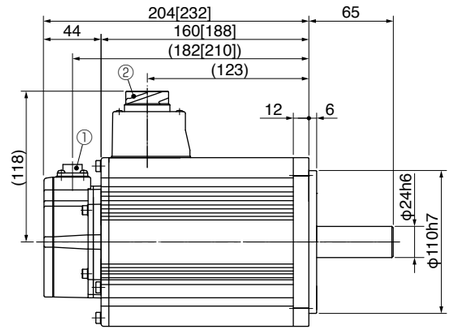

① Encoder connector
② Motor/Brake connector

● Figures in [ ] represent the dimensions with brake.

● **MSMF202L1□□** [Unit: mm]

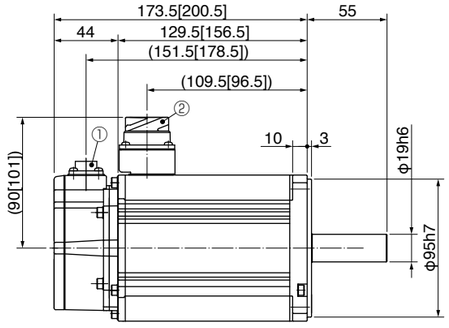

① Encoder connector
② Motor/Brake connector

● Figures in [ ] represent the dimensions with brake.

● **MSMF502L1□□** [Unit: mm]

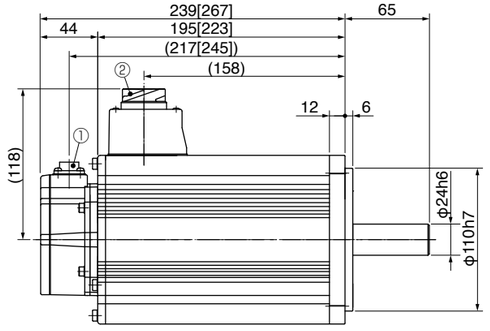

① Encoder connector
② Motor/Brake connector

● Figures in [ ] represent the dimensions with brake.

* For motor specifications and mounting dimensions (on flange face), refer to P.61 to P.66.

MQMF 100 W to 400 W
Leadwire type (IP65) with protective lip/ with oil seal

● MQMF01□L1□□

<without brake> <with brake>

① Encoder connector
② Brake connector
③ Motor connector

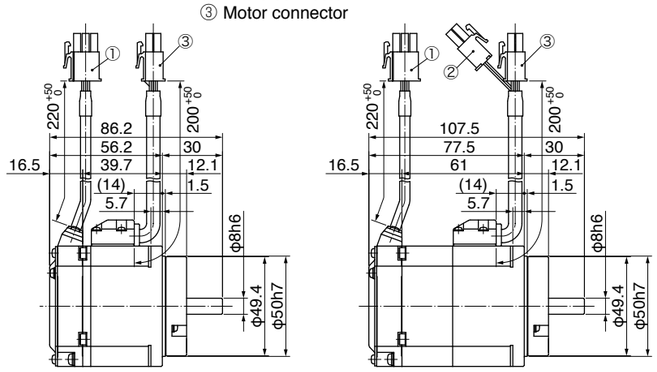

Key way dimensions [Unit: mm]
<Key way, center tap shaft>

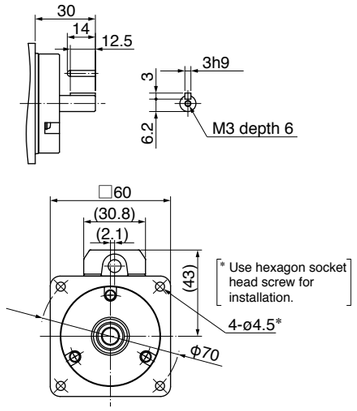

● MQMF02□L1□□

<without brake> <with brake>

① Encoder connector
② Brake connector
③ Motor connector

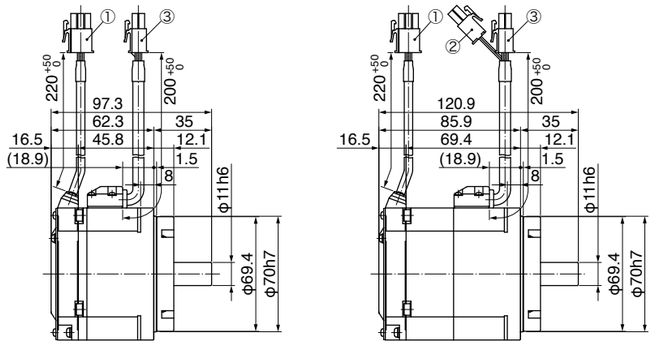

Key way dimensions [Unit: mm]
<Key way, center tap shaft>

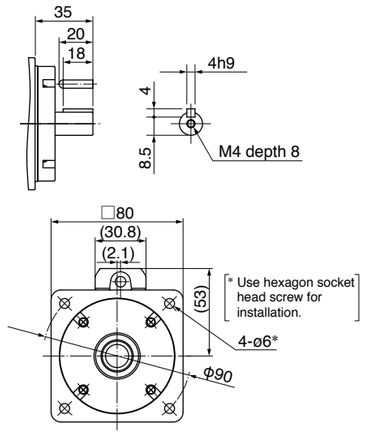

● MQMF04□L1□□

<without brake> <with brake>

① Encoder connector
② Brake connector
③ Motor connector

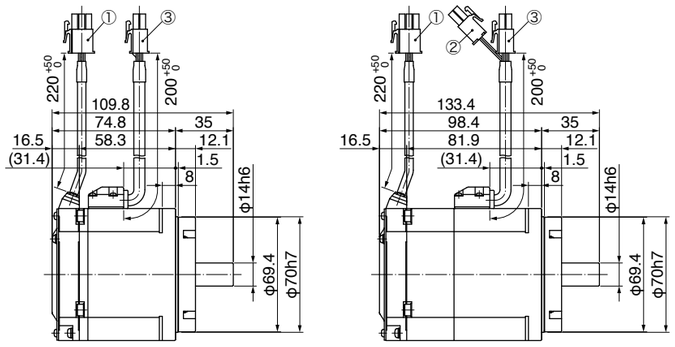

Key way dimensions [Unit: mm]
<Key way, center tap shaft>

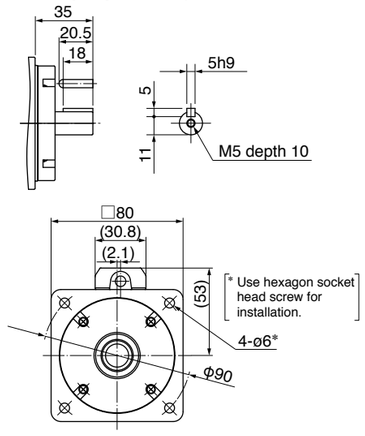

* For motors specifications, refer to P.67 to P.72.

MQMF 100 W, 200 W
Connector type (IP67)

● MQMF01□L1□□

■ without protective lip/ with oil seal

① Encoder connector
② Motor/Brake connector

<without brake> <with brake>

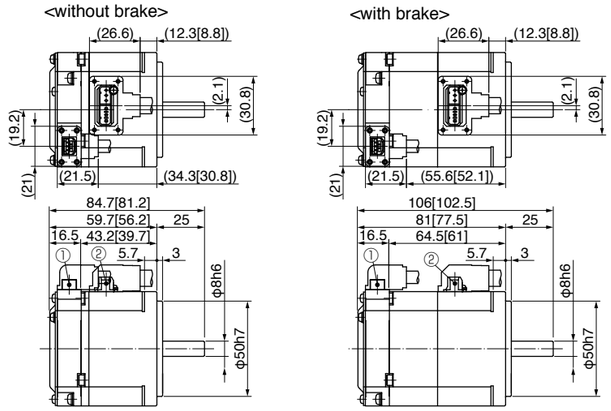

Key way dimensions [Unit: mm]
<Key way, center tap shaft>

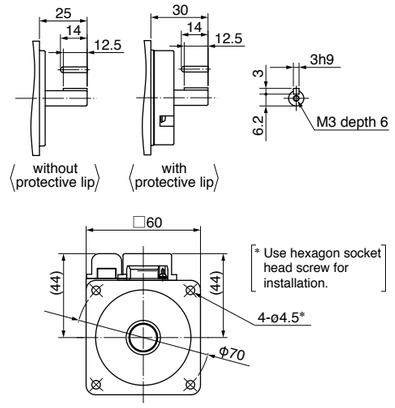

■ with protective lip/ with oil seal

* Figures in [ ] represent the dimensions without oil seal.

<without brake> <with brake>

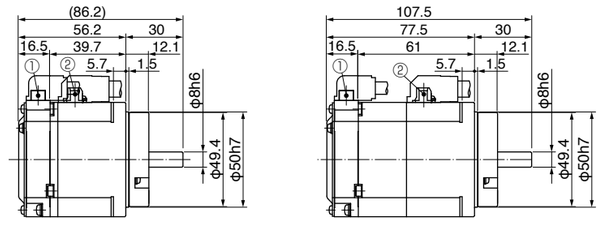

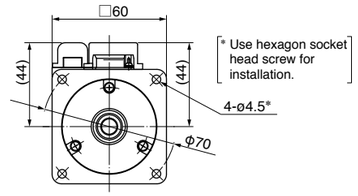

● MQMF02□L1□□

■ without protective lip/ with oil seal

① Encoder connector
② Motor/Brake connector

<without brake> <with brake>

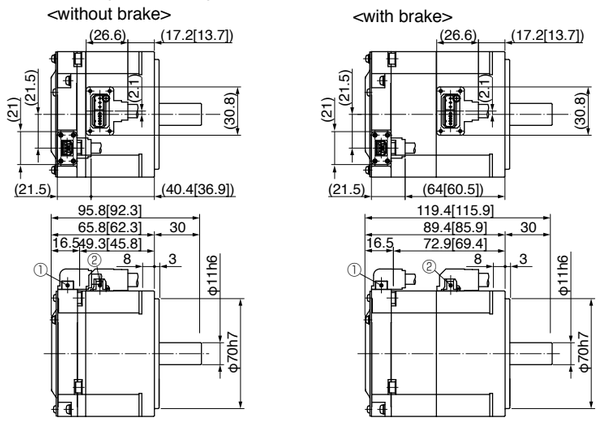

Key way dimensions [Unit: mm]
<Key way, center tap shaft>

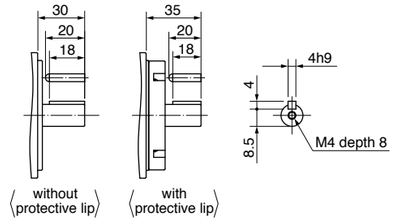

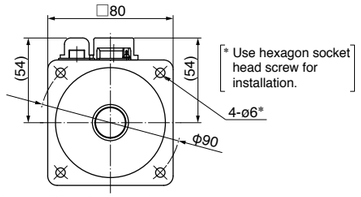

■ with protective lip/ with oil seal

* Figures in [ ] represent the dimensions without oil seal.

<without brake> <with brake>

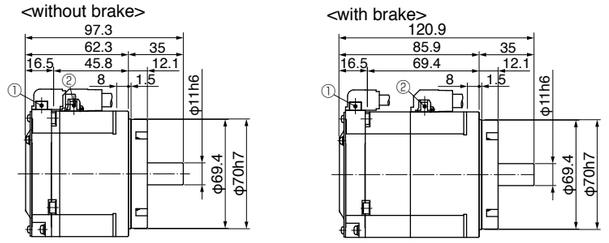

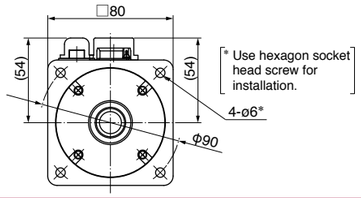

* For motors specifications, refer to P.67 to P.70.

MQMF 400 W
Connector type (IP67)

● **MQMF04□L1□□**

■ without protective lip/ with oil seal

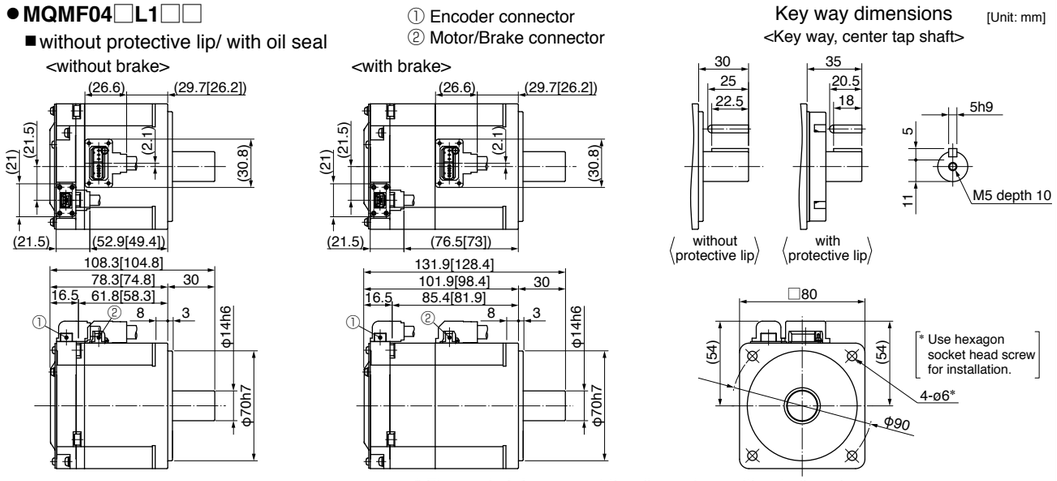

* Figures in [ ] represent the dimensions without oil seal.

■ with protective lip/ with oil seal

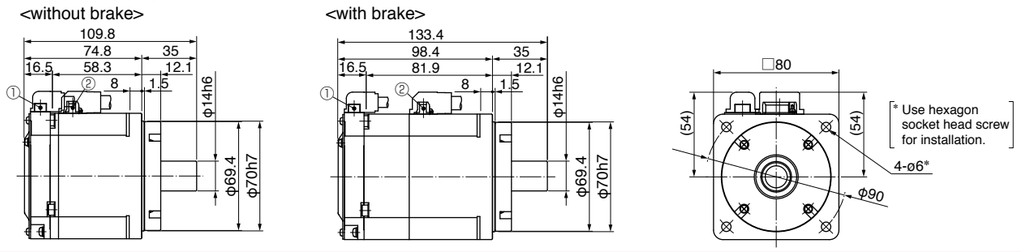

* For motors specifications, refer to P.71, P.72.

MHMF 750 W, 1000 W
Leadwire type (IP65) with oil seal

● **MHMF082L1□□**

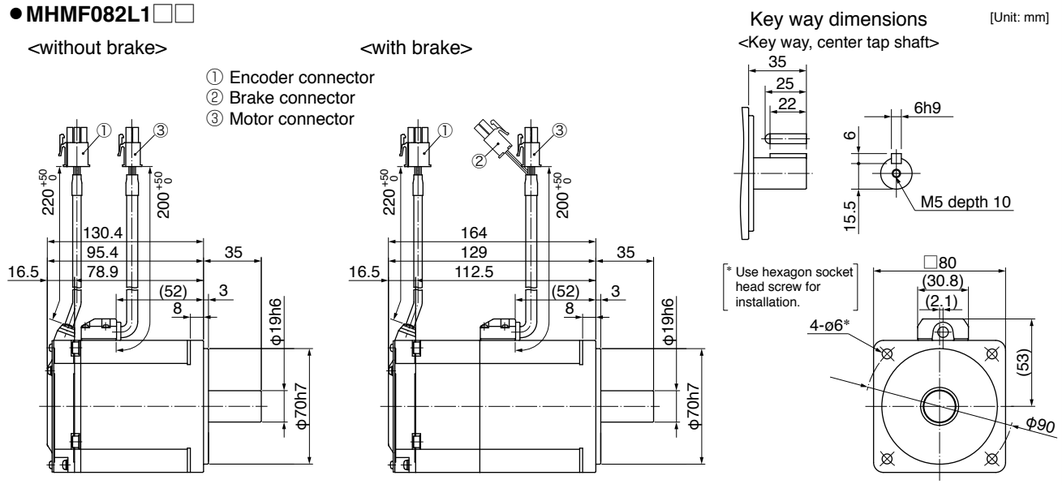

● **MHMF092L1□□**

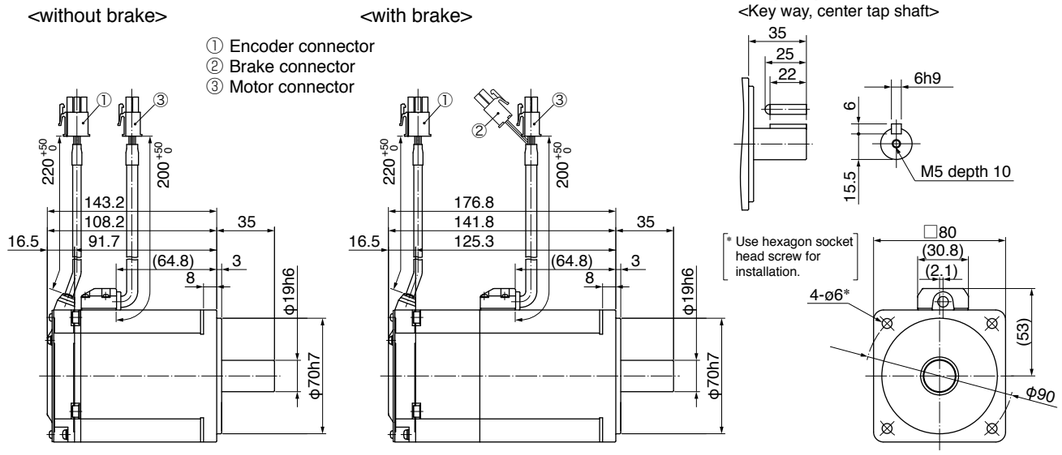

* For motors specifications, refer to P.81, P.82.

MHMF 50 W to 200 W

Leadwire type (IP65) with protective lip/ with oil seal

● MHMF5AZL1□□

<without brake> <with brake>

① Encoder connector
② Brake connector
③ Motor connector

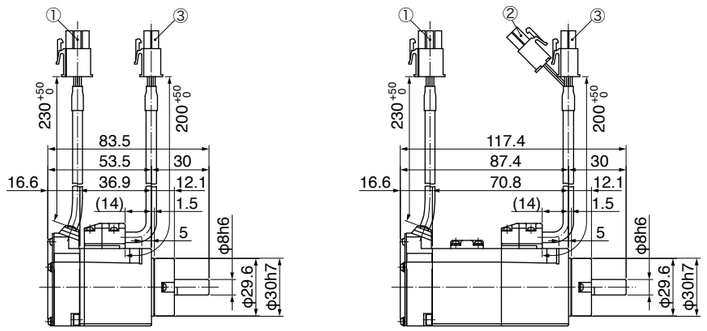

Key way dimensions [Unit: mm]
<Key way, center tap shaft>

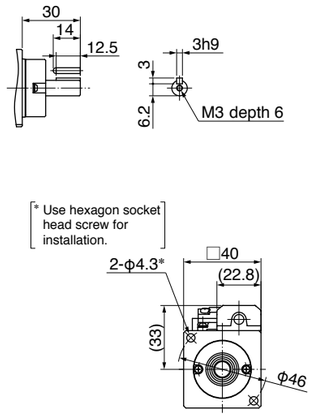

● MHMF01□L1□□

<without brake> <with brake>

① Encoder connector
② Brake connector
③ Motor connector

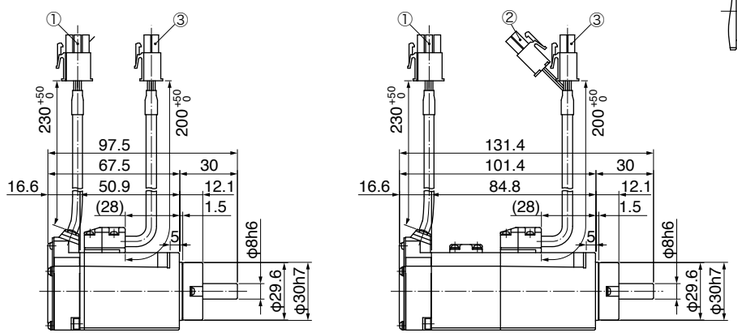

Key way dimensions [Unit: mm]
<Key way, center tap shaft>

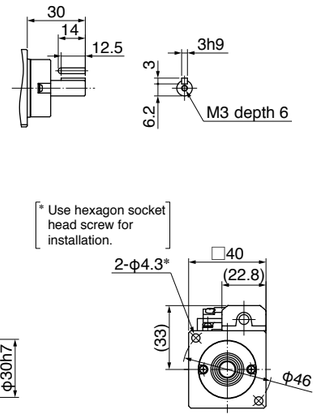

● MHMF02□L1□□

<without brake> <with brake>

① Encoder connector
② Brake connector
③ Motor connector

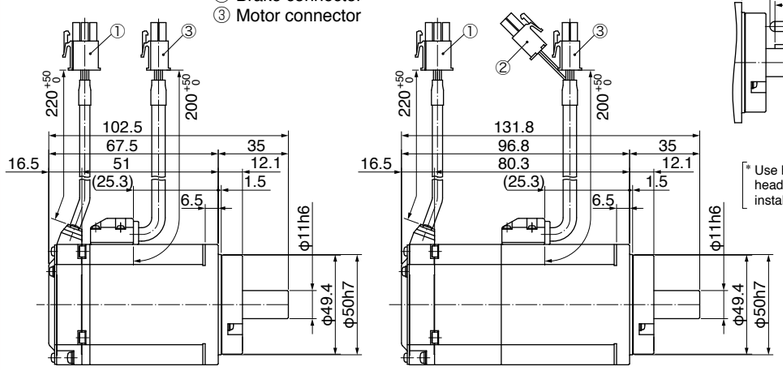

Key way dimensions [Unit: mm]
<Key way, center tap shaft>

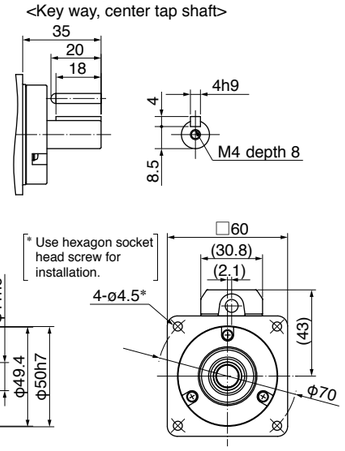

* For motors specifications, refer to P.73 to P.78.

MHMF 400 W to 1000 W

Leadwire type (IP65) with protective lip/ with oil seal

● MHMF04□L1□□

<without brake> <with brake>

① Encoder connector
② Brake connector
③ Motor connector

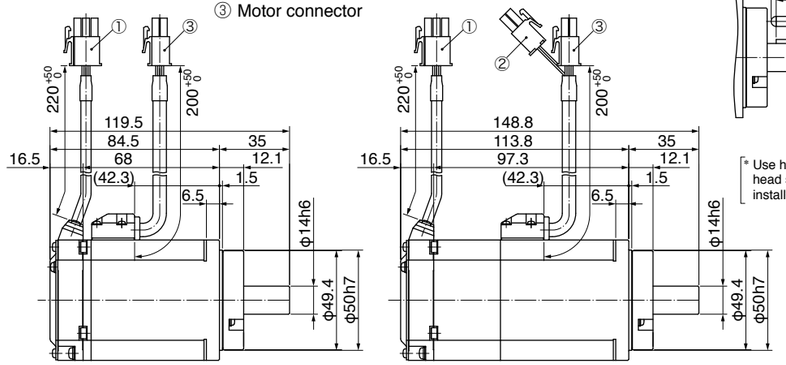

Key way dimensions [Unit: mm]
<Key way, center tap shaft>

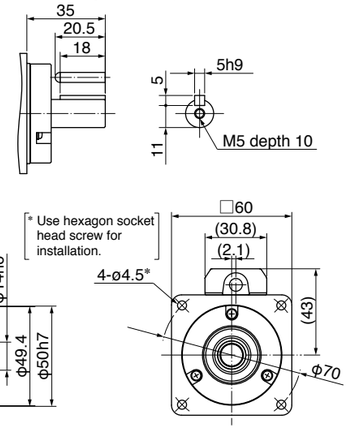

● MHMF082L1□□

<without brake> <with brake>

① Encoder connector
② Brake connector
③ Motor connector

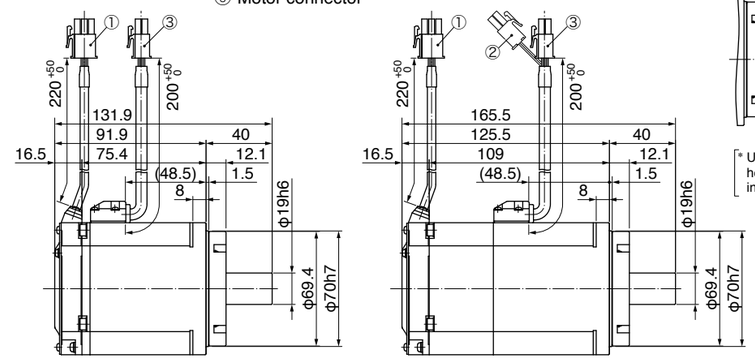

Key way dimensions [Unit: mm]
<Key way, center tap shaft>

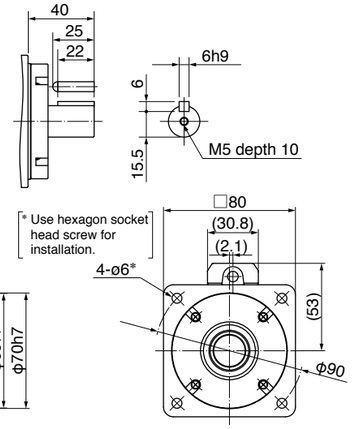

● MHMF092L1□□

<without brake> <with brake>

① Encoder connector
② Brake connector
③ Motor connector

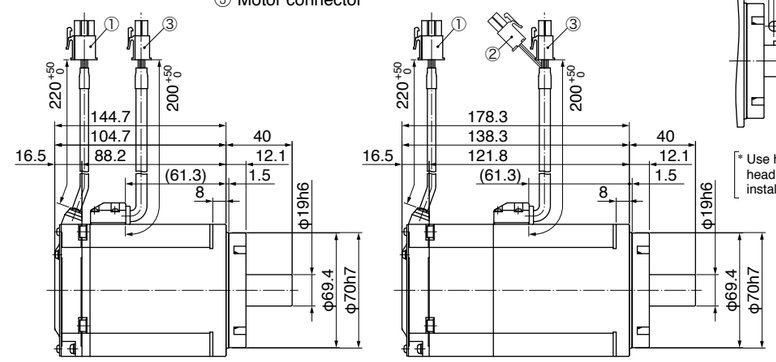

Key way dimensions [Unit: mm]
<Key way, center tap shaft>

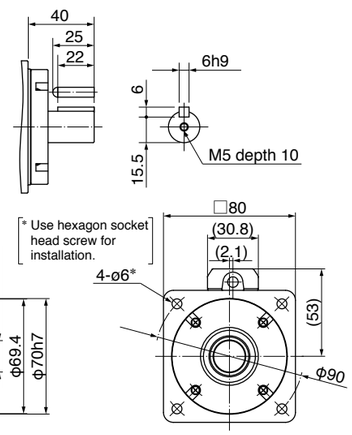

* For motors specifications, refer to P.79 to P.82.

MHMF 50 W, 100 W
Connector type (IP67)

● MHMF5AZL1□□

■ without protective lip/ with oil seal
<without brake>

① Encoder connector
② Motor/Brake connector

<with brake>

[Unit: mm]

Key way dimensions
<Key way, center tap shaft>

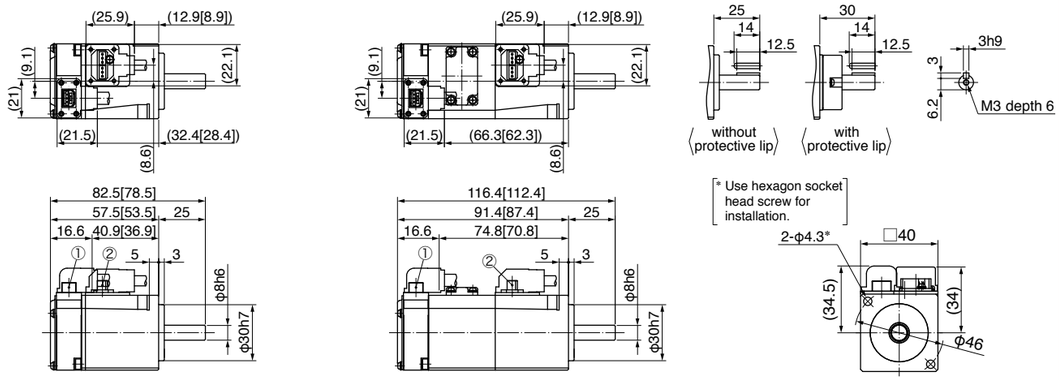

* Figures in [ ] represent the dimensions without oil seal.

■ with protective lip/ with oil seal
<without brake>

<with brake>

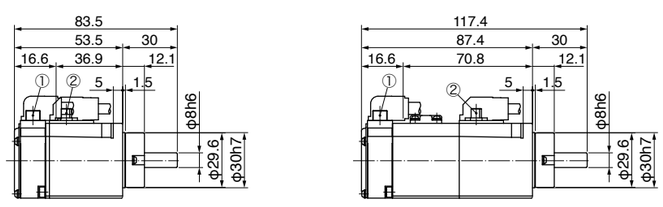

● MHMF01□L1□□

■ without protective lip/ with oil seal
<without brake>

① Encoder connector
② Motor/Brake connector

<with brake>

[Unit: mm]

Key way dimensions
<Key way, center tap shaft>

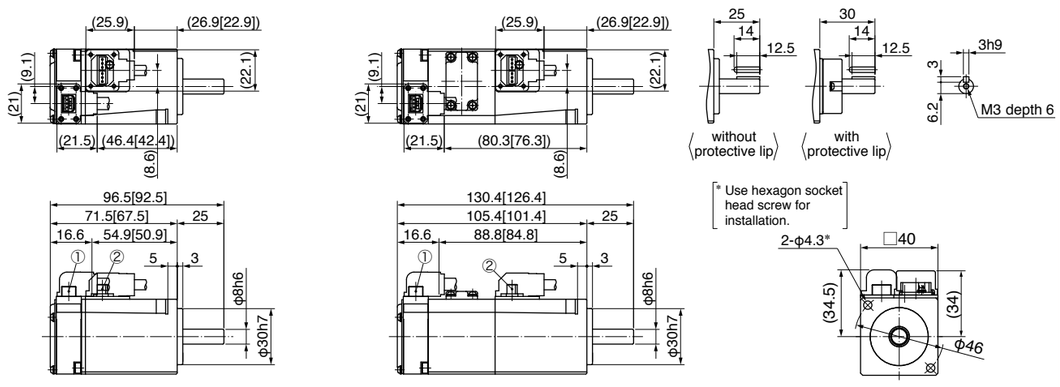

* Figures in [ ] represent the dimensions without oil seal.

■ with protective lip/ with oil seal
<without brake>

<with brake>

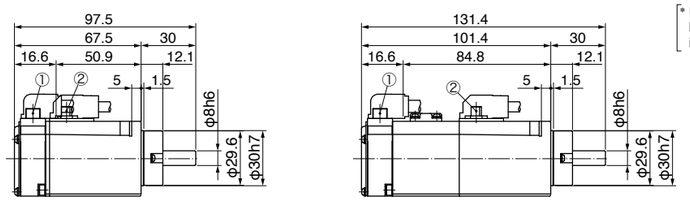

* For motors specifications, refer to P.73 to P.76.

MHMF 200 W, 400 W
Connector type (IP67)

● MHMF02□L1□□

■ without protective lip/ with oil seal
<without brake>

① Encoder connector
② Motor/Brake connector

<with brake>

Key way dimensions [Unit: mm]
<Key way, center tap shaft>

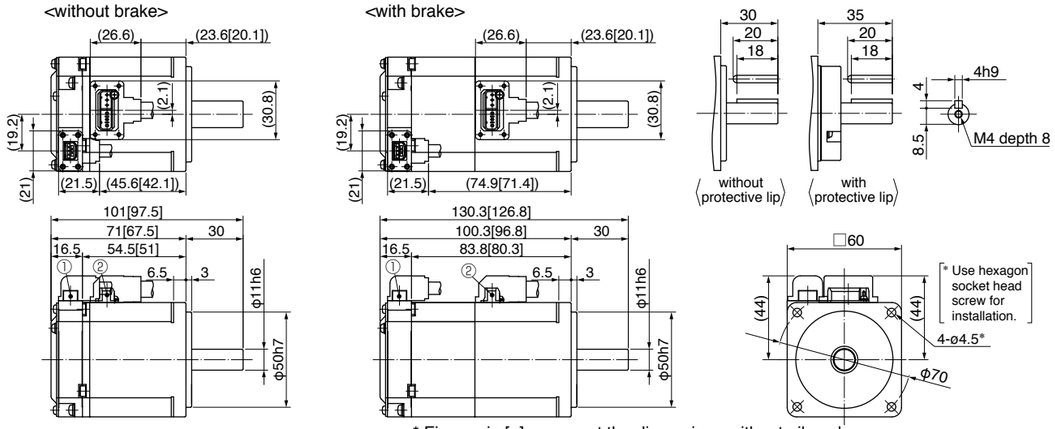

* Figures in [ ] represent the dimensions without oil seal.

■ with protective lip/ with oil seal
<without brake>

<with brake>

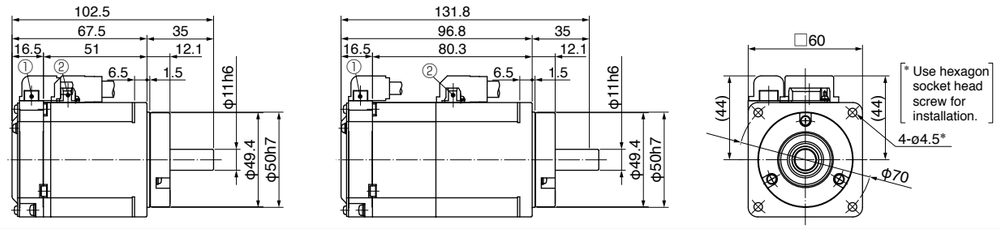

● MHMF04□L1□□

■ without protective lip/ with oil seal
<without brake>

① Encoder connector
② Motor/Brake connector

<with brake>

Key way dimensions [Unit: mm]
<Key way, center tap shaft>

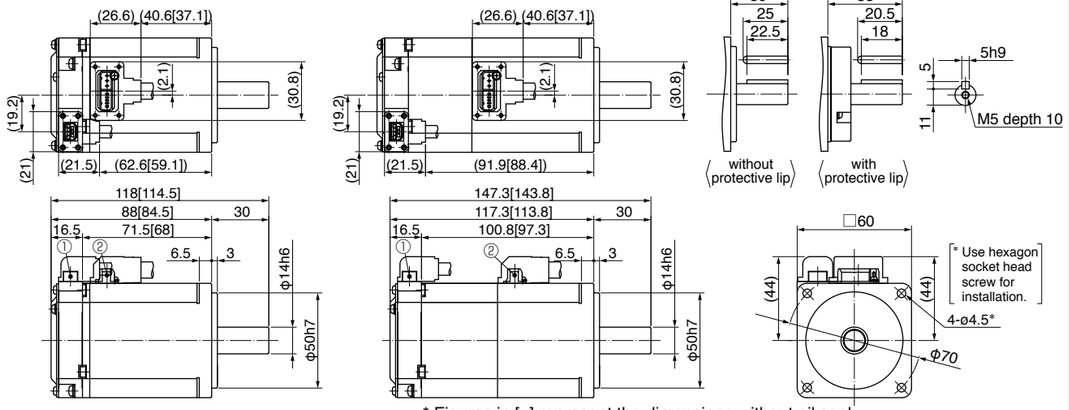

* Figures in [ ] represent the dimensions without oil seal.

■ with protective lip/ with oil seal
<without brake>

<with brake>

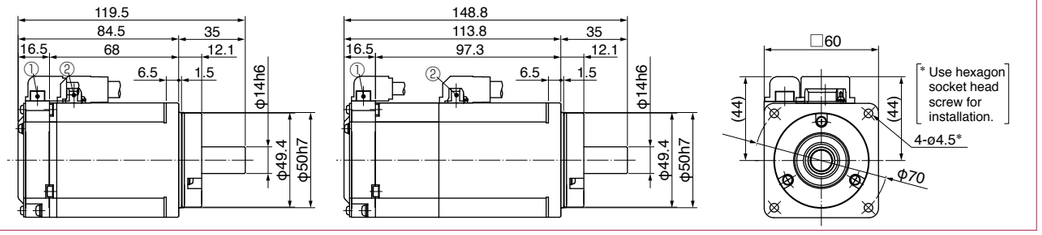

* For motors specifications, refer to P.77 to P.80.

MHMF 750 W, 1000 W
Connector type (IP67)

● MHMF082L1□□

■ without protective lip/ with oil seal

① Encoder connector
② Motor/Brake connector

Key way dimensions [Unit: mm]
<Key way, center tap shaft>

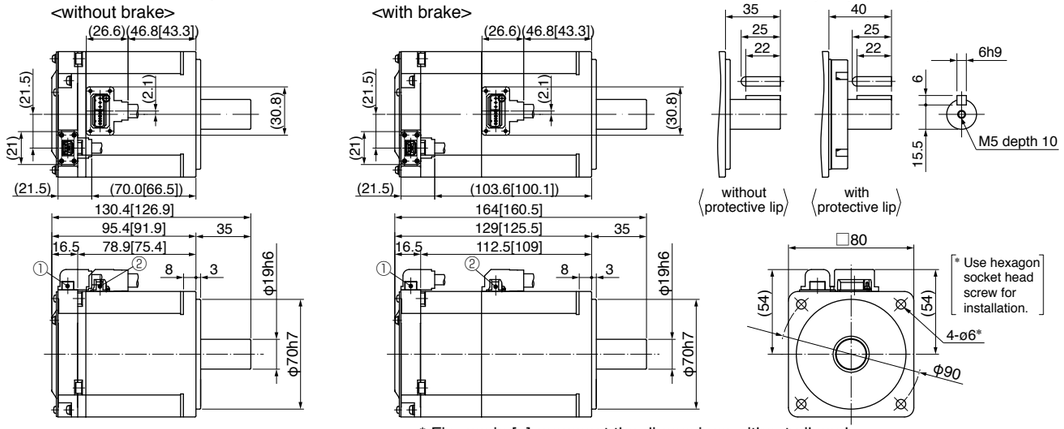

* Figures in [ ] represent the dimensions without oil seal.

■ with protective lip/ with oil seal

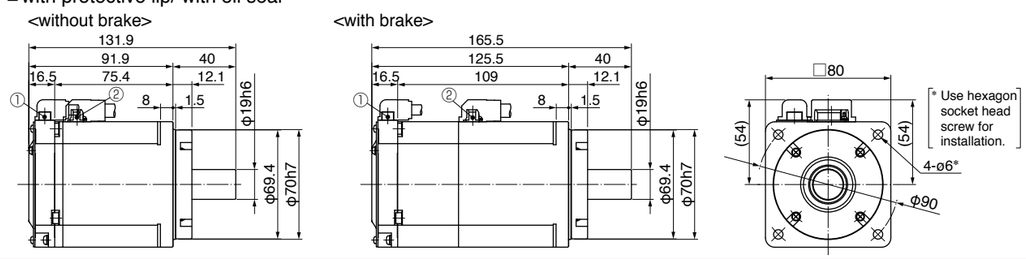

● MHMF092L1□□

■ without protective lip/ with oil seal

① Encoder connector
② Motor/Brake connector

Key way dimensions [Unit: mm]
<Key way, center tap shaft>

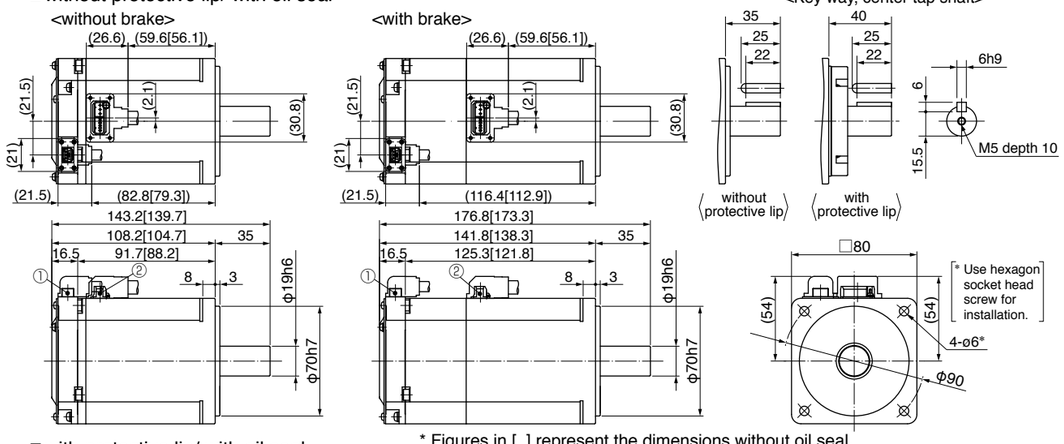

* Figures in [ ] represent the dimensions without oil seal.

■ with protective lip/ with oil seal

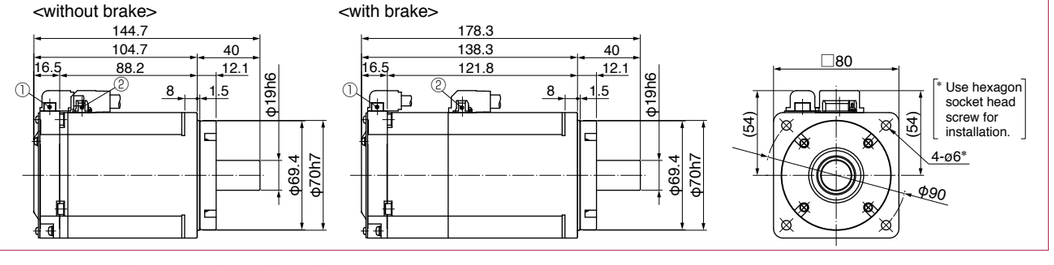

* For motors specifications, refer to P.81, P.82.

MHMF 1.0 kW to 5.0 kW
Small size connector (JN2)

● MHMF102L1□□

[Unit: mm]

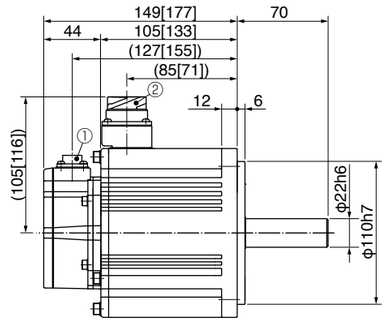

① Encoder connector
② Motor/Brake connector

● Figures in [ ] represent the dimensions with brake.

● MHMF302L1□□

[Unit: mm]

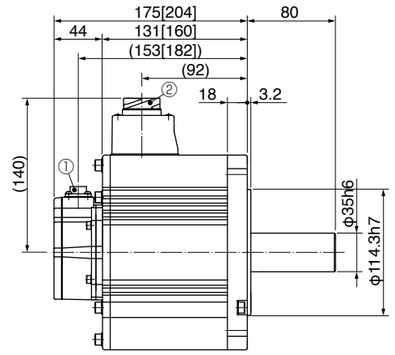

① Encoder connector
② Motor/Brake connector

● Figures in [ ] represent the dimensions with brake.

● MHMF152L1□□

[Unit: mm]

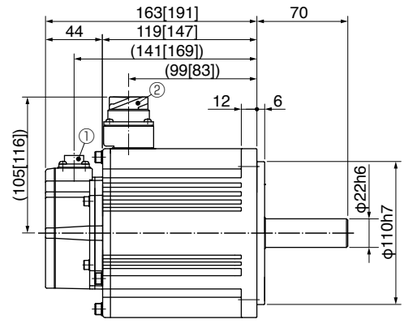

① Encoder connector
② Motor/Brake connector

● Figures in [ ] represent the dimensions with brake.

● MHMF402L1□□

[Unit: mm]

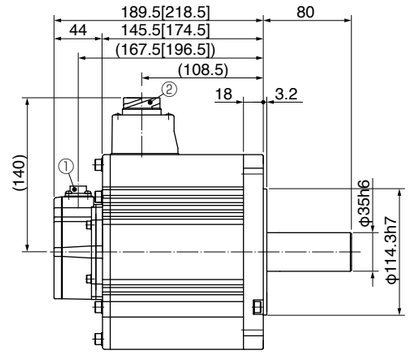

① Encoder connector
② Motor/Brake connector

● Figures in [ ] represent the dimensions with brake.

● MHMF202L1□□

[Unit: mm]

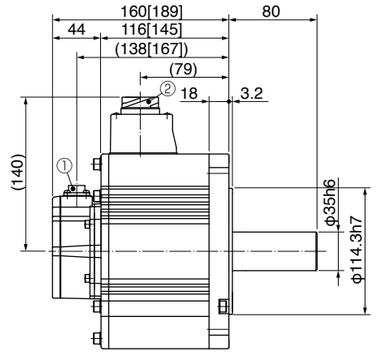

① Encoder connector
② Motor/Brake connector

● Figures in [ ] represent the dimensions with brake.

● MHMF502L1□□

[Unit: mm]

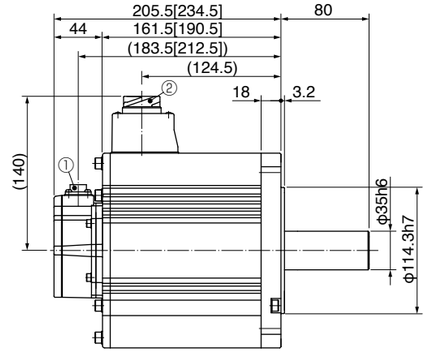

① Encoder connector
② Motor/Brake connector

● Figures in [ ] represent the dimensions with brake.

* For motor specifications and mounting dimensions (on flange face), refer to P.83 to P.88.

MDMF 1.0 kW to 5.0 kW
Small size connector (JN2)

● **MDMF102L1□□** [Unit: mm]

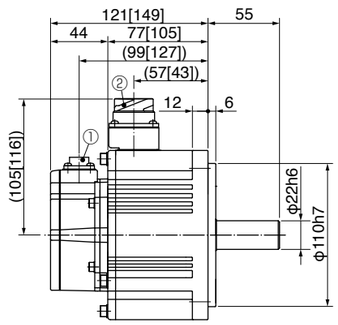

① Encoder connector
② Motor/Brake connector

● Figures in [ ] represent the dimensions with brake.

● **MDMF302L1□□** [Unit: mm]

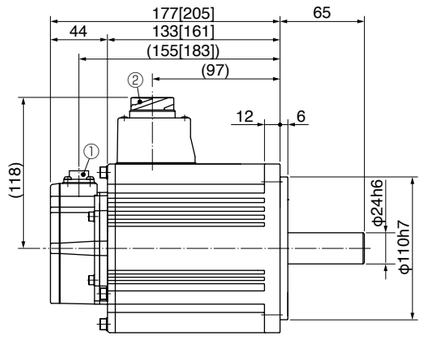

① Encoder connector
② Motor/Brake connector

● Figures in [ ] represent the dimensions with brake.

● **MDMF152L1□□** [Unit: mm]

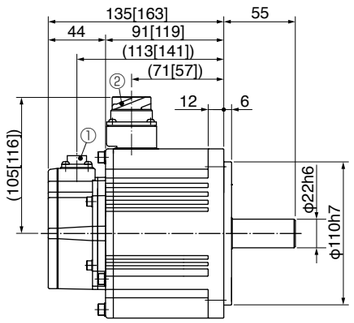

① Encoder connector
② Motor/Brake connector

● Figures in [ ] represent the dimensions with brake.

● **MDMF402L1□□** [Unit: mm]

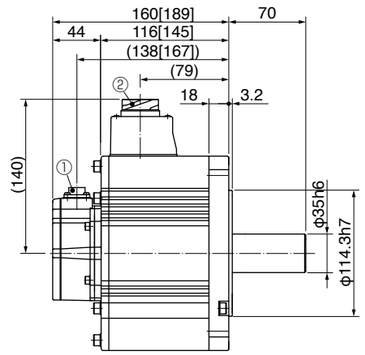

① Encoder connector
② Motor/Brake connector

● Figures in [ ] represent the dimensions with brake.

● **MDMF202L1□□** [Unit: mm]

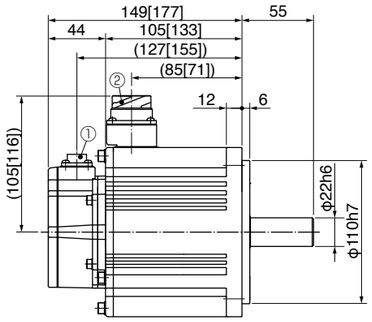

① Encoder connector
② Motor/Brake connector

● Figures in [ ] represent the dimensions with brake.

● **MDMF502L1□□** [Unit: mm]

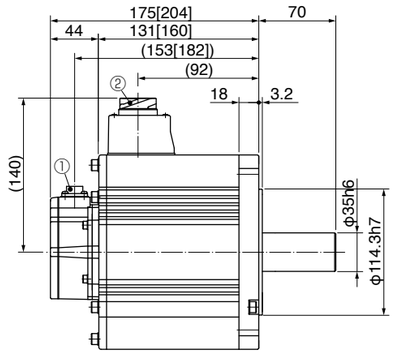

① Encoder connector
② Motor/Brake connector

● Figures in [ ] represent the dimensions with brake.

* For motor specifications and mounting dimensions (on flange face), refer to P.89 to P.94.

MGMF 0.85 kW to 4.4 kW
Small size connector (JN2)

● **MGMF092L1□□** [Unit: mm]

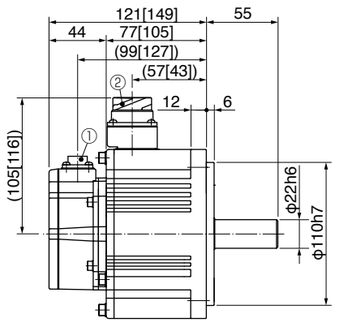

① Encoder connector
② Motor/Brake connector

● Figures in [ ] represent the dimensions with brake.

● **MGMF292L1□□** [Unit: mm]

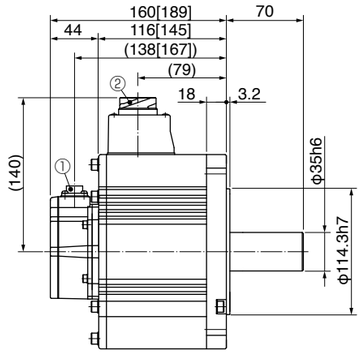

① Encoder connector
② Motor/Brake connector

● Figures in [ ] represent the dimensions with brake.

● **MGMF132L1□□** [Unit: mm]

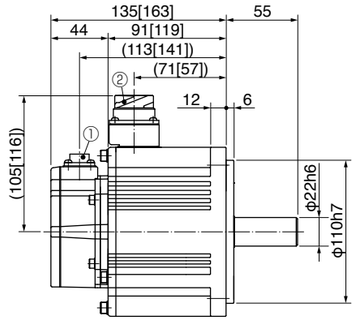

① Encoder connector
② Motor/Brake connector

● Figures in [ ] represent the dimensions with brake.

● **MGMF442L1□□** [Unit: mm]

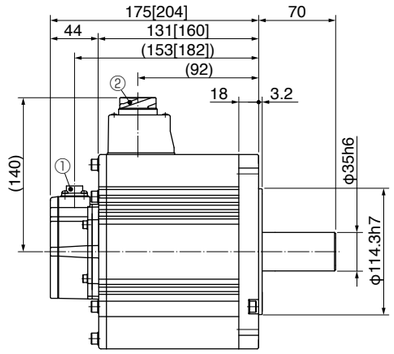

① Encoder connector
② Motor/Brake connector

● Figures in [ ] represent the dimensions with brake.

● **MGMF182L1□□** [Unit: mm]

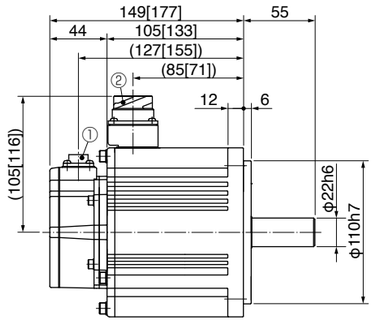

① Encoder connector
② Motor/Brake connector

● Figures in [ ] represent the dimensions with brake.

* For motor specifications and mounting dimensions (on flange face), refer P.95 to P.99.

Features/ Lineup

Features

- Line-up IP67 motor: 1.0 kW to 5.0 kW
- Max speed: 6500r/min (MHMF 50 W to 400 W)
- Low inertia (MSMF) to High inertia (MHMF).
- Low cogging torque: Rated torque ratio 0.5 % (typical value).
- 23-bit absolute encoder (8388608 pulse).

Motor Lineup

80 mm sq. or less

MSMF
Low inertia

Max. speed : 6000 r/min
Rated speed : 3000 r/min
Rated output :
50 W to 1000 W
Enclosure:
IP65: Leadwire type

MQMF
(Flat type)
Middle inertia

Max. speed : 6500 r/min
Rated speed : 3000 r/min
Rated output :
100 W to 400 W
Enclosure:
IP65: Leadwire type

MHMF
High inertia

Max. speed :
6500 r/min
6000 r/min (750 W,1000 W)
Rated speed : 3000 r/min
Rated output :
50 W to 1000 W
Enclosure:
IP65: Leadwire type

100 mm sq. or more

MSMF
Low inertia

Max. speed : 5000 r/min
4500 r/min (4.0 kW,5.0 kW)
Rated speed : 3000 r/min
Rated output : 1.0 kW to 5.0 kW
Enclosure : IP67

MDMF
Middle inertia

Max. speed : 3000 r/min
Rated speed : 2000 r/min
Rated output : 1.0 kW to 5.0 kW
Enclosure : IP67

MGMF
(Low speed/ High torque type)
Middle inertia

Max. speed : 3000 r/min
Rated speed : 1500 r/min
Rated output : 0.85 kW to 4.4 kW
Enclosure : IP67

MHMF
High inertia

Max. speed : 3000 r/min
Rated speed : 2000 r/min
Rated output : 1.0 kW to 5.0 kW
Enclosure : IP67

<Cautions> Please avoid the motor, or equipment containing the motor to be distributed to Japan, or other regions through Japan.

Special Order Product Motor Contents

Model Designation

* For combination of elements of model number, refer to Index P.272.

Servo Motor

M	S	M	F	5	A	2	L	1	A	1	*
①			②	③		④	⑤	⑥	⑦		

* — Special specifications

① Type

Symbol	Type
MSM	Low inertia (50 W to 5.0 kW)
MQM	Middle inertia (100 W to 400 W)
MDM	Middle inertia (1.0 kW to 5.0 kW)
MGM	Middle inertia (0.85 kW to 4.4 kW)
MHM	High inertia (50 W to 5.0 kW)

② Series

Symbol	Series name
F	A6 series

③ Motor rated output

Symbol	Rated output		Symbol	Rated output
5A	50 W		15	1.5 kW
01	100 W		18	1.8 kW
02	200 W		20	2.0 kW
04	400 W		29	2.9 kW
08	750 W		30	3.0 kW
09	0.85 kW, (130 mm sq.)	1000 W (80 mm sq.)	40	4.0 kW
			44	4.4 kW
10	1.0 kW		50	5.0 kW
13	1.3 kW			

④ Voltage specifications

Symbol	Specifications
2	200 V
Z	100 V/200 V common (50 W only)

⑤ Rotary encoder specifications

Symbol	Format	Pulse counts	Resolution	Wires
L	Absolute	23-bit	8388608	7

<Note>
When using a rotary encoder as an incremental system (not using multi-turn data), do not connect a battery for absolute encoder.

⑥ Design order

Symbol	Specifications
1	Standard

⑦ Motor specifications: 80 mm sq. or less Leadwire type IP65 MSMF 50 W to 1000 W

Symbol		Shaft		Holding brake		Oil seal	
		Round	Key-way, center tap	without	with	without	with
A	2	●		●		●	
B	2	●			●	●	
C	2	●		●			●
D	2	●			●		●
S	2		●	●		●	
T	2		●		●	●	
U	2		●	●			●
V	2		●		●		●

⑦ Motor specifications: 80 mm sq. or less Leadwire type IP65 MHMF 50 W to 1000 W, MQMF 100 W to 400 W

Symbol		Shaft		Holding brake		Oil seal		
		Round	Key-way, center tap	without	with	without	with	With protective lip
A	2	●		●		●		
B	2	●			●	●		
C	2	●		●			●	
C	4	●		●				●
D	2	●			●		●	
D	4	●			●			●
S	2		●	●		●		
T	2		●		●	●		
U	2		●	●			●	
U	4		●	●				●
V	2		●		●		●	
V	4		●		●			●

⑦ Motor specifications: 100 mm sq. or more Encoder connector : JL10 IP67 MSMF, MHMF, MDMF, MGMF

Symbol		Shaft		Holding brake		Oil seal	
		Round	Key-way	without	with	with	With protective lip
C	6	●		●		●	
C	8	●		●			●
D	6	●			●	●	
D	8	●			●		●
G	6		●	●		●	
G	8		●	●			●
H	6		●		●	●	
H	8		●		●		●

* Encoder connector JL10: Also applicable to screwed type

Servo Driver

M	A	D	L	N	1	5	S	E	*	*	*
①			②	③	④	⑤	⑥	⑦			

* — Special specifications

① Frame symbol

Symbol	Frame	Symbol	Frame
MAD	A-Frame	MDD	D-Frame
MBD	B-Frame	MED	E-Frame
MCD	C-Frame	MFD	F-Frame

② Series

Symbol	Series name
L	A6 series

③ Safety Function

Symbol	Specifications
N	without the safety function
T	with the safety function

④ Max. current rating

Symbol	Current rating	Symbol	Current rating
0	6 A	5	40 A
1	8 A	8	60 A
2	12 A	A	100 A
3	22 A	B	120 A
4	24 A		

⑤ Supply voltage specifications

Symbol	Specifications
3	3-phase 200 V
5	Single/3-phase 200 V

⑥ I/f specifications

Symbol (specification)
S (Analog/Pulse)
N (RTEX)
B (EtherCAT)

⑦ Classification of type

Symbol	Specification
E	Basic type (Pulse train only)
F	Multi fanction type (Pulse, analog, full-closed)
G	RS485 communication type (Pulse train only)
E	without the safety function
F	with the safety function
(Scheduled to release in 2016)	

Table of Part Numbers and Options: 80 mm sq. or less 50 W to 1000 W

Motor						Driver				Optional parts								
Motor series		Power supply	Output (W)	Part No. Note)1	Rating/ Spec. Dimensions (page)	A6 SF series Multi fanction type (Pulse, analog, full-closed)	A6 SG series RS485 communication / A6 SE series Basic (Pulse signal input) Note)2, Note)4	Frame	Power capacity (at rated load) (kVA)	Encoder Cable Note)3 23-bit Absolute: Use in the absolute system (with battery box) Note)5	Encoder Cable Note)3 23-bit Absolute: Use in the Incremental system (without battery box)		Motor Cable Note)3: without Brake	Motor Cable Note)3: with Brake	Brake Cable Note)3	External Regenerative Resistor	Reactor (Single phase / 3-phase)	Noise Filter (Single phase / 3-phase)
Low inertia	MSMF (Leadwire type) 3000 r/min IP65	Single phase/ 3-phase 200 V	50	MSMF5AZL1 □ 2M	121	MADLT05SF	MADLN05S◇	A-frame	Approx. 0.5	MFECA 0＊＊0EAE (For fixed)	MFECA 0＊＊0EAD (For fixed)		MFMCA 0＊＊0EED		MFMCB 0＊＊0GET	DV0P4281	DV0P227 / DV0P220	DV0P4170 / DV0PM20042
			100	MSMF012L1 □ 2M	122	MADLT05SF	MADLN05S◇											
			200	MSMF022L1 □ 2M	123	MADLT15SF	MADLN15S◇									DV0P4283		
			400	MSMF042L1 □ 2M	124	MBDLT25SF	MBDLN25S◇	B-frame	Approx. 0.9								DV0P228 / DV0P220	
			750	MSMF082L1 □ 2M	125	MCDLT35SF	MCDLN35S◇	C-frame	Approx. 1.3									DV0PM20042
			1000	MSMF092L1 □ 2M	126	MDDLT45SF	MDDLN45S◇	D-frame	Approx. 1.8							DV0P4284	DV0P228 / DV0P222	DV0P4220
Middle inertia Flat type	MQMF (Leadwire type) 3000 r/min IP65	Single phase/ 3-phase 200 V	100	MQMF012L1 □ 2M MQMF012L1 □ 4M	133	MADLT05SF	MADLN05S◇	A-frame	Approx. 0.5	MFECA 0＊＊0EAE (For fixed)	MFECA 0＊＊0EAD (For fixed)		MFMCA 0＊＊0EED		MFMCB 0＊＊0GET	DV0P4281	DV0P227 / DV0P220	DV0P4170 / DV0PM20042
			200	MQMF022L1 □ 2M MQMF022L1 □ 4M	134	MADLT15SF	MADLN15S◇									DV0P4283		
			400	MQMF042L1 □ 2M MQMF042L1 □ 4M	135	MBDLT25SF	MBDLN25S◇	B-frame	Approx. 0.9								DV0P228 / DV0P220	
High inertia	MHMF (Leadwire type) 3000 r/min IP65	Single phase/ 3-phase 200 V	50	MHMF5AZL1 □ 2M MHMF5AZL1 □ 4M	136	MADLT05SF	MADLN05S◇	A-frame	Approx. 0.5	MFECA 0＊＊0EAE (For fixed)	MFECA 0＊＊0EAD (For fixed)		MFMCA 0＊＊0EED		MFMCB 0＊＊0GET	DV0P4281	DV0P227 / DV0P220	DV0P4170 / DV0PM20042
			100	MHMF012L1 □ 2M MHMF012L1 □ 4M	137	MADLT05SF	MADLN05S◇											
			200	MHMF022L1 □ 2M MHMF022L1 □ 4M	138	MADLT15SF	MADLN15S◇									DV0P4283		
			400	MHMF042L1 □ 2M MHMF042L1 □ 4M	139	MBDLT25SF	MBDLN25S◇	B-frame	Approx. 0.9								DV0P228 / DV0P220	
			750	MHMF082L1 □ 2M MHMF082L1 □ 4M	140	MCDLT35SF	MCDLN35S◇	C-frame	Approx. 1.3									DV0PM20042
			1000	MHMF092L1 □ 2M MHMF092L1 □ 4M	141	MDDLT55SF	MDDLN55S◇	D-frame	Approx. 2.3							DV0P4284	DV0P228 / DV0P222	DV0P4220

Note)1 □ : Represents the motor specifications. (refer to “Model designation” P.116.)
Note)2 ◇ : Represents the driver specifications. (refer to “Model designation” P.116.)
Note)3 ＊＊ : Represents the cable length (03/3 m, 05/5 m, 10/10 m, 20/20 m). Example. 3 m/MFECA0030EAE
Note)4 Because A6SE series driver (dedicated for position control) does not support the absolute system specification, only incremental system can be used in combination.
Note)5 Please note that a battery is not supplied together with 23-bit absolute encoder cable (with battery box). Please buy the battery part number “DV0P2990” separately.

■ Options

Title			Part No.	Page
Interface Cable			DV0P4360	182
Interface Conversion Cable			DV0P4120	182
			DV0P4121	182
			DV0P4130	182
			DV0P4131	182
			DV0P4132	182
Connector Kit for Power Supply Input Connection	A-frame to D-frame	Single row type	DV0PM20032	185
		Double row type	DV0PM20033	185
Connector Kit for Motor Connection	A-frame to D-frame		DV0PM20034	186
Connector Kit for Motor/Encoder Connection			DV0P4290	186
Connector Kit	RS485, RS232		DV0PM20024	183
	Safety		DV0PM20025	183
	Interface		DV0P4350	184
	External Scale		DV0PM20026	184
	Encoder		DV0PM20010	184
Battery for Absolute Encoder			DV0P2990	194
Battery Box for Absolute Encoder Note)5			DV0P4430	194
Mounting Bracket	For A-frame, B-frame		DV0PM20100	195
	For C-frame, D-frame		DV0PM20101	195
Encoder Cable	with Battery Box Note)5		MFECA0＊＊0EAE	171
	without Battery Box		MFECA0＊＊0EAD	171
Motor Cable	without Brake		MFMCA0＊＊0EED	175
Brake Cable			MFMCB0＊＊0GET	181
External regenerative resistor	50 Ω 25 W		DV0P4280	197
	100 Ω 25 W		DV0P4281	197
	25 Ω 50 W		DV0P4282	197
	50 Ω 50 W		DV0P4283	197
	30 Ω 100 W		DV0P4284	197
Reactor			DV0P220	196
			DV0P222	196
			DV0P227	196
			DV0P228	196
Noise Filter			DV0P4170	236
			DV0PM20042	236
			DV0P4220	236
Surge Absorber			DV0P4190	237
			DV0P1450	237
Ferite Core			DV0P1460	238

Table of Part Numbers and Options: 100 mm sq. or more 0.85 kW to 5.0 kW

Motor						Driver				Optional parts							
Motor series		Power supply	Output (W)	Part No. Note)1	Rating/ Spec. Dimensions (page)	A6 SF series Multi fanction type (Pulse, analog, full-closed)	A6 SG series RS485 communication / A6 SE series Basic (Pulse signal input) Note)2, Note)4	Frame	Power capacity (at rated load) (kVA)	Encoder Cable Note)3,5 JL10 (Large size) (One-touch lock type / N/MS screwed type) 23-bit Absolute: Use in the absolute system (with battery box) Note)7	Encoder Cable Note)3,5 JL10 (One-touch lock type / JL04 screwed type) 23-bit Absolute: Use in the Incremental system (without battery box)		Motor Cable Note)3,5 JL10 (One-touch lock type / JL04 screwed type): without Brake	Motor Cable Note)3,5 JL10 (One-touch lock type / JL04 screwed type): with Brake	External Regenerative Resistor	Reactor (Single phase / 3-phase)	Noise Filter
Low inertia	MSMF Large size JL10 type 3000 r/min IP67	Single phase/ 3-phase 200 V	1000	MSMF102L1 □ 6M MSMF102L1 □ 8M	127	MDDLT55SF	MDDLN55S◇	D-frame	Approx. 2.3	MFECA 0＊＊0EPE / MFECA 0＊＊0ESE	MFECA 0＊＊0EPD / MFECA 0＊＊0ESD		MFMCD 0＊＊2EUD / MFMCD 0＊＊2ECD	MFMCA 0＊＊2FUD / MFMCA 0＊＊2FCD	DV0P4284	DV0P228 / DV0P222	DV0P4220
			1500	MSMF152L1 □ 6M MSMF152L1 □ 8M	128	MDDLT55SF	MDDLN55S◇									DV0PM20047 / DV0P222	
		3-phase 200 V	2000	MSMF202L1 □ 6M MSMF202L1 □ 8M	129	MEDLT83SF	MEDLN83S◇	E-frame	Approx. 3.8						DV0P4285 Note)6	DV0P223	DV0PM20043
			3000	MSMF302L1 □ 6M MSMF302L1 □ 8M	130	MFDLTA3SF	MFDLNA3S◇	F-frame	Approx. 4.5				MFMCA 0＊＊3EUT / MFMCA 0＊＊3ECT	MFMCA 0＊＊3FUT / MFMCA 0＊＊3FCT	DV0P4285 ×2 in parallel	DV0P224	DV0P3410
			4000	MSMF402L1 □ 6M MSMF402L1 □ 8M	131	MFDLTB3SF	MFDLNB3S◇		Approx. 7.5							DV0P225	
			5000	MSMF502L1 □ 6M MSMF502L1 □ 8M	132	MFDLTB3SF	MFDLNB3S◇										
Middle inertia	MDMF Large size JL10 type 2000 r/min IP67	Single phase/ 3-phase 200 V	1000	MDMF102L1 □ 6M MDMF102L1 □ 8M	148	MDDLT45SF	MDDLN45S◇	D-frame	Approx. 1.8	MFECA 0＊＊0EPE / MFECA 0＊＊0ESE	MFECA 0＊＊0EPD / MFECA 0＊＊0ESD		MFMCD 0＊＊2EUD / MFMCD 0＊＊2ECD	MFMCA 0＊＊2FUD / MFMCA 0＊＊2FCD	DV0P4284	DV0P228 / DV0P222	DV0P4220
			1500	MDMF152L1 □ 6M MDMF152L1 □ 8M	149	MDDLT55SF	MDDLN55S◇		Approx. 2.3							DV0PM20047 / DV0P222	
		3-phase 200 V	2000	MDMF202L1 □ 6M MDMF202L1 □ 8M	150	MEDLT83SF	MEDLN83S◇	E-frame	Approx. 3.8						DV0P4285 Note)6	DV0P223	DV0PM20043
			3000	MDMF302L1 □ 6M MDMF302L1 □ 8M	151	MFDLTA3SF	MFDLNA3S◇	F-frame	Approx. 4.5				MFMCA 0＊＊3EUT / MFMCA 0＊＊3ECT	MFMCA 0＊＊3FUT / MFMCA 0＊＊3FCT	DV0P4285 ×2 in parallel	DV0P224	DV0P3410
			4000	MDMF402L1 □ 6M MDMF402L1 □ 8M	152	MFDLTB3SF	MFDLNB3S◇		Approx. 7.5							DV0P225	
			5000	MDMF502L1 □ 6M MDMF502L1 □ 8M	153	MFDLTB3SF	MFDLNB3S◇										
	MGMF Large size JL10 type (Low speed/ High torque type) 1500 r/min IP67	Single phase/ 3-phase 200 V	850	MGMF092L1 □ 6M MGMF092L1 □ 8M	154	MDDLT45SF	MDDLN45S◇	D-frame	Approx. 1.8	MFECA 0＊＊0EPE / MFECA 0＊＊0ESE	MFECA 0＊＊0EPD / MFECA 0＊＊0ESD		MFMCD 0＊＊2EUD / MFMCD 0＊＊2ECD	MFMCA 0＊＊2FUD / MFMCA 0＊＊2FCD	DV0P4284	DV0P228 / DV0P221	DV0P4220
			1300	MGMF132L1 □ 6M MGMF132L1 □ 8M	155	MDDLT55SF	MDDLN55S◇		Approx. 2.3							DV0PM20047 / DV0P222	
		3-phase 200 V	1800	MGMF182L1 □ 6M MGMF182L1 □ 8M	156	MEDLT83SF	MEDLN83S◇	E-frame	Approx. 3.8						DV0P4285	DV0P223	DV0PM20043
			2900	MGMF292L1 □ 6M MGMF292L1 □ 8M	157	MFDLTB3SF	MFDLNB3S◇	F-frame	Approx. 7.5				MFMCA 0＊＊3EUT / MFMCA 0＊＊3ECT	MFMCA 0＊＊3FUT / MFMCA 0＊＊3FCT	DV0P4285 ×2 in parallel	DV0P224	DV0P3410
			4400	MGMF442L1 □ 6M MGMF442L1 □ 8M	158	MFDLTB3SF	MFDLNB3S◇									DV0P225	
High inertia	MHMF Large size JL10 type 2000 r/min IP67	Single phase/ 3-phase 200 V	1000	MHMF102L1 □ 6M MHMF102L1 □ 8M	142	MDDLT45SF	MDDLN45S◇	D-frame	Approx. 1.8	MFECA 0＊＊0EPE / MFECA 0＊＊0ESE	MFECA 0＊＊0EPD / MFECA 0＊＊0ESD		MFMCD 0＊＊2EUD / MFMCD 0＊＊2ECD	MFMCA 0＊＊2FUD / MFMCA 0＊＊2FCD	DV0P4284	DV0P228 / DV0P222	DV0P4220
			1500	MHMF152L1 □ 6M MHMF152L1 □ 8M	143	MDDLT55SF	MDDLN55S◇		Approx. 2.3							DV0PM20047 / DV0P222	
		3-phase 200 V	2000	MHMF202L1 □ 6M MHMF202L1 □ 8M	144	MEDLT83SF	MEDLN83S◇	E-frame	Approx. 3.8				MFMCE 0＊＊2EUD / MFMCE 0＊＊2ECD	MFMCE 0＊＊2FUD / MFMCE 0＊＊2FCD	DV0P4285 Note)6	DV0P223	DV0PM20043
			3000	MHMF302L1 □ 6M MHMF302L1 □ 8M	145	MFDLTA3SF	MFDLNA3S◇	F-frame	Approx. 4.5				MFMCA 0＊＊3EUT / MFMCA 0＊＊3ECT	MFMCA 0＊＊3FUT / MFMCA 0＊＊3FCT	DV0P4285 ×2 in parallel	DV0P224	DV0P3410
			4000	MHMF402L1 □ 6M MHMF402L1 □ 8M	146	MFDLTB3SF	MFDLNB3S◇		Approx. 7.5							DV0P225	
			5000	MHMF502L1 □ 6M MHMF502L1 □ 8M	147	MFDLTB3SF	MFDLNB3S◇										

Note)1 □ : Represents the motor specifications. (refer to "Model designation" P.116.)
Note)2 ◇ : Represents the driver specifications. (refer to "Model designation" P.116.)
Note)3 ＊＊ : Represents the cable length (03/3 m, 05/5 m, 10/10 m, 20/20 m). Example. 3 m/MFECA0030EPE
Note)4 Because A6SE series driver (dedicated for position control) does not support the absolute system specification, only incremental system can be used in combination.
Note)5 Use of JL10 type encoder cables and motor cables enable one-touch lock connections. Conventional screwed type N/MS and JL04V type cables can also be used.
Note)6 For other possible combinations, refer to P.197.
Note)7 Please note that a battery is not supplied together with 23-bit absolute encoder cable (with battery box). Please buy the battery part number "DV0P2990" separately.

■ Options

Title			Part No.	Page
Interface Cable			DV0P4360	182
Interface Conversion Cable			DV0P4120	182
			DV0P4121	182
			DV0P4130	182
			DV0P4131	182
			DV0P4132	182
Connector Kit for Power Supply Input Connection	A-frame to D-frame	Single row type	DV0PM20032	185
		Double row type	DV0PM20033	185
	E-frame		DV0PM20044	185
Connector Kit for Motor Connection	A-frame to D-frame		DV0PM20034	186
	E-frame		DV0PM20046	186
Connector Kit for Regenera-tive Resistor	E-frame		DV0PM20045	185
Connector Kit for Motor/ Encoder Con-nection	without Brake		DV0PM24587 MSMF 1.0 kW to 2.0 kW MDMF 1.0 kW to 2.0 kW MGMF 0.85 kW to 1.8 kW MHMF 1.0 kW, 1.5 kW	189
			DV0PM24588 MSMF 3.0 kW to 5.0 kW MDMF 3.0 kW to 5.0 kW MGMF 2.9 kW, 4.4 kW MHMF 2.0 kW to 5.0 kW	190
	with Brake		DV0PM24589 MSMF 1.0 kW to 2.0 kW MDMF 1.0 kW to 2.0 kW MGMF 0.85 kW to 1.8 kW MHMF 1.0 kW, 1.5 kW	189
			DV0PM24590 MSMF 3.0 kW to 5.0 kW MDMF 3.0 kW to 5.0 kW MGMF 2.9 kW, 4.4 kW MHMF 2.0 kW to 5.0 kW	190
Connector Kit	RS485, RS232		DV0PM20024	183
	Safety		DV0PM20025	183
	Interface		DV0P4350	184
	External Scale		DV0PM20026	184
	Encoder		DV0PM20010	184
Battery for Absolute Encoder			DV0P2990	194
Battery Box for Absolute Encoder Note)7			DV0P4430	194
Mounting Bracket	D-frame		DV0PM20101	195
Encoder Cable (with Battery Box Note)7)	One-touch lock type		MFECA0＊＊0EPE	173
	Screwed type		MFECA0＊＊0ESE	174
Encoder Cable (without Battery Box)	One-touch lock type		MFECA0＊＊0EPD	173
	Screwed type		MFECA0＊＊0ESD	173
Motor Cable (without Brake)	One-touch lock type		MFMCD0＊＊2EUD	176
	Screwed type		MFMCD0＊＊2ECD	176
	One-touch lock type		MFMCE0＊＊2EUD	177
	Screwed type		MFMCE0＊＊2ECD	177
	One-touch lock type		MFMCA0＊＊3EUT	177
	Screwed type		MFMCA0＊＊3ECT	177
Motor Cable (with Brake)	One-touch lock type		MFMCA0＊＊2FUD	179
	Screwed type		MFMCA0＊＊2FCD	179
	One-touch lock type		MFMCE0＊＊2FUD	180
	Screwed type		MFMCE0＊＊2FCD	180
	One-touch lock type		MFMCA0＊＊3FUT	180
	Screwed type		MFMCA0＊＊3FCT	180
External regenerative resistor	30 Ω 100 W 20 Ω 130 W		DV0P4284 DV0P4285	197
Reactor			DV0P222, DV0P223 DV0P224, DV0P225 DV0P228, DV0PM20047	196
Noise Filter			DV0P4220, DV0PM20043 DV0P3410	236
Surge Absorber			DV0P4190, DV0P1450	237
Ferite Core			DV0P1460	238

Special Order Product

200 V MSMF 50 W [Low inertia 38 mm sq.]

• Please contact us for more information.

Specifications

			AC200 V
Motor model *1	IP65		MSMF5AZL1□□M
Applicable driver	Model No.	Multifunction type	MADLT05SF
		RS485 communication type *2	MADLN05SG
		Basic type *2	MADLN05SE
	Frame symbol		A-frame
Power supply capacity		(kVA)	0.5
Rated output		(W)	50
Rated torque		(N·m)	0.16
Continuous stall torque		(N·m)	0.16
Momentary Max. peak torque		(N·m)	0.48
Rated current		(A(rms))	1.1
Max. current		(A(o-p))	4.7
Regenerative brake frequency (times/min) Note)1	Without option		No limit Note)2
	DV0P4281		No limit Note)2
Rated rotational speed		(r/min)	3000
Max. rotational speed		(r/min)	6000
Moment of inertia of rotor ($\times 10^{-4}$ kg·m^2)	Without brake		0.026
	With brake		0.029
Recommended moment of inertia ratio of the load and the rotor Note)3			30 times or less
Rotary encoder specifications *3			23-bit Absolute
	Resolution per single turn		8388608

• **Brake specifications** (For details, refer to P.167)

(This brake will be released when it is energized. Do not use this for braking the motor in motion.)

Static friction torque (N·m)	0.294 or more
Engaging time (ms)	35 or less
Releasing time (ms) Note)4	20 or less
Exciting current (DC) (A)	0.30
Releasing voltage (DC) (V)	1 or more
Exciting voltage (DC) (V)	24±1.2

• **Permissible load** (For details, refer to P.166)

During assembly	Radial load P-direction (N)	147
	Thrust load A-direction (N)	88.0
	Thrust load B-direction (N)	117.6
During operation	Radial load P-direction (N)	68.6
	Thrust load A, B-direction (N)	58.8

• For details of Note)1 to Note)4, refer to P.165.
• Dimensions of Driver, refer to P.47.
*1 □□ in the motor part number represents the motor specifications.
*2 Basic type and RS485 communication type are "Position control type".
Detail of model designation, refer to P.116.
*3 When using a rotary encoder as an incremental system (not using multi-turn data), do not connect a battery for absolute encoder.

Torque characteristics (at AC200 V of power voltage <Dotted line represents the torque at 10 % less supply voltage.>)

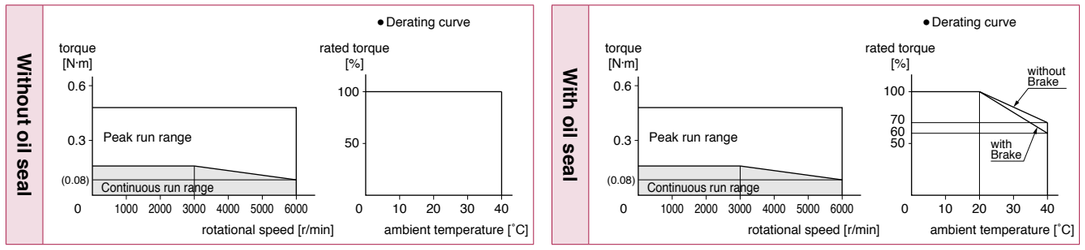

Dimensions

Mass: Without brake: 0.32 kg
With brake: 0.53 kg

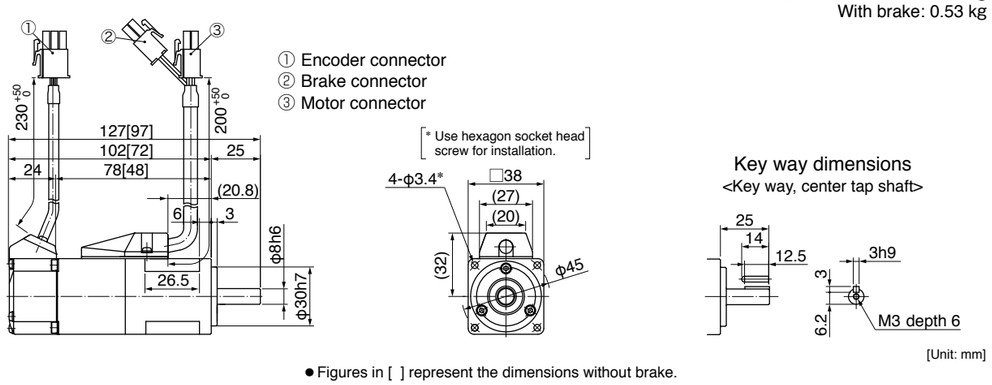

• Figures in [ ] represent the dimensions without brake.

<Cautions> Reduce the moment of inertia ratio if high speed response operation is required.
Dimensions are subject to change without notice. Contact us or a dealer for the latest information.
Read the Instruction Manual carefully and understand all precautions and remarks before using the products.
Please avoid the motor, or equipment containing the motor to be distributed to Japan, or other regions through Japan.

Special Order Product

200 V MSMF 100 W [Low inertia 38 mm sq.]

• Please contact us for more information.

Specifications

			AC200 V
Motor model *1	IP65		MSMF012L1□□M
Applicable driver	Model No.	Multifunction type	MADLT05SF
		RS485 communication type *2	MADLN05SG
		Basic type *2	MADLN05SE
	Frame symbol		A-frame
Power supply capacity		(kVA)	0.5
Rated output		(W)	100
Rated torque		(N·m)	0.32
Continuous stall torque		(N·m)	0.32
Momentary Max. peak torque		(N·m)	0.95
Rated current		(A(rms))	1.1
Max. current		(A(o-p))	4.7
Regenerative brake frequency (times/min) Note)1	Without option		No limit Note)2
	DV0P4281		No limit Note)2
Rated rotational speed		(r/min)	3000
Max. rotational speed		(r/min)	6000
Moment of inertia of rotor ($\times 10^{-4}$ kg·m^2)	Without brake		0.048
	With brake		0.051
Recommended moment of inertia ratio of the load and the rotor Note)3			30 times or less
Rotary encoder specifications *3			23-bit Absolute
	Resolution per single turn		8388608

• **Brake specifications** (For details, refer to P.167)

(This brake will be released when it is energized. Do not use this for braking the motor in motion.)

Static friction torque (N·m)	0.294 or more
Engaging time (ms)	35 or less
Releasing time (ms) Note)4	20 or less
Exciting current (DC) (A)	0.30
Releasing voltage (DC) (V)	1 or more
Exciting voltage (DC) (V)	24±1.2

• **Permissible load** (For details, refer to P.166)

During assembly	Radial load P-direction (N)	147
	Thrust load A-direction (N)	88.0
	Thrust load B-direction (N)	117.6
During operation	Radial load P-direction (N)	68.6
	Thrust load A, B-direction (N)	58.8

• For details of Note)1 to Note)4, refer to P.165.
• Dimensions of Driver, refer to P.47.
*1 □□ in the motor part number represents the motor specifications.
*2 Basic type and RS485 communication type are "Position control type".
Detail of model designation, refer to P.116.
*3 When using a rotary encoder as an incremental system (not using multi-turn data), do not connect a battery for absolute encoder.

Torque characteristics (at AC200 V of power voltage <Dotted line represents the torque at 10 % less supply voltage.>)

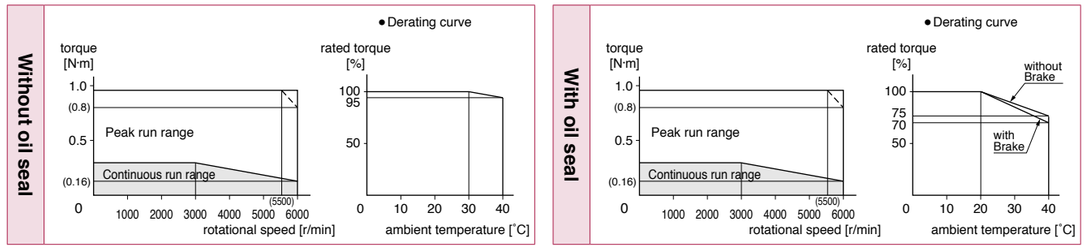

Dimensions

Mass: Without brake: 0.47 kg
With brake: 0.68 kg

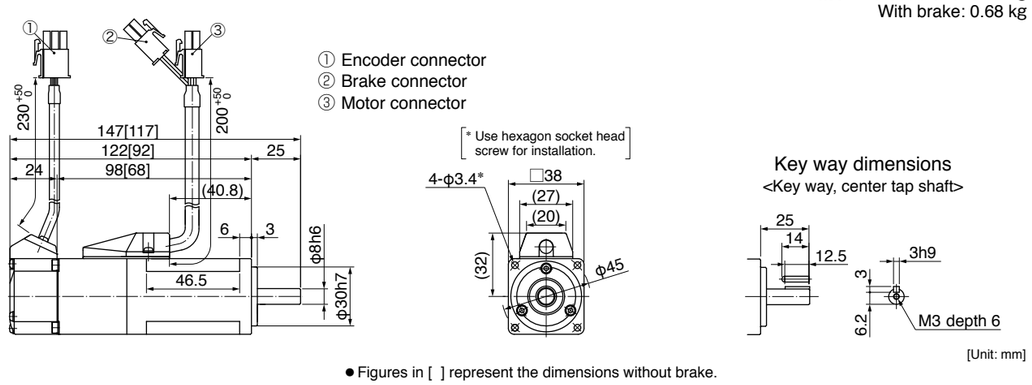

• Figures in [ ] represent the dimensions without brake.

<Cautions> Reduce the moment of inertia ratio if high speed response operation is required.
Dimensions are subject to change without notice. Contact us or a dealer for the latest information.
Read the Instruction Manual carefully and understand all precautions and remarks before using the products.
Please avoid the motor, or equipment containing the motor to be distributed to Japan, or other regions through Japan.

Special Order Product

200 V MSMF 200 W [Low inertia 60 mm sq.]

• Please contact us for more information.

Specifications

			AC200 V
Motor model *1	IP65		MSMF022L1□□M
Applicable driver	Model No.	Multifunction type	MADLT15SF
		RS485 communication type *2	MADLN15SG
		Basic type *2	MADLN15SE
	Frame symbol		A-frame
Power supply capacity		(kVA)	0.5
Rated output		(W)	200
Rated torque		(N·m)	0.64
Continuous stall torque		(N·m)	0.64
Momentary Max. peak torque		(N·m)	1.91
Rated current		(A(rms))	1.5
Max. current		(A(o-p))	6.5
Regenerative brake frequency (times/min) Note)1	Without option		No limit Note)2
	DV0P4283		No limit Note)2
Rated rotational speed		(r/min)	3000
Max. rotational speed		(r/min)	6000
Moment of inertia of rotor ($\times 10^{-4}$ kg·m^2)	Without brake		0.14
	With brake		0.17
Recommended moment of inertia ratio of the load and the rotor Note)3			30 times or less
Rotary encoder specifications *3			23-bit Absolute
	Resolution per single turn		8388608

• **Brake specifications** (For details, refer to P.167)

(This brake will be released when it is energized. Do not use this for braking the motor in motion.)

Static friction torque (N·m)	1.27 or more
Engaging time (ms)	50 or less
Releasing time (ms) Note)4	15 or less
Exciting current (DC) (A)	0.36
Releasing voltage (DC) (V)	1 or more
Exciting voltage (DC) (V)	24±1.2

• **Permissible load** (For details, refer to P.166)

During assembly	Radial load P-direction (N)	392
	Thrust load A-direction (N)	147
	Thrust load B-direction (N)	196
During operation	Radial load P-direction (N)	245
	Thrust load A, B-direction (N)	98.0

• For details of Note)1 to Note)4, refer to P.165.
• Dimensions of Driver, refer to P.47.
*1 □□ in the motor part number represents the motor specifications.
*2 Basic type and RS485 communication type are "Position control type".
Detail of model designation, refer to P.116.
*3 When using a rotary encoder as an incremental system (not using multi-turn data), do not connect a battery for absolute encoder.

Torque characteristics (at AC200 V of power voltage <Dotted line represents the torque at 10 % less supply voltage.>)

Without oil seal

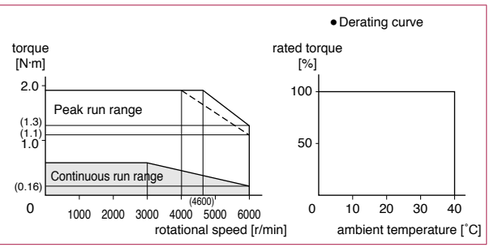

With oil seal

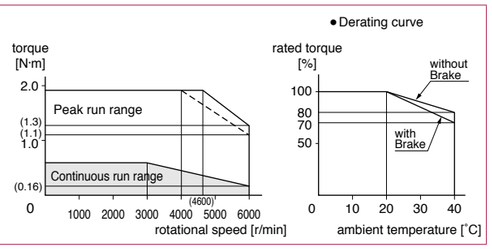

Dimensions

Mass: Without brake: 0.82 kg
With brake: 1.3 kg

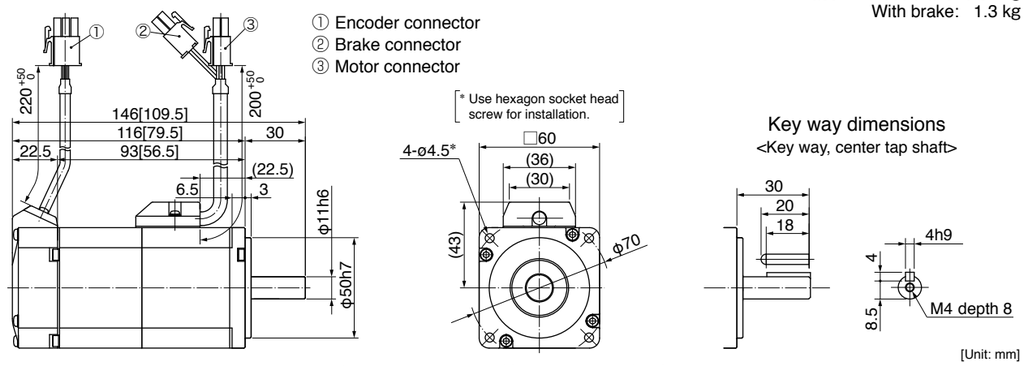

• Figures in [ ] represent the dimensions without brake.

<Cautions> Reduce the moment of inertia ratio if high speed response operation is required.
Dimensions are subject to change without notice. Contact us or a dealer for the latest information.
Read the Instruction Manual carefully and understand all precautions and remarks before using the products.
Please avoid the motor, or equipment containing the motor to be distributed to Japan, or other regions through Japan.

Special Order Product

200 V MSMF 400 W [Low inertia 60 mm sq.]

• Please contact us for more information.

Specifications

			AC200 V
Motor model *1	IP65		MSMF042L1□□M
Applicable driver	Model No.	Multifunction type	MBDLT25SF
		RS485 communication type *2	MBDLN25SG
		Basic type *2	MBDLN25SE
	Frame symbol		B-frame
Power supply capacity		(kVA)	0.9
Rated output		(W)	400
Rated torque		(N·m)	1.27
Continuous stall torque		(N·m)	1.27
Momentary Max. peak torque		(N·m)	3.82
Rated current		(A(rms))	2.4
Max. current		(A(o-p))	10.2
Regenerative brake frequency (times/min) Note)1	Without option		No limit Note)2
	DV0P4283		No limit Note)2
Rated rotational speed		(r/min)	3000
Max. rotational speed		(r/min)	6000
Moment of inertia of rotor ($\times 10^{-4}$ kg·m^2)	Without brake		0.27
	With brake		0.30
Recommended moment of inertia ratio of the load and the rotor Note)3			30 times or less
Rotary encoder specifications *3			23-bit Absolute
	Resolution per single turn		8388608

• **Brake specifications** (For details, refer to P.167)

(This brake will be released when it is energized. Do not use this for braking the motor in motion.)

Static friction torque (N·m)	1.27 or more
Engaging time (ms)	50 or less
Releasing time (ms) Note)4	15 or less
Exciting current (DC) (A)	0.36
Releasing voltage (DC) (V)	1 or more
Exciting voltage (DC) (V)	24±1.2

• **Permissible load** (For details, refer to P.166)

During assembly	Radial load P-direction (N)	392
	Thrust load A-direction (N)	147
	Thrust load B-direction (N)	196
During operation	Radial load P-direction (N)	245
	Thrust load A, B-direction (N)	98.0

• For details of Note)1 to Note)4, refer to P.165.
• Dimensions of Driver, refer to P.47.
*1 □□ in the motor part number represents the motor specifications.
*2 Basic type and RS485 communication type are "Position control type".
Detail of model designation, refer to P.116.
*3 When using a rotary encoder as an incremental system (not using multi-turn data), do not connect a battery for absolute encoder.

Torque characteristics (at AC200 V of power voltage <Dotted line represents the torque at 10 % less supply voltage.>)

Without oil seal

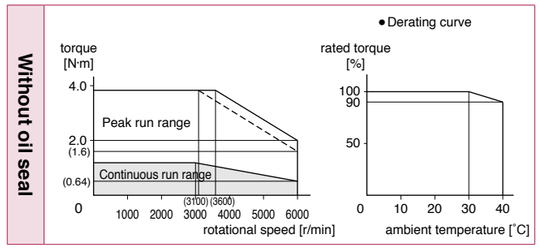

With oil seal

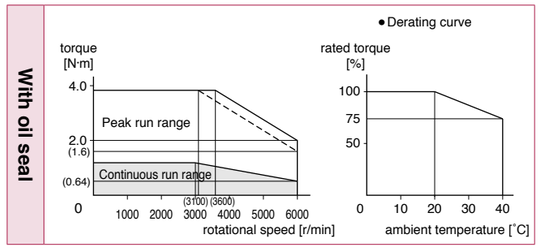

Dimensions

Mass: Without brake: 1.2 kg
With brake: 1.7 kg

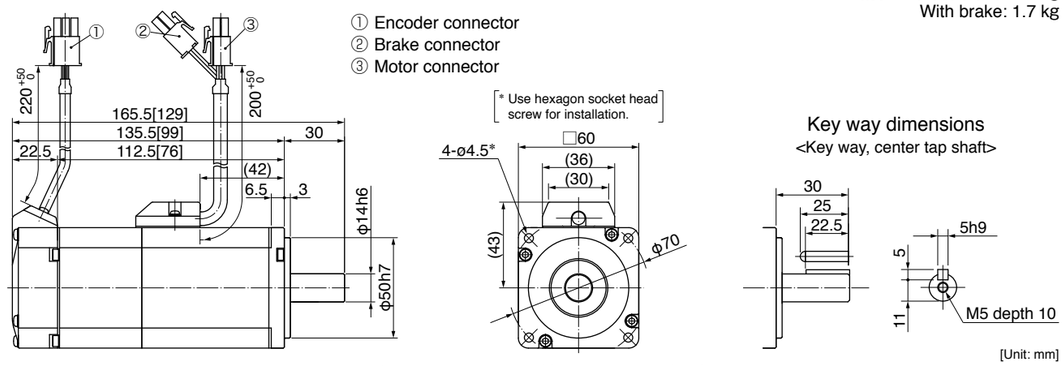

• Figures in [ ] represent the dimensions without brake.

<Cautions> Reduce the moment of inertia ratio if high speed response operation is required.
Dimensions are subject to change without notice. Contact us or a dealer for the latest information.
Read the Instruction Manual carefully and understand all precautions and remarks before using the products.
Please avoid the motor, or equipment containing the motor to be distributed to Japan, or other regions through Japan.

Special Order Product

200 V MSMF 750 W [Low inertia 80 mm sq.]

• Please contact us for more information.

Specifications

			AC200 V
Motor model *1	IP65		MSMF082L1□□M
Applicable driver	Model No.	Multifunction type	MCDLT35SF
		RS485 communication type *2	MCDLN35SG
		Basic type *2	MCDLN35SE
	Frame symbol		C-frame
Power supply capacity		(kVA)	1.3
Rated output		(W)	750
Rated torque		(N·m)	2.39
Continuous stall torque		(N·m)	2.39
Momentary Max. peak torque		(N·m)	7.16
Rated current		(A(rms))	4.1
Max. current		(A(o-p))	17.4
Regenerative brake frequency (times/min) Note)1	Without option		No limit Note)2
	DV0P4283		No limit Note)2
Rated rotational speed		(r/min)	3000
Max. rotational speed		(r/min)	6000
Moment of inertia of rotor ($\times 10^{-4}$ kg·m^2)	Without brake		0.96
	With brake		1.06
Recommended moment of inertia ratio of the load and the rotor Note)3			20 times or less
Rotary encoder specifications *3			23-bit Absolute
	Resolution per single turn		8388608

• **Brake specifications** (For details, refer to P.167)
(This brake will be released when it is energized. Do not use this for braking the motor in motion.)

Static friction torque (N·m)	2.45 or more
Engaging time (ms)	70 or less
Releasing time (ms) Note)4	20 or less
Exciting current (DC) (A)	0.42
Releasing voltage (DC) (V)	1 or more
Exciting voltage (DC) (V)	24±1.2

• **Permissible load** (For details, refer to P.166)

During assembly	Radial load P-direction (N)	686
	Thrust load A-direction (N)	294
	Thrust load B-direction (N)	392
During operation	Radial load P-direction (N)	392
	Thrust load A, B-direction (N)	147

• For details of Note)1 to Note)4, refer to P.165.
• Dimensions of Driver, refer to P.48.
*1 □□ in the motor part number represents the motor specifications.
*2 Basic type and RS485 communication type are "Position control type".
Detail of model designation, refer to P.116.
*3 When using a rotary encoder as an incremental system (not using multi-turn data), do not connect a battery for absolute encoder.

Torque characteristics (at AC200 V of power voltage <Dotted line represents the torque at 10 % less supply voltage.>)

Without oil seal

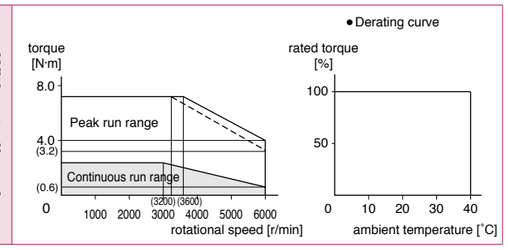

With oil seal

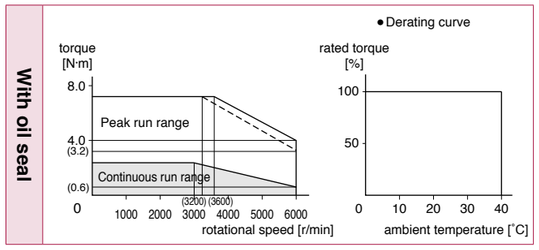

Dimensions

Mass: Without brake: 2.3 kg
With brake: 3.1 kg

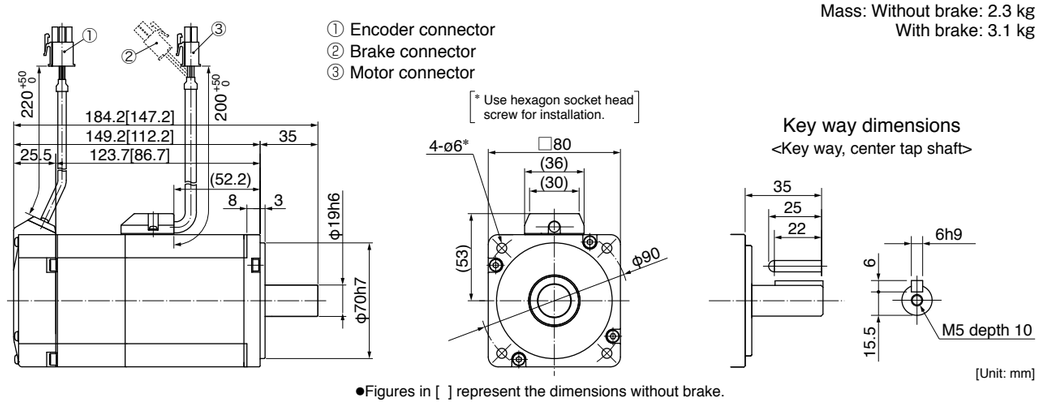

●Figures in [ ] represent the dimensions without brake.

<Cautions> Reduce the moment of inertia ratio if high speed response operation is required.
Dimensions are subject to change without notice. Contact us or a dealer for the latest information.
Read the Instruction Manual carefully and understand all precautions and remarks before using the products.
Please avoid the motor, or equipment containing the motor to be distributed to Japan, or other regions through Japan.

Special Order Product

200 V MSMF 1000 W [Low inertia 80 mm sq.]

• Please contact us for more information.

Specifications

			AC200 V
Motor model *1	IP65		MSMF092L1□□M
Applicable driver	Model No.	Multifunction type	MDDLT45SF
		RS485 communication type *2	MDDLN45SG
		Basic type *2	MDDLN45SE
	Frame symbol		D-frame
Power supply capacity		(kVA)	1.8
Rated output		(W)	1000
Rated torque		(N·m)	3.18
Continuous stall torque		(N·m)	3.18
Momentary Max. peak torque		(N·m)	9.55
Rated current		(A(rms))	5.7
Max. current		(A(o-p))	24.2
Regenerative brake frequency (times/min) Note)1	Without option		No limit Note)2
	DV0P4284		No limit Note)2
Rated rotational speed		(r/min)	3000
Max. rotational speed		(r/min)	6000
Moment of inertia of rotor ($\times 10^{-4}$ kg·m^2)	Without brake		1.26
	With brake		1.36
Recommended moment of inertia ratio of the load and the rotor Note)3			15 times or less
Rotary encoder specifications *3			23-bit Absolute
	Resolution per single turn		8388608

• **Brake specifications** (For details, refer to P.167)
(This brake will be released when it is energized. Do not use this for braking the motor in motion.)

Static friction torque (N·m)	3.80 or more
Engaging time (ms)	70 or less
Releasing time (ms) Note)4	20 or less
Exciting current (DC) (A)	0.42
Releasing voltage (DC) (V)	1 or more
Exciting voltage (DC) (V)	24±2.4

• **Permissible load** (For details, refer to P.166)

During assembly	Radial load P-direction (N)	686
	Thrust load A-direction (N)	294
	Thrust load B-direction (N)	392
During operation	Radial load P-direction (N)	392
	Thrust load A, B-direction (N)	147

• For details of Note)1 to Note)4, refer to P.165.
• Dimensions of Driver, refer to P.48.
*1 □□ in the motor part number represents the motor specifications.
*2 Basic type and RS485 communication type are "Position control type".
Detail of model designation, refer to P.116.
*3 When using a rotary encoder as an incremental system (not using multi-turn data), do not connect a battery for absolute encoder.

Torque characteristics (at AC200 V of power voltage <Dotted line represents the torque at 10 % less supply voltage.>)

Without oil seal

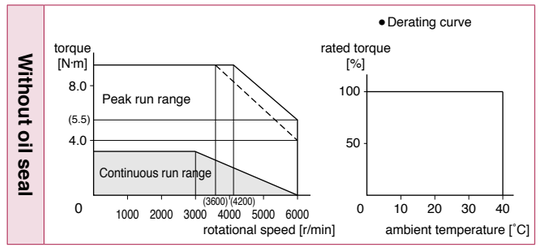

With oil seal

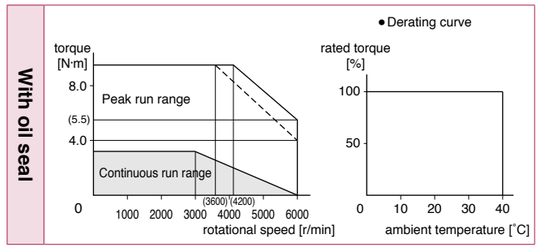

Dimensions

Mass: Without brake: 2.8 kg
With brake: 3.6 kg

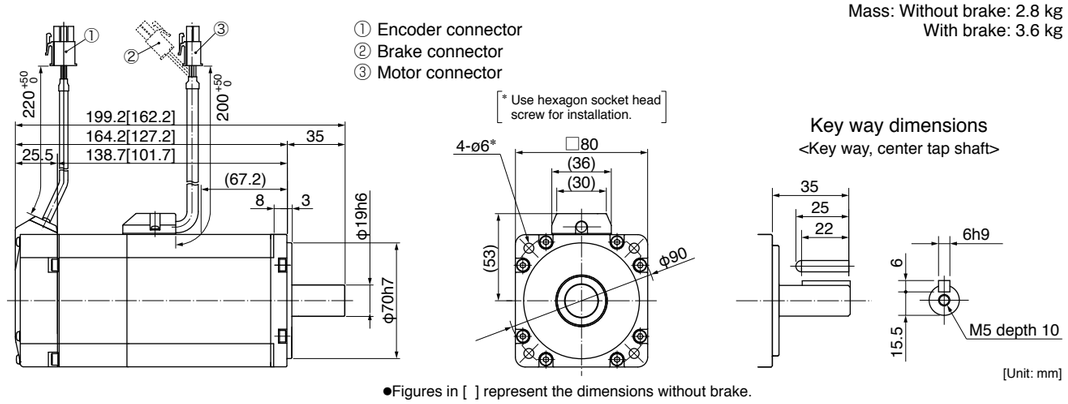

●Figures in [ ] represent the dimensions without brake.

<Cautions> Reduce the moment of inertia ratio if high speed response operation is required.
Dimensions are subject to change without notice. Contact us or a dealer for the latest information.
Read the Instruction Manual carefully and understand all precautions and remarks before using the products.
Please avoid the motor, or equipment containing the motor to be distributed to Japan, or other regions through Japan.

Special Order Product

200 V MSMF 1.0 kW [Low inertia 100 mm sq.]

• Please contact us for more information.

Specifications

			AC200 V
Motor model *1	IP67		MSMF102L1□□M
Applicable driver	Model No.	Multifunction type	MDDLT55SF
		RS485 communication type *2	MDDLN55SG
		Basic type *2	MDDLN55SE
	Frame symbol		D-frame
Power supply capacity		(kVA)	2.3
Rated output		(W)	1000
Rated torque		(N·m)	3.18
Continuous stall torque		(N·m)	3.82
Momentary Max. peak torque		(N·m)	9.55
Rated current		(A(rms))	6.6
Max. current		(A(o-p))	28
Regenerative brake frequency (times/min) Note)1	Without option		No limit Note)2
	DV0P4284		No limit Note)2
Rated rotational speed		(r/min)	3000
Max. rotational speed		(r/min)	5000
Moment of inertia of rotor ($\times 10^{-4}$ kg·m^2)	Without brake		2.15
	With brake		2.47
Recommended moment of inertia ratio of the load and the rotor Note)3			15 times or less
Rotary encoder specifications *3			23-bit Absolute
	Resolution per single turn		8388608

• **Brake specifications** (For details, refer to P.167)
(This brake will be released when it is energized. Do not use this for braking the motor in motion.)

Static friction torque (N·m)	8.0 or more
Engaging time (ms)	50 or less
Releasing time (ms) Note)4	15 or less
Exciting current (DC) (A)	0.81±10 %
Releasing voltage (DC) (V)	2 or more
Exciting voltage (DC) (V)	24±2.4

• **Permissible load** (For details, refer to P.166)

During assembly	Radial load P-direction (N)	980
	Thrust load A-direction (N)	588
	Thrust load B-direction (N)	686
During operation	Radial load P-direction (N)	490
	Thrust load A, B-direction (N)	196

• For details of Note)1 to Note)4, refer to P.165.
• Dimensions of Driver, refer to P.48.
*1 □□ in the motor part number represents the motor specifications.
*2 Basic type and RS485 communication type are "Position control type".
Detail of model designation, refer to P.116.
*3 When using a rotary encoder as an incremental system (not using multi-turn data), do not connect a battery for absolute encoder.

Torque characteristics (at AC200 V of power voltage <Dotted line represents the torque at 10 % less supply voltage.>)

With oil seal

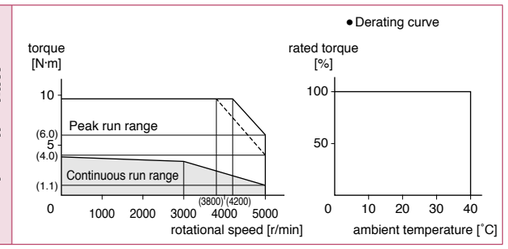

Dimensions

Mass: Without brake: 3.6 kg
With brake: 4.7 kg

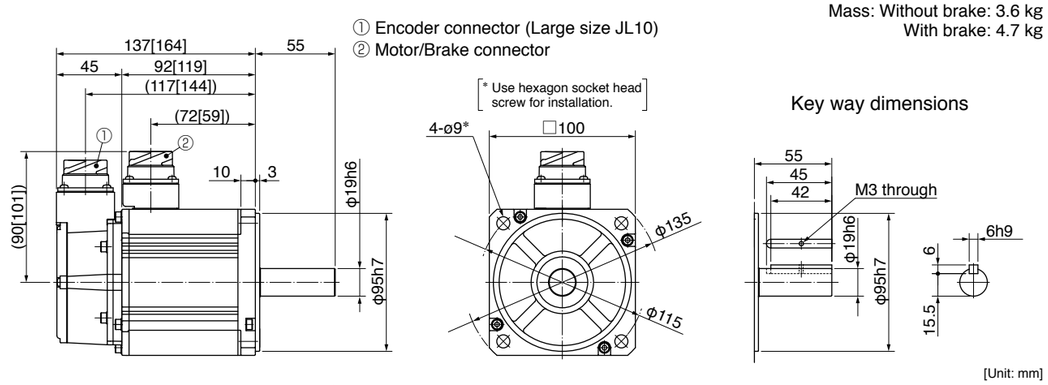

[Unit: mm]

● Figures in [ ] represent the dimensions with brake.

<Cautions> Reduce the moment of inertia ratio if high speed response operation is required.
Dimensions are subject to change without notice. Contact us or a dealer for the latest information.
Read the Instruction Manual carefully and understand all precautions and remarks before using the products.
Please avoid the motor, or equipment containing the motor to be distributed to Japan, or other regions through Japan.

Special Order Product

200 V MSMF 1.5 kW [Low inertia 100 mm sq.]

• Please contact us for more information.

Specifications

			AC200 V
Motor model *1	IP67		MSMF152L1□□M
Applicable driver	Model No.	Multifunction type	MDDLT55SF
		RS485 communication type *2	MDDLN55SG
		Basic type *2	MDDLN55SE
	Frame symbol		D-frame
Power supply capacity		(kVA)	2.3
Rated output		(W)	1500
Rated torque		(N·m)	4.77
Continuous stall torque		(N·m)	5.72
Momentary Max. peak torque		(N·m)	14.3
Rated current		(A(rms))	8.2
Max. current		(A(o-p))	35
Regenerative brake frequency (times/min) Note)1	Without option		No limit Note)2
	DV0P4284		No limit Note)2
Rated rotational speed		(r/min)	3000
Max. rotational speed		(r/min)	5000
Moment of inertia of rotor ($\times 10^{-4}$ kg·m^2)	Without brake		3.10
	With brake		3.45
Recommended moment of inertia ratio of the load and the rotor Note)3			15 times or less
Rotary encoder specifications *3			23-bit Absolute
	Resolution per single turn		8388608

• **Brake specifications** (For details, refer to P.167)
(This brake will be released when it is energized. Do not use this for braking the motor in motion.)

Static friction torque (N·m)	8.0 or more
Engaging time (ms)	50 or less
Releasing time (ms) Note)4	15 or less
Exciting current (DC) (A)	0.81±10 %
Releasing voltage (DC) (V)	2 or more
Exciting voltage (DC) (V)	24±2.4

• **Permissible load** (For details, refer to P.166)

During assembly	Radial load P-direction (N)	980
	Thrust load A-direction (N)	588
	Thrust load B-direction (N)	686
During operation	Radial load P-direction (N)	490
	Thrust load A, B-direction (N)	196

• For details of Note)1 to Note)4, refer to P.165.
• Dimensions of Driver, refer to P.48.
*1 □□ in the motor part number represents the motor specifications.
*2 Basic type and RS485 communication type are "Position control type".
Detail of model designation, refer to P.116.
*3 When using a rotary encoder as an incremental system (not using multi-turn data), do not connect a battery for absolute encoder.

Torque characteristics (at AC200 V of power voltage <Dotted line represents the torque at 10 % less supply voltage.>)

With oil seal

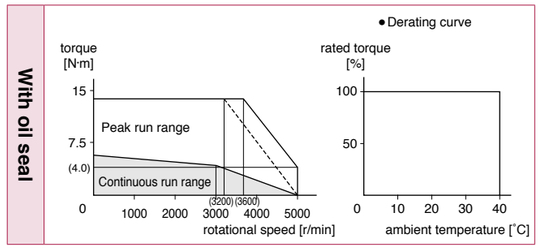

Dimensions

Mass: Without brake: 4.6 kg
With brake: 5.6 kg

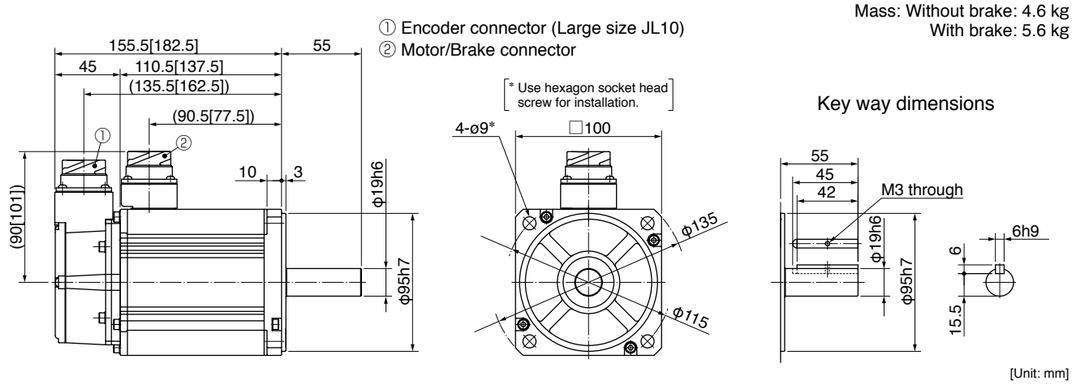

[Unit: mm]

● Figures in [ ] represent the dimensions with brake.

<Cautions> Reduce the moment of inertia ratio if high speed response operation is required.
Dimensions are subject to change without notice. Contact us or a dealer for the latest information.
Read the Instruction Manual carefully and understand all precautions and remarks before using the products.
Please avoid the motor, or equipment containing the motor to be distributed to Japan, or other regions through Japan.

Special Order Product

200 V MSMF 2.0 kW [Low inertia 100 mm sq.]

• Please contact us for more information.

Specifications

			AC200 V
Motor model *1	IP67		MSMF202L1□□M
Applicable driver	Model No.	Multifunction type	MEDLT83SF
		RS485 communication type *2	MEDLN83SG
		Basic type *2	MEDLN83SE
	Frame symbol		E-frame
Power supply capacity		(kVA)	3.8
Rated output		(W)	2000
Rated torque		(N·m)	6.37
Continuous stall torque		(N·m)	7.64
Momentary Max. peak torque		(N·m)	19.1
Rated current		(A(rms))	11.3
Max. current		(A(o-p))	48
Regenerative brake frequency (times/min) Note)1	Without option		No limit Note)2
	DV0P4285		No limit Note)2
Rated rotational speed		(r/min)	3000
Max. rotational speed		(r/min)	5000
Moment of inertia of rotor ($\times 10^{-4}$ kg·m^2)	Without brake		4.06
	With brake		4.41
Recommended moment of inertia ratio of the load and the rotor Note)3			15 times or less
Rotary encoder specifications *3			23-bit Absolute
	Resolution per single turn		8388608

• **Brake specifications** (For details, refer to P.167)
(This brake will be released when it is energized. Do not use this for braking the motor in motion.)

Static friction torque (N·m)	8.0 or more
Engaging time (ms)	50 or less
Releasing time (ms) Note)4	15 or less
Exciting current (DC) (A)	0.81±10 %
Releasing voltage (DC) (V)	2 or more
Exciting voltage (DC) (V)	24±2.4

• **Permissible load** (For details, refer to P.166)

During assembly	Radial load P-direction (N)	980
	Thrust load A-direction (N)	588
	Thrust load B-direction (N)	686
During operation	Radial load P-direction (N)	490
	Thrust load A, B-direction (N)	196

• For details of Note)1 to Note)4, refer to P.165.
• Dimensions of Driver, refer to P.49.
*1 □□ in the motor part number represents the motor specifications.
*2 Basic type and RS485 communication type are "Position control type".
Detail of model designation, refer to P.116.
*3 When using a rotary encoder as an incremental system (not using multi-turn data), do not connect a battery for absolute encoder.

Torque characteristics (at AC200 V of power voltage <Dotted line represents the torque at 10 % less supply voltage.>)

With oil seal

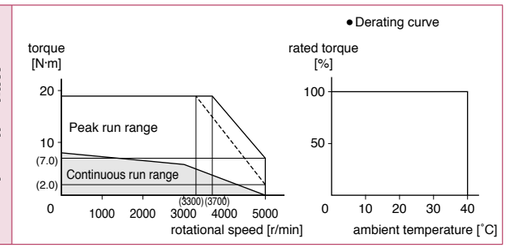

Dimensions

Mass: Without brake: 5.6 kg
With brake: 6.6 kg

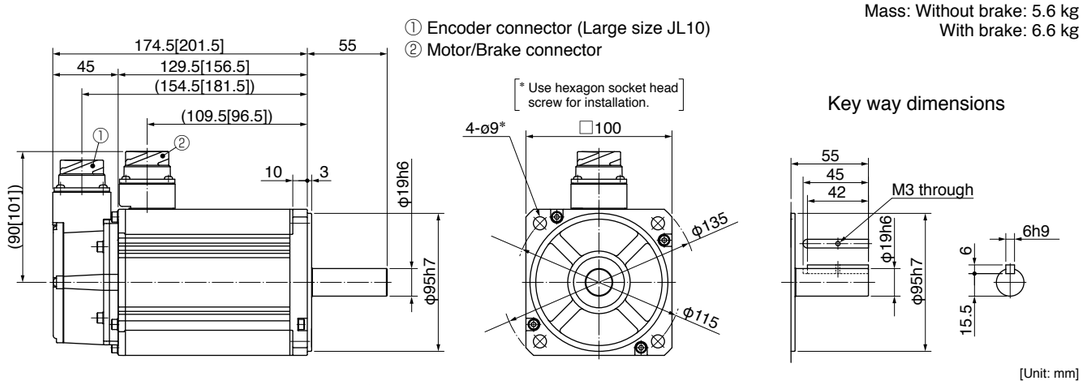

● Figures in [ ] represent the dimensions with brake.

<Cautions> Reduce the moment of inertia ratio if high speed response operation is required.
Dimensions are subject to change without notice. Contact us or a dealer for the latest information.
Read the Instruction Manual carefully and understand all precautions and remarks before using the products.
Please avoid the motor, or equipment containing the motor to be distributed to Japan, or other regions through Japan.

Special Order Product

200 V MSMF 3.0 kW [Low inertia 120 mm sq.]

• Please contact us for more information.

Specifications

			AC200 V
Motor model *1	IP67		MSMF302L1□□M
Applicable driver	Model No.	Multifunction type	MFDLTA3SF
		RS485 communication type *2	MFDLNA3SG
		Basic type *2	MFDLNA3SE
	Frame symbol		F-frame
Power supply capacity		(kVA)	4.5
Rated output		(W)	3000
Rated torque		(N·m)	9.55
Continuous stall torque		(N·m)	11.0
Momentary Max. peak torque		(N·m)	28.6
Rated current		(A(rms))	18.1
Max. current		(A(o-p))	77
Regenerative brake frequency (times/min) Note)1	Without option		No limit Note)2
	DV0P4285×2		No limit Note)2
Rated rotational speed		(r/min)	3000
Max. rotational speed		(r/min)	5000
Moment of inertia of rotor ($\times 10^{-4}$ kg·m^2)	Without brake		7.04
	With brake		7.38
Recommended moment of inertia ratio of the load and the rotor Note)3			15 times or less
Rotary encoder specifications *3			23-bit Absolute
	Resolution per single turn		8388608

• **Brake specifications** (For details, refer to P.167)
(This brake will be released when it is energized. Do not use this for braking the motor in motion.)

Static friction torque (N·m)	12.0 or more
Engaging time (ms)	80 or less
Releasing time (ms) Note)4	15 or less
Exciting current (DC) (A)	0.81±10 %
Releasing voltage (DC) (V)	2 or more
Exciting voltage (DC) (V)	24±2.4

• **Permissible load** (For details, refer to P.166)

During assembly	Radial load P-direction (N)	980
	Thrust load A-direction (N)	588
	Thrust load B-direction (N)	686
During operation	Radial load P-direction (N)	490
	Thrust load A, B-direction (N)	196

• For details of Note)1 to Note)4, refer to P.165.
• Dimensions of Driver, refer to P.49.
*1 □□ in the motor part number represents the motor specifications.
*2 Basic type and RS485 communication type are "Position control type".
Detail of model designation, refer to P.116.
*3 When using a rotary encoder as an incremental system (not using multi-turn data), do not connect a battery for absolute encoder.

Torque characteristics (at AC200 V of power voltage <Dotted line represents the torque at 10 % less supply voltage.>)

With oil seal

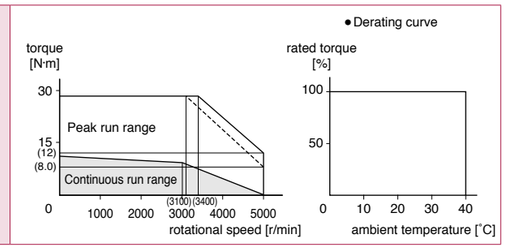

Dimensions

Mass: Without brake: 8.7 kg
With brake: 9.9 kg

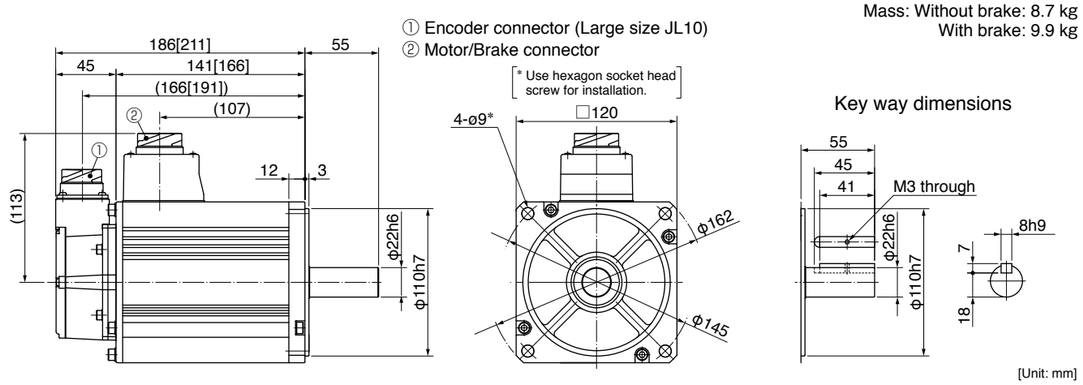

● Figures in [ ] represent the dimensions with brake.

<Cautions> Reduce the moment of inertia ratio if high speed response operation is required.
Dimensions are subject to change without notice. Contact us or a dealer for the latest information.
Read the Instruction Manual carefully and understand all precautions and remarks before using the products.
Please avoid the motor, or equipment containing the motor to be distributed to Japan, or other regions through Japan.

Special Order Product

200 V MSMF 4.0 kW [Low inertia 130 mm sq.]

• Please contact us for more information.

Specifications

			AC200 V
Motor model *1	IP67		MSMF402L1□□M
Applicable driver	Model No.	Multifunction type	MFDLTB3SF
		RS485 communication type *2	MFDLNB3SG
		Basic type *2	MFDLNB3SE
	Frame symbol		F-frame
Power supply capacity (kVA)			7.5
Rated output (W)			4000
Rated torque (N·m)			12.7
Continuous stall torque (N·m)			15.2
Momentary Max. peak torque (N·m)			38.2
Rated current (A(rms))			19.6
Max. current (A(o-p))			83
Regenerative brake frequency (times/min) Note)1	Without option		No limit Note)2
	DV0P4285×2		No limit Note)2
Rated rotational speed (r/min)			3000
Max. rotational speed (r/min)			4500
Moment of inertia of rotor ($\times 10^{-4}$ kg·m^2)	Without brake		14.4
	With brake		15.6
Recommended moment of inertia ratio of the load and the rotor Note)3			15 times or less
Rotary encoder specifications *3			23-bit Absolute
	Resolution per single turn		8388608

• **Brake specifications** (For details, refer to P.167)
(This brake will be released when it is energized. Do not use this for braking the motor in motion.)

Static friction torque (N·m)	16.2 or more
Engaging time (ms)	110 or less
Releasing time (ms) Note)4	50 or less
Exciting current (DC) (A)	0.90±10 %
Releasing voltage (DC) (V)	2 or more
Exciting voltage (DC) (V)	24±2.4

• **Permissible load** (For details, refer to P.166)

During assembly	Radial load P-direction (N)	980
	Thrust load A-direction (N)	588
	Thrust load B-direction (N)	686
During operation	Radial load P-direction (N)	784
	Thrust load A, B-direction (N)	343

• For details of Note)1 to Note)4, refer to P.165.
• Dimensions of Driver, refer to P.49.
*1 □□ in the motor part number represents the motor specifications.
*2 Basic type and RS485 communication type are "Position control type".
Detail of model designation, refer to P.116.
*3 When using a rotary encoder as an incremental system (not using multi-turn data), do not connect a battery for absolute encoder.

Torque characteristics (at AC200 V of power voltage <Dotted line represents the torque at 10 % less supply voltage.>)

With oil seal

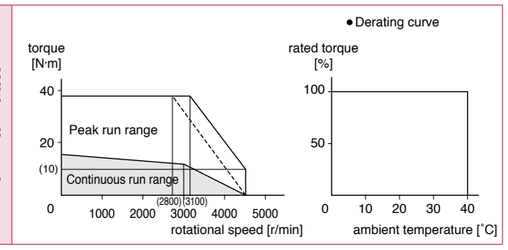

Dimensions

Mass: Without brake: 11.5 kg
With brake: 13.2 kg

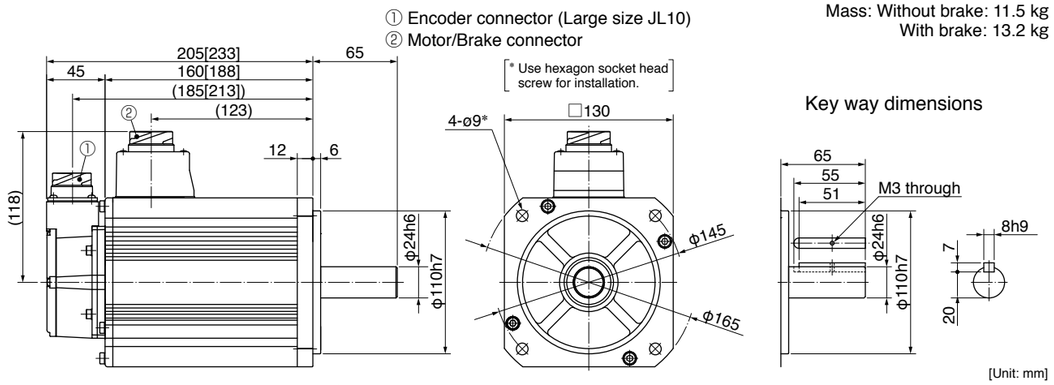

● Figures in [ ] represent the dimensions with brake.

<Cautions> Reduce the moment of inertia ratio if high speed response operation is required.
Dimensions are subject to change without notice. Contact us or a dealer for the latest information.
Read the Instruction Manual carefully and understand all precautions and remarks before using the products.
Please avoid the motor, or equipment containing the motor to be distributed to Japan, or other regions through Japan.

Special Order Product

200 V MSMF 5.0 kW [Low inertia 130 mm sq.]

• Please contact us for more information.

Specifications

			AC200 V
Motor model *1	IP67		MSMF502L1□□M
Applicable driver	Model No.	Multifunction type	MFDLTB3SF
		RS485 communication type *2	MFDLNB3SG
		Basic type *2	MFDLNB3SE
	Frame symbol		F-frame
Power supply capacity (kVA)			7.5
Rated output (W)			5000
Rated torque (N·m)			15.9
Continuous stall torque (N·m)			19.1
Momentary Max. peak torque (N·m)			47.7
Rated current (A(rms))			24.0
Max. current (A(o-p))			102
Regenerative brake frequency (times/min) Note)1	Without option		No limit Note)2
	DV0P4285×2		No limit Note)2
Rated rotational speed (r/min)			3000
Max. rotational speed (r/min)			4500
Moment of inertia of rotor ($\times 10^{-4}$ kg·m^2)	Without brake		19.0
	With brake		20.2
Recommended moment of inertia ratio of the load and the rotor Note)3			15 times or less
Rotary encoder specifications *3			23-bit Absolute
	Resolution per single turn		8388608

• **Brake specifications** (For details, refer to P.167)
(This brake will be released when it is energized. Do not use this for braking the motor in motion.)

Static friction torque (N·m)	22.0 or more
Engaging time (ms)	110 or less
Releasing time (ms) Note)4	50 or less
Exciting current (DC) (A)	0.90±10 %
Releasing voltage (DC) (V)	2 or more
Exciting voltage (DC) (V)	24±2.4

• **Permissible load** (For details, refer to P.166)

During assembly	Radial load P-direction (N)	980
	Thrust load A-direction (N)	588
	Thrust load B-direction (N)	686
During operation	Radial load P-direction (N)	784
	Thrust load A, B-direction (N)	343

• For details of Note)1 to Note)4, refer to P.165.
• Dimensions of Driver, refer to P.49.
*1 □□ in the motor part number represents the motor specifications.
*2 Basic type and RS485 communication type are "Position control type".
Detail of model designation, refer to P.116.
*3 When using a rotary encoder as an incremental system (not using multi-turn data), do not connect a battery for absolute encoder.

Torque characteristics (at AC200 V of power voltage <Dotted line represents the torque at 10 % less supply voltage.>)

With oil seal

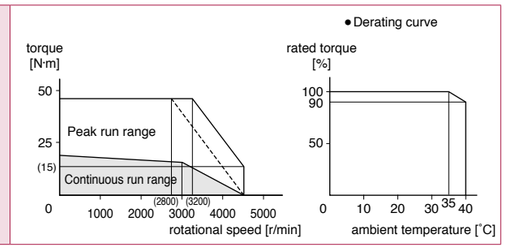

Dimensions

Mass: Without brake: 14.5 kg
With brake: 16.1 kg

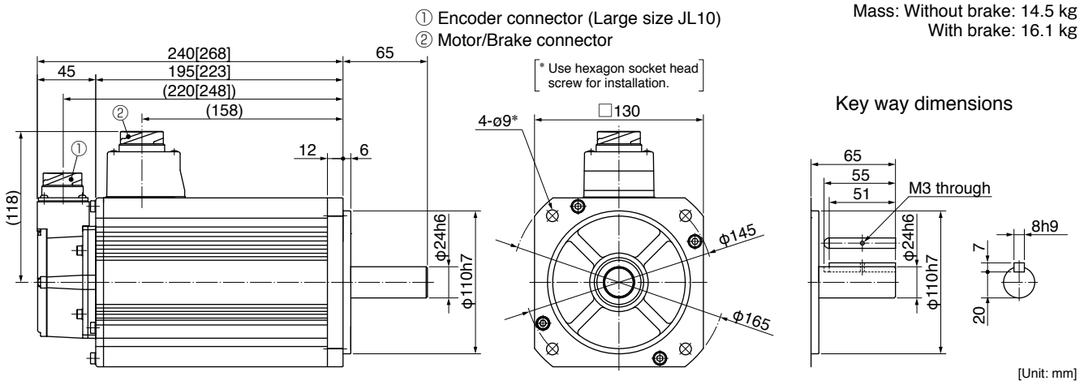

● Figures in [ ] represent the dimensions with brake.

<Cautions> Reduce the moment of inertia ratio if high speed response operation is required.
Dimensions are subject to change without notice. Contact us or a dealer for the latest information.
Read the Instruction Manual carefully and understand all precautions and remarks before using the products.
Please avoid the motor, or equipment containing the motor to be distributed to Japan, or other regions through Japan.

Special Order Product

200 V MQMF 100 W [Middle inertia Flat type 60 mm sq.]

• Please contact us for more information.

Specifications

			AC200 V
Motor model *1	IP65		MQMF012L1□□M
Applicable driver	Model No.	Multifunction type	MADLT05SF
		RS485 communication type *2	MADLN05SG
		Basic type *2	MADLN05SE
	Frame symbol		A-frame
Power supply capacity		(kVA)	0.5
Rated output		(W)	100
Rated torque		(N·m)	0.32
Continuous stall torque		(N·m)	0.33
Momentary Max. peak torque		(N·m)	1.11
Rated current		(A(rms))	1.1
Max. current		(A(o-p))	5.5
Regenerative brake frequency (times/min) Note)1	Without option		No limit Note)2
	DV0P4281		No limit Note)2
Rated rotational speed		(r/min)	3000
Max. rotational speed		(r/min)	6500
Moment of inertia of rotor ($\times 10^{-4}$ kg·m^2)	Without brake		0.15
	With brake		0.18
Recommended moment of inertia ratio of the load and the rotor Note)3			20 times or less
Rotary encoder specifications *3			23-bit Absolute
	Resolution per single turn		8388608

• Brake specifications (For details, refer to P.167)

(This brake will be released when it is energized. Do not use this for braking the motor in motion.)

Static friction torque (N·m)	0.39 or more
Engaging time (ms)	15 or less
Releasing time (ms) Note)4	20 or less
Exciting current (DC) (A)	0.30
Releasing voltage (DC) (V)	1 or more
Exciting voltage (DC) (V)	24±2.4

• Permissible load (For details, refer to P.166)

During assembly	Radial load P-direction (N)	147
	Thrust load A-direction (N)	88
	Thrust load B-direction (N)	117.6
During operation	Radial load P-direction (N)	68.6
	Thrust load A, B-direction (N)	58.8

• For details of Note)1 to Note)4, refer to P.165.
• Dimensions of Driver, refer to P.47.
*1 □□ in the motor part number represents the motor specifications.
*2 Basic type and RS485 communication type are "Position control type".
Detail of model designation, refer to P.116.
*3 When using a rotary encoder as an incremental system (not using multi-turn data), do not connect a battery for absolute encoder.

Torque characteristics (at AC200 V of power voltage <Dotted line represents the torque at 10 % less supply voltage.>)

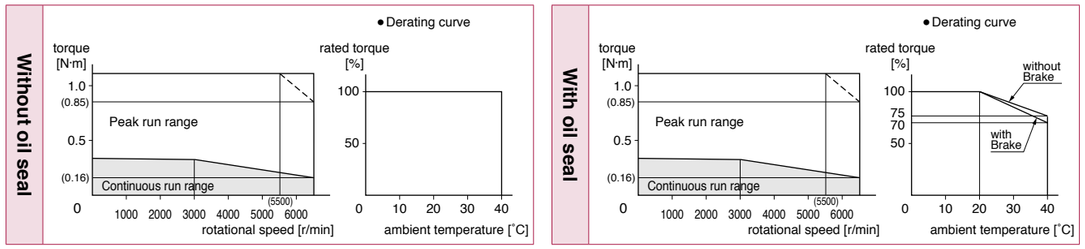

Dimensions

Mass: Without brake: 0.54 kg (0.57 kg with oil seal)
With brake: 0.79 kg (0.82 kg with oil seal)

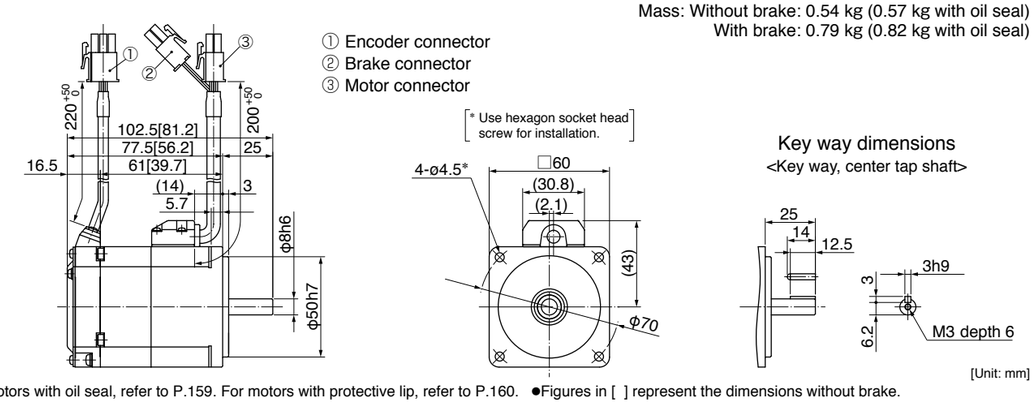

For motors with oil seal, refer to P.159. For motors with protective lip, refer to P.160. ●Figures in [ ] represent the dimensions without brake.

<Cautions> Reduce the moment of inertia ratio if high speed response operation is required.
Dimensions are subject to change without notice. Contact us or a dealer for the latest information.
Read the Instruction Manual carefully and understand all precautions and remarks before using the products.
Please avoid the motor, or equipment containing the motor to be distributed to Japan, or other regions through Japan.

Special Order Product

200 V MQMF 200 W [Middle inertia Flat type 80 mm sq.]

• Please contact us for more information.

Specifications

			AC200 V
Motor model *1	IP65		MQMF022L1□□M
Applicable driver	Model No.	Multifunction type	MADLT15SF
		RS485 communication type *2	MADLN15SG
		Basic type *2	MADLN15SE
	Frame symbol		A-frame
Power supply capacity		(kVA)	0.5
Rated output		(W)	200
Rated torque		(N·m)	0.64
Continuous stall torque		(N·m)	0.76
Momentary Max. peak torque		(N·m)	2.23
Rated current		(A(rms))	1.4
Max. current		(A(o-p))	6.9
Regenerative brake frequency (times/min) Note)1	Without option		No limit Note)2
	DV0P4283		No limit Note)2
Rated rotational speed		(r/min)	3000
Max. rotational speed		(r/min)	6500
Moment of inertia of rotor ($\times 10^{-4}$ kg·m^2)	Without brake		0.50
	With brake		0.59
Recommended moment of inertia ratio of the load and the rotor Note)3			20 times or less
Rotary encoder specifications *3			23-bit Absolute
	Resolution per single turn		8388608

• Brake specifications (For details, refer to P.167)

(This brake will be released when it is energized. Do not use this for braking the motor in motion.)

Static friction torque (N·m)	1.6 or more
Engaging time (ms)	70 or less
Releasing time (ms) Note)4	20 or less
Exciting current (DC) (A)	0.36
Releasing voltage (DC) (V)	1 or more
Exciting voltage (DC) (V)	24±2.4

• Permissible load (For details, refer to P.166)

During assembly	Radial load P-direction (N)	392
	Thrust load A-direction (N)	147
	Thrust load B-direction (N)	196
During operation	Radial load P-direction (N)	245
	Thrust load A, B-direction (N)	98

• For details of Note)1 to Note)4, refer to P.165.
• Dimensions of Driver, refer to P.47.
*1 □□ in the motor part number represents the motor specifications.
*2 Basic type and RS485 communication type are "Position control type".
Detail of model designation, refer to P.116.
*3 When using a rotary encoder as an incremental system (not using multi-turn data), do not connect a battery for absolute encoder.

Torque characteristics (at AC200 V of power voltage <Dotted line represents the torque at 10 % less supply voltage.>)

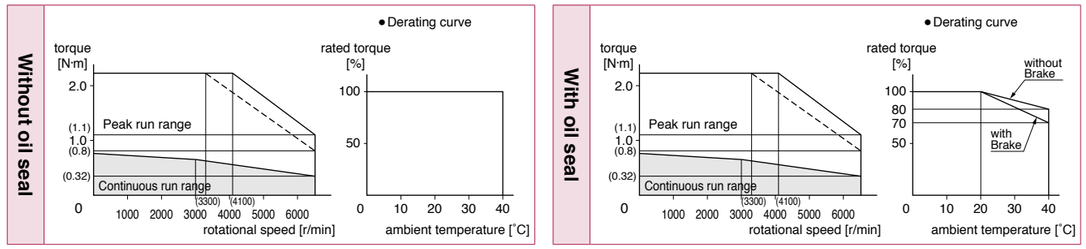

Dimensions

Mass: Without brake: 1.1 kg (1.2 kg with oil seal)
With brake: 1.5 kg (1.6 kg with oil seal)

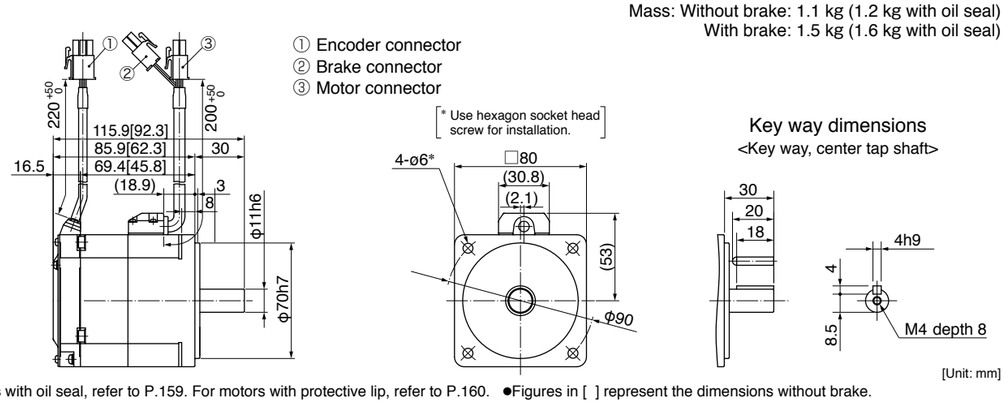

For motors with oil seal, refer to P.159. For motors with protective lip, refer to P.160. ●Figures in [ ] represent the dimensions without brake.

<Cautions> Reduce the moment of inertia ratio if high speed response operation is required.
Dimensions are subject to change without notice. Contact us or a dealer for the latest information.
Read the Instruction Manual carefully and understand all precautions and remarks before using the products.
Please avoid the motor, or equipment containing the motor to be distributed to Japan, or other regions through Japan.

Special Order Product

200 V MQMF 400 W [Middle inertia Flat type 80 mm sq.]

• Please contact us for more information.

Specifications

			AC200 V
Motor model *1	IP65		MQMF042L1□□M
Applicable driver	Model No.	Multifunction type	MBDLT25SF
		RS485 communication type *2	MBDLN25SG
		Basic type *2	MBDLN25SE
	Frame symbol		B-frame
Power supply capacity		(kVA)	0.9
Rated output		(W)	400
Rated torque		(N·m)	1.27
Continuous stall torque		(N·m)	1.40
Momentary Max. peak torque		(N·m)	4.46
Rated current		(A(rms))	2.1
Max. current		(A(o-p))	10.4
Regenerative brake frequency (times/min) Note)1	Without option		No limit Note)2
	DV0P4283		No limit Note)2
Rated rotational speed		(r/min)	3000
Max. rotational speed		(r/min)	6500
Moment of inertia of rotor ($\times 10^{-4}$ kg·m^2)	Without brake		0.98
	With brake		1.06
Recommended moment of inertia ratio of the load and the rotor Note)3			20 times or less
Rotary encoder specifications *3			23-bit Absolute
	Resolution per single turn		8388608

• **Brake specifications** (For details, refer to P.167)
(This brake will be released when it is energized. Do not use this for braking the motor in motion.)

Static friction torque (N·m)	1.6 or more
Engaging time (ms)	70 or less
Releasing time (ms) Note)4	20 or less
Exciting current (DC) (A)	0.36
Releasing voltage (DC) (V)	1 or more
Exciting voltage (DC) (V)	24±2.4

• **Permissible load** (For details, refer to P.166)

During assembly	Radial load P-direction (N)	392
	Thrust load A-direction (N)	147
	Thrust load B-direction (N)	196
During operation	Radial load P-direction (N)	245
	Thrust load A, B-direction (N)	98

• For details of Note)1 to Note)4, refer to P.165.
• Dimensions of Driver, refer to P.47.
*1 □□ in the motor part number represents the motor specifications.
*2 Basic type and RS485 communication type are "Position control type".
Detail of model designation, refer to P.116.
*3 When using a rotary encoder as an incremental system (not using multi-turn data), do not connect a battery for absolute encoder.

Torque characteristics (at AC200 V of power voltage <Dotted line represents the torque at 10 % less supply voltage.>)

Without oil seal

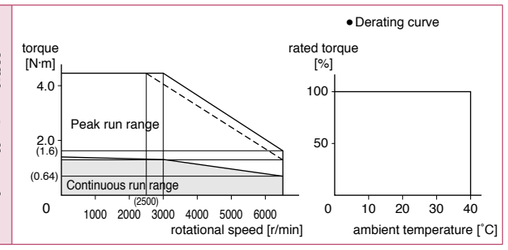

With oil seal

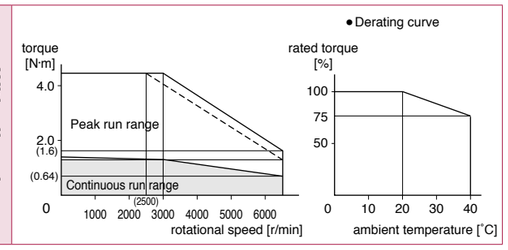

Dimensions

Mass: Without brake: 1.5 kg (1.6 kg with oil seal)
With brake: 2.0 kg (2.1 kg with oil seal)

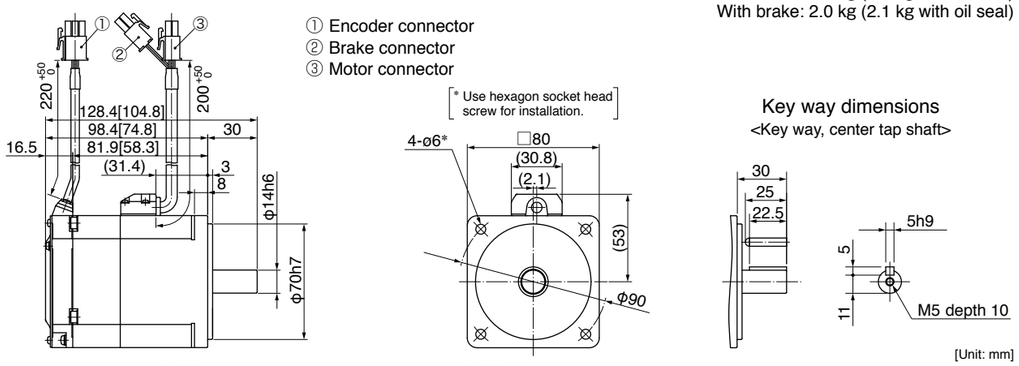

[Unit: mm]

For motors with oil seal, refer to P.159. For motors with protective lip, refer to P.160. ●Figures in [ ] represent the dimensions without brake.

<Cautions> Reduce the moment of inertia ratio if high speed response operation is required.
Dimensions are subject to change without notice. Contact us or a dealer for the latest information.
Read the Instruction Manual carefully and understand all precautions and remarks before using the products.
Please avoid the motor, or equipment containing the motor to be distributed to Japan, or other regions through Japan.

Special Order Product

200 V MHMF 50 W [High inertia 40 mm sq.]

• Please contact us for more information.

Specifications

			AC200 V
Motor model *1	IP65		MHMF5AZL1□□M
Applicable driver	Model No.	Multifunction type	MADLT05SF
		RS485 communication type *2	MADLN05SG
		Basic type *2	MADLN05SE
	Frame symbol		A-frame
Power supply capacity		(kVA)	0.5
Rated output		(W)	50
Rated torque		(N·m)	0.16
Continuous stall torque		(N·m)	0.18
Momentary Max. peak torque		(N·m)	0.56
Rated current		(A(rms))	1.1
Max. current		(A(o-p))	5.5
Regenerative brake frequency (times/min) Note)1	Without option		No limit Note)2
	DV0P4281		No limit Note)2
Rated rotational speed		(r/min)	3000
Max. rotational speed		(r/min)	6500
Moment of inertia of rotor ($\times 10^{-4}$ kg·m^2)	Without brake		0.038
	With brake		0.042
Recommended moment of inertia ratio of the load and the rotor Note)3			30 times or less
Rotary encoder specifications *3			23-bit Absolute
	Resolution per single turn		8388608

• **Brake specifications** (For details, refer to P.167)
(This brake will be released when it is energized. Do not use this for braking the motor in motion.)

Static friction torque (N·m)	0.38 or more
Engaging time (ms)	35 or less
Releasing time (ms) Note)4	20 or less
Exciting current (DC) (A)	0.30
Releasing voltage (DC) (V)	1 or more
Exciting voltage (DC) (V)	24±2.4

• **Permissible load** (For details, refer to P.166)

During assembly	Radial load P-direction (N)	147
	Thrust load A-direction (N)	88
	Thrust load B-direction (N)	117.6
During operation	Radial load P-direction (N)	68.6
	Thrust load A, B-direction (N)	49

• For details of Note)1 to Note)4, refer to P.165.
• Dimensions of Driver, refer to P.47.
*1 □□ in the motor part number represents the motor specifications.
*2 Basic type and RS485 communication type are "Position control type".
Detail of model designation, refer to P.116.
*3 When using a rotary encoder as an incremental system (not using multi-turn data), do not connect a battery for absolute encoder.

Torque characteristics (at AC200 V of power voltage <Dotted line represents the torque at 10 % less supply voltage.>)

Without oil seal

With oil seal

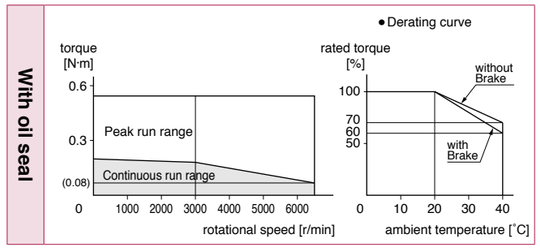

Dimensions

Mass: Without brake: 0.29 kg (0.31 kg with oil seal)
With brake: 0.51 kg (0.53 kg with oil seal)

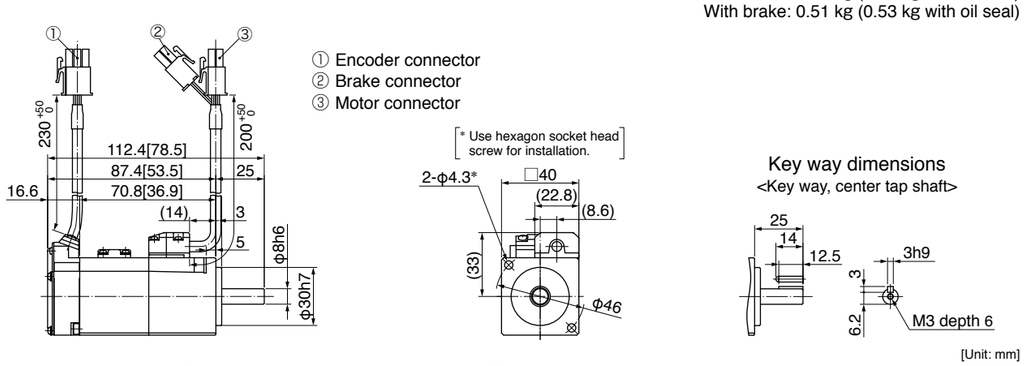

[Unit: mm]

For motors with oil seal, refer to P.161. For motors with protective lip, refer to P.163. ●Figures in [ ] represent the dimensions without brake.

<Cautions> Reduce the moment of inertia ratio if high speed response operation is required.
Dimensions are subject to change without notice. Contact us or a dealer for the latest information.
Read the Instruction Manual carefully and understand all precautions and remarks before using the products.
Please avoid the motor, or equipment containing the motor to be distributed to Japan, or other regions through Japan.

Special Order Product

200 V MHMF 100 W [High inertia 40 mm sq.]

• Please contact us for more information.

Specifications

			AC200 V
Motor model *1	IP65		MHMF012L1□□M
Applicable driver	Model No.	Multifunction type	MADLT05SF
		RS485 communication type *2	MADLN05SG
		Basic type *2	MADLN05SE
	Frame symbol		A-frame
Power supply capacity		(kVA)	0.5
Rated output		(W)	100
Rated torque		(N·m)	0.32
Continuous stall torque		(N·m)	0.33
Momentary Max. peak torque		(N·m)	1.11
Rated current		(A(rms))	1.1
Max. current		(A(o-p))	5.5
Regenerative brake frequency (times/min) Note)1	Without option		No limit Note)2
	DV0P4281		No limit Note)2
Rated rotational speed		(r/min)	3000
Max. rotational speed		(r/min)	6500
Moment of inertia of rotor ($\times 10^{-4}$ kg·m^2)	Without brake		0.071
	With brake		0.074
Recommended moment of inertia ratio of the load and the rotor Note)3			30 times or less
Rotary encoder specifications *3			23-bit Absolute
	Resolution per single turn		8388608

• **Brake specifications** (For details, refer to P.167)
(This brake will be released when it is energized. Do not use this for braking the motor in motion.)

Static friction torque (N·m)	0.38 or more
Engaging time (ms)	35 or less
Releasing time (ms) Note)4	20 or less
Exciting current (DC) (A)	0.30
Releasing voltage (DC) (V)	1 or more
Exciting voltage (DC) (V)	24±2.4

• **Permissible load** (For details, refer to P.166)

During assembly	Radial load P-direction (N)	147
	Thrust load A-direction (N)	88
	Thrust load B-direction (N)	117.6
During operation	Radial load P-direction (N)	68.6
	Thrust load A, B-direction (N)	58.8

• For details of Note)1 to Note)4, refer to P.165.
• Dimensions of Driver, refer to P.47.
*1 □□ in the motor part number represents the motor specifications.
*2 Basic type and RS485 communication type are "Position control type".
Detail of model designation, refer to P.116.
*3 When using a rotary encoder as an incremental system (not using multi-turn data), do not connect a battery for absolute encoder.

Torque characteristics (at AC200 V of power voltage <Dotted line represents the torque at 10 % less supply voltage.>)

Without oil seal

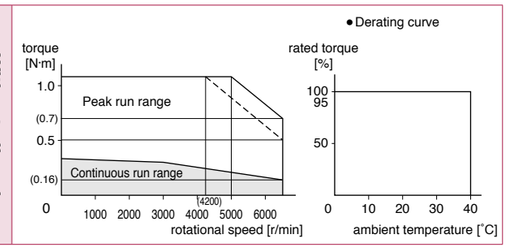

With oil seal

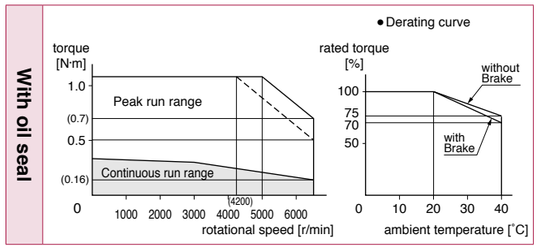

Dimensions

Mass: Without brake: 0.40 kg (0.42 kg with oil seal)
With brake: 0.62 kg (0.64 kg with oil seal)

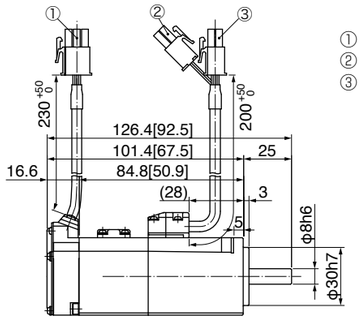

① Encoder connector
② Brake connector
③ Motor connector

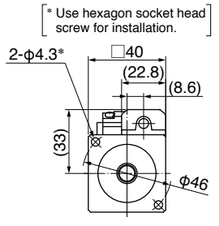

Key way dimensions
<Key way, center tap shaft>

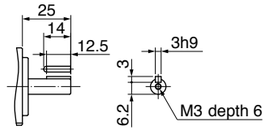

[Unit: mm]

For motors with oil seal, refer to P.161. For motors with protective lip, refer to P.163. ●Figures in [ ] represent the dimensions without brake.

<Cautions> Reduce the moment of inertia ratio if high speed response operation is required.
Dimensions are subject to change without notice. Contact us or a dealer for the latest information.
Read the Instruction Manual carefully and understand all precautions and remarks before using the products.
Please avoid the motor, or equipment containing the motor to be distributed to Japan, or other regions through Japan.

Special Order Product

200 V MHMF 200 W [High inertia 60 mm sq.]

• Please contact us for more information.

Specifications

			AC200 V
Motor model *1	IP65		MHMF022L1□□M
Applicable driver	Model No.	Multifunction type	MADLT15SF
		RS485 communication type *2	MADLN15SG
		Basic type *2	MADLN15SE
	Frame symbol		A-frame
Power supply capacity		(kVA)	0.5
Rated output		(W)	200
Rated torque		(N·m)	0.64
Continuous stall torque		(N·m)	0.76
Momentary Max. peak torque		(N·m)	2.23
Rated current		(A(rms))	1.4
Max. current		(A(o-p))	6.9
Regenerative brake frequency (times/min) Note)1	Without option		No limit Note)2
	DV0P4283		No limit Note)2
Rated rotational speed		(r/min)	3000
Max. rotational speed		(r/min)	6500
Moment of inertia of rotor ($\times 10^{-4}$ kg·m^2)	Without brake		0.29
	With brake		0.31
Recommended moment of inertia ratio of the load and the rotor Note)3			30 times or less
Rotary encoder specifications *3			23-bit Absolute
	Resolution per single turn		8388608

• **Brake specifications** (For details, refer to P.167)
(This brake will be released when it is energized. Do not use this for braking the motor in motion.)

Static friction torque (N·m)	1.6 or more
Engaging time (ms)	50 or less
Releasing time (ms) Note)4	20 or less
Exciting current (DC) (A)	0.36
Releasing voltage (DC) (V)	1 or more
Exciting voltage (DC) (V)	24±2.4

• **Permissible load** (For details, refer to P.166)

During assembly	Radial load P-direction (N)	392
	Thrust load A-direction (N)	147
	Thrust load B-direction (N)	196
During operation	Radial load P-direction (N)	245
	Thrust load A, B-direction (N)	98

• For details of Note)1 to Note)4, refer to P.165.
• Dimensions of Driver, refer to P.47.
*1 □□ in the motor part number represents the motor specifications.
*2 Basic type and RS485 communication type are "Position control type".
Detail of model designation, refer to P.116.
*3 When using a rotary encoder as an incremental system (not using multi-turn data), do not connect a battery for absolute encoder.

Torque characteristics (at AC200 V of power voltage <Dotted line represents the torque at 10 % less supply voltage.>)

Without oil seal

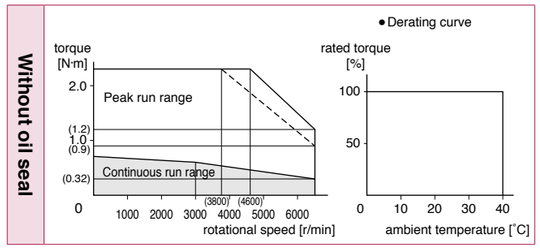

With oil seal

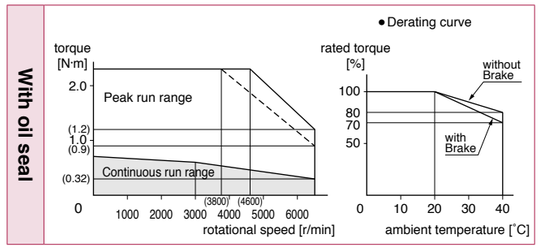

Dimensions

Mass: Without brake: 0.75 kg (0.78 kg with oil seal)
With brake: 1.1 kg (1.2 kg with oil seal)

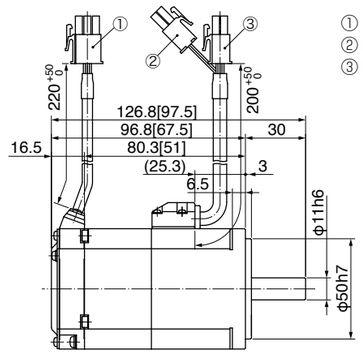

① Encoder connector
② Brake connector
③ Motor connector

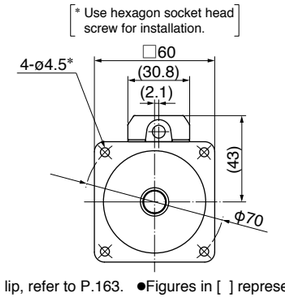

Key way dimensions
<Key way, center tap shaft>

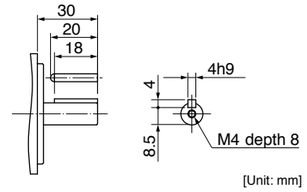

[Unit: mm]

For motors with oil seal, refer to P.161. For motors with protective lip, refer to P.163. ●Figures in [ ] represent the dimensions without brake.

<Cautions> Reduce the moment of inertia ratio if high speed response operation is required.
Dimensions are subject to change without notice. Contact us or a dealer for the latest information.
Read the Instruction Manual carefully and understand all precautions and remarks before using the products.
Please avoid the motor, or equipment containing the motor to be distributed to Japan, or other regions through Japan.

Special Order Product

200 V MHMF 400 W [High inertia 60 mm sq.]

• Please contact us for more information.

Specifications

			AC200 V
Motor model *1	IP65		MHMF042L1□□M
Applicable driver	Model No.	Multifunction type	MBDLT25SF
		RS485 communication type *2	MBDLN25SG
		Basic type *2	MBDLN25SE
	Frame symbol		B-frame
Power supply capacity		(kVA)	0.9
Rated output		(W)	400
Rated torque		(N·m)	1.27
Continuous stall torque		(N·m)	1.40
Momentary Max. peak torque		(N·m)	4.46
Rated current		(A(rms))	2.1
Max. current		(A(o-p))	10.4
Regenerative brake frequency (times/min) Note)1	Without option		No limit Note)2
	DV0P4283		No limit Note)2
Rated rotational speed		(r/min)	3000
Max. rotational speed		(r/min)	6500
Moment of inertia of rotor ($\times 10^{-4}$ kg·m^2)	Without brake		0.56
	With brake		0.58
Recommended moment of inertia ratio of the load and the rotor Note)3			30 times or less
Rotary encoder specifications *3			23-bit Absolute
	Resolution per single turn		8388608

• **Brake specifications** (For details, refer to P.167)
(This brake will be released when it is energized. Do not use this for braking the motor in motion.)

Static friction torque (N·m)	1.6 or more
Engaging time (ms)	50 or less
Releasing time (ms) Note)4	20 or less
Exciting current (DC) (A)	0.36
Releasing voltage (DC) (V)	1 or more
Exciting voltage (DC) (V)	24±2.4

• **Permissible load** (For details, refer to P.166)

During assembly	Radial load P-direction (N)	392
	Thrust load A-direction (N)	147
	Thrust load B-direction (N)	196
During operation	Radial load P-direction (N)	245
	Thrust load A, B-direction (N)	98

• For details of Note)1 to Note)4, refer to P.165.
• Dimensions of Driver, refer to P.47.
*1 □□ in the motor part number represents the motor specifications.
*2 Basic type and RS485 communication type are "Position control type".
Detail of model designation, refer to P.116.
*3 When using a rotary encoder as an incremental system (not using multi-turn data), do not connect a battery for absolute encoder.

Torque characteristics (at AC200 V of power voltage <Dotted line represents the torque at 10 % less supply voltage.>)

Without oil seal

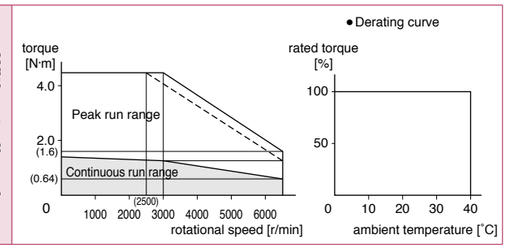

With oil seal

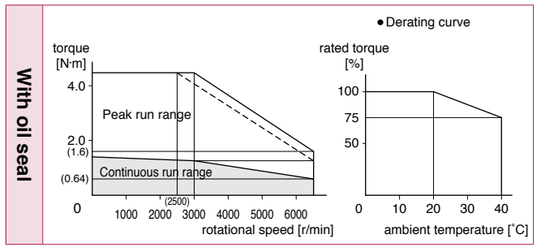

Dimensions

Mass: Without brake: 1.1 kg (1.2 kg with oil seal)
With brake: 1.5 kg (1.6 kg with oil seal)

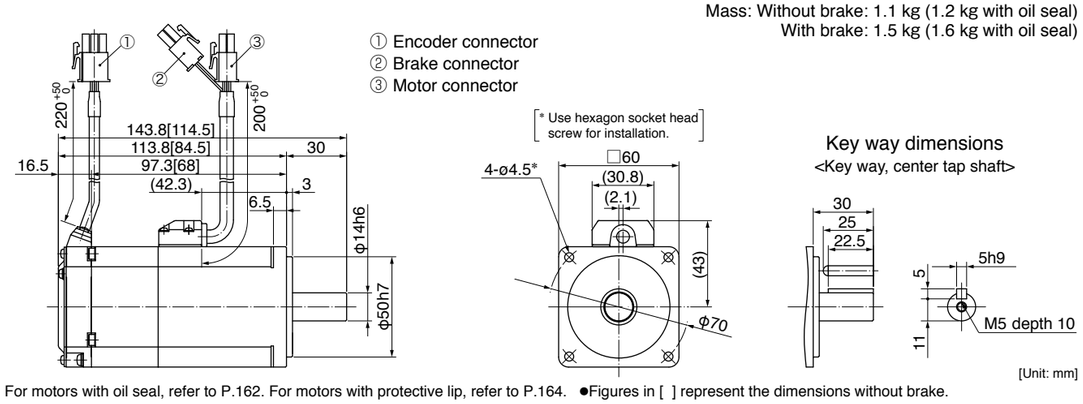

For motors with oil seal, refer to P.162. For motors with protective lip, refer to P.164. ●Figures in [ ] represent the dimensions without brake.

<Cautions> Reduce the moment of inertia ratio if high speed response operation is required.
Dimensions are subject to change without notice. Contact us or a dealer for the latest information.
Read the Instruction Manual carefully and understand all precautions and remarks before using the products.
Please avoid the motor, or equipment containing the motor to be distributed to Japan, or other regions through Japan.

Special Order Product

200 V MHMF 750 W [High inertia 80 mm sq.]

• Please contact us for more information.

Specifications

			AC200 V
Motor model *1	IP65		MHMF082L1□□M
Applicable driver	Model No.	Multifunction type	MCDLT35SF
		RS485 communication type *2	MCDLN35SG
		Basic type *2	MCDLN35SE
	Frame symbol		C-frame
Power supply capacity		(kVA)	1.3
Rated output		(W)	750
Rated torque		(N·m)	2.39
Continuous stall torque		(N·m)	2.86
Momentary Max. peak torque		(N·m)	8.36
Rated current		(A(rms))	3.8
Max. current		(A(o-p))	18.8
Regenerative brake frequency (times/min) Note)1	Without option		No limit Note)2
	DV0P4283		No limit Note)2
Rated rotational speed		(r/min)	3000
Max. rotational speed		(r/min)	6000
Moment of inertia of rotor ($\times 10^{-4}$ kg·m^2)	Without brake		1.56
	With brake		1.66
Recommended moment of inertia ratio of the load and the rotor Note)3			20 times or less
Rotary encoder specifications *3			23-bit Absolute
	Resolution per single turn		8388608

• **Brake specifications** (For details, refer to P.167)
(This brake will be released when it is energized. Do not use this for braking the motor in motion.)

Static friction torque (N·m)	3.8 or more
Engaging time (ms)	70 or less
Releasing time (ms) Note)4	20 or less
Exciting current (DC) (A)	0.42
Releasing voltage (DC) (V)	1 or more
Exciting voltage (DC) (V)	24±2.4

• **Permissible load** (For details, refer to P.166)

During assembly	Radial load P-direction (N)	686
	Thrust load A-direction (N)	294
	Thrust load B-direction (N)	392
During operation	Radial load P-direction (N)	392
	Thrust load A, B-direction (N)	147

• For details of Note)1 to Note)4, refer to P.165.
• Dimensions of Driver, refer to P.48.
*1 □□ in the motor part number represents the motor specifications.
*2 Basic type and RS485 communication type are "Position control type".
Detail of model designation, refer to P.116.
*3 When using a rotary encoder as an incremental system (not using multi-turn data), do not connect a battery for absolute encoder.

Torque characteristics (at AC200 V of power voltage <Dotted line represents the torque at 10 % less supply voltage.>)

Without oil seal

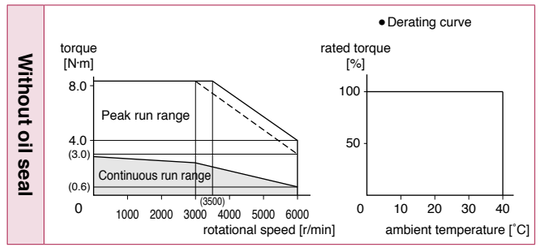

With oil seal

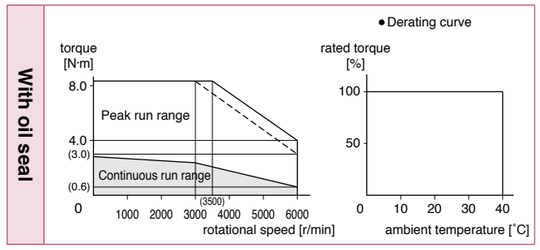

Dimensions

Mass: Without brake: 2.2 kg (2.3 kg with oil seal)
With brake: 2.9 kg (3.0 kg with oil seal)

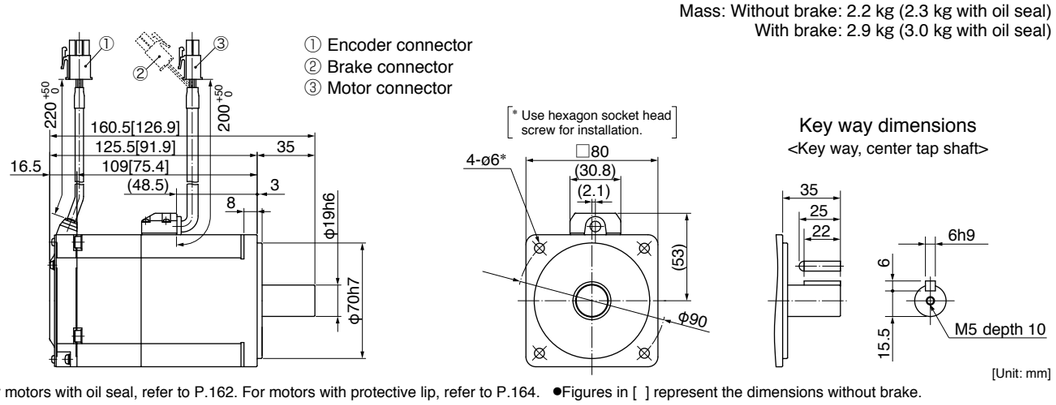

For motors with oil seal, refer to P.162. For motors with protective lip, refer to P.164. ●Figures in [ ] represent the dimensions without brake.

<Cautions> Reduce the moment of inertia ratio if high speed response operation is required.
Dimensions are subject to change without notice. Contact us or a dealer for the latest information.
Read the Instruction Manual carefully and understand all precautions and remarks before using the products.
Please avoid the motor, or equipment containing the motor to be distributed to Japan, or other regions through Japan.

Special Order Product

200 V MHMF 1000 W [High inertia 80 mm sq.]

• Please contact us for more information.

Specifications

			AC200 V
Motor model *1	IP65		MHMF092L1□□M
Applicable driver	Model No.	Multifunction type	MDDLT55SF
		RS485 communication type *2	MDDLN55SG
		Basic type *2	MDDLN55SE
	Frame symbol		D-frame
Power supply capacity		(kVA)	2.3
Rated output		(W)	1000
Rated torque		(N·m)	3.18
Continuous stall torque		(N·m)	3.34
Momentary Max. peak torque		(N·m)	11.1
Rated current		(A(rms))	5.7
Max. current		(A(o-p))	28.2
Regenerative brake frequency (times/min) Note)1	Without option		No limit Note)2
	DV0P4284		No limit Note)2
Rated rotational speed		(r/min)	3000
Max. rotational speed		(r/min)	6000
Moment of inertia of rotor ($\times 10^{-4}$ kg·m^2)	Without brake		2.03
	With brake		2.13
Recommended moment of inertia ratio of the load and the rotor Note)3			20 times or less
Rotary encoder specifications *3			23-bit Absolute
	Resolution per single turn		8388608

• **Brake specifications** (For details, refer to P.167)
(This brake will be released when it is energized. Do not use this for braking the motor in motion.)

Static friction torque (N·m)	3.8 or more
Engaging time (ms)	70 or less
Releasing time (ms) Note)4	20 or less
Exciting current (DC) (A)	0.42
Releasing voltage (DC) (V)	1 or more
Exciting voltage (DC) (V)	24±2.4

• **Permissible load** (For details, refer to P.166)

During assembly	Radial load P-direction (N)	686
	Thrust load A-direction (N)	294
	Thrust load B-direction (N)	392
During operation	Radial load P-direction (N)	392
	Thrust load A, B-direction (N)	147

• For details of Note)1 to Note)4, refer to P.165.
• Dimensions of Driver, refer to P.48.
*1 □□ in the motor part number represents the motor specifications.
*2 Basic type and RS485 communication type are "Position control type".
Detail of model designation, refer to P.116.
*3 When using a rotary encoder as an incremental system (not using multi-turn data), do not connect a battery for absolute encoder.

Torque characteristics (at AC200 V of power voltage <Dotted line represents the torque at 10 % less supply voltage.>)

Without oil seal

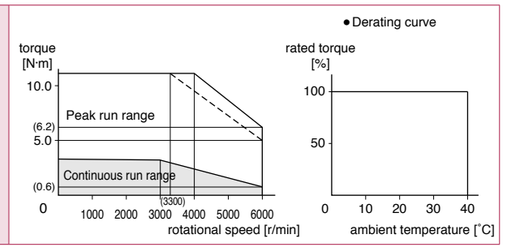

With oil seal

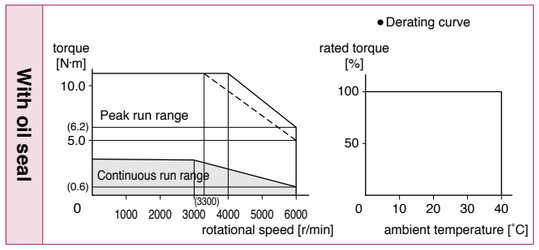

Dimensions

Mass: Without brake: 2.7 kg (2.8 kg with oil seal)
With brake: 3.4 kg (3.5 kg with oil seal)

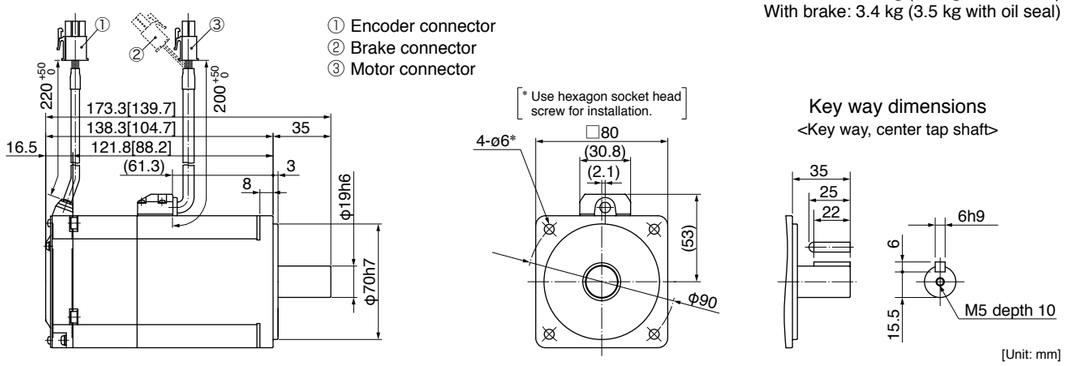

For motors with oil seal, refer to P.162. For motors with protective lip, refer to P.164. ●Figures in [ ] represent the dimensions without brake.

<Cautions> Reduce the moment of inertia ratio if high speed response operation is required.
Dimensions are subject to change without notice. Contact us or a dealer for the latest information.
Read the Instruction Manual carefully and understand all precautions and remarks before using the products.
Please avoid the motor, or equipment containing the motor to be distributed to Japan, or other regions through Japan.

Special Order Product

200 V MHMF 1.0 kW [High inertia 130 mm sq.]

• Please contact us for more information.

Specifications

			AC200 V
Motor model *1	IP67		MHMF102L1□□M
Applicable driver	Model No.	Multifunction type	MDDLT45SF
		RS485 communication type *2	MDDLN45SG
		Basic type *2	MDDLN45SE
	Frame symbol		D-frame
Power supply capacity		(kVA)	1.8
Rated output		(W)	1000
Rated torque		(N·m)	4.77
Continuous stall torque		(N·m)	5.25
Momentary Max. peak torque		(N·m)	14.3
Rated current		(A(rms))	5.2
Max. current		(A(o-p))	22
Regenerative brake frequency (times/min) Note)1	Without option		No limit Note)2
	DV0P4284		No limit Note)2
Rated rotational speed		(r/min)	2000
Max. rotational speed		(r/min)	3000
Moment of inertia of rotor ($\times 10^{-4}$ kg·m^2)	Without brake		22.9
	With brake		24.1
Recommended moment of inertia ratio of the load and the rotor Note)3			5 times or less
Rotary encoder specifications *3			23-bit Absolute
	Resolution per single turn		8388608

• **Brake specifications** (For details, refer to P.167)
(This brake will be released when it is energized. Do not use this for braking the motor in motion.)

Static friction torque (N·m)	13.7 or more
Engaging time (ms)	100 or less
Releasing time (ms) Note)4	50 or less
Exciting current (DC) (A)	0.79±10 %
Releasing voltage (DC) (V)	2 or more
Exciting voltage (DC) (V)	24±2.4

• **Permissible load** (For details, refer to P.166)

During assembly	Radial load P-direction (N)	980
	Thrust load A-direction (N)	588
	Thrust load B-direction (N)	686
During operation	Radial load P-direction (N)	490
	Thrust load A, B-direction (N)	196

• For details of Note)1 to Note)4, refer to P.165.
• Dimensions of Driver, refer to P.48.
*1 □□ in the motor part number represents the motor specifications.
*2 Basic type and RS485 communication type are "Position control type".
Detail of model designation, refer to P.116.
*3 When using a rotary encoder as an incremental system (not using multi-turn data), do not connect a battery for absolute encoder.

Torque characteristics (at AC200 V of power voltage <Dotted line represents the torque at 10 % less supply voltage.>)

With oil seal

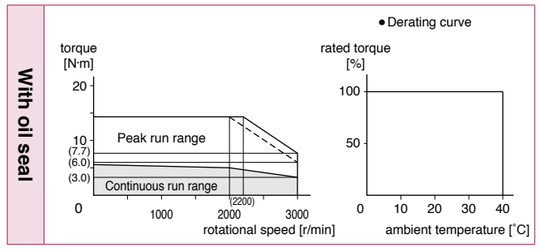

Dimensions

Mass: Without brake: 6.1 kg
With brake: 7.6 kg

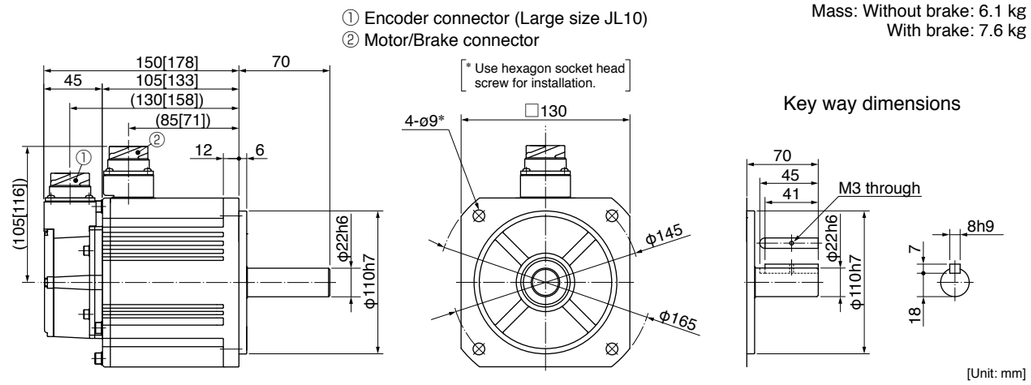

● Figures in [ ] represent the dimensions with brake.

<Cautions> Reduce the moment of inertia ratio if high speed response operation is required.
Dimensions are subject to change without notice. Contact us or a dealer for the latest information.
Read the Instruction Manual carefully and understand all precautions and remarks before using the products.
Please avoid the motor, or equipment containing the motor to be distributed to Japan, or other regions through Japan.

Special Order Product

200 V MHMF 1.5 kW [High inertia 130 mm sq.]

• Please contact us for more information.

Specifications

			AC200 V
Motor model *1	IP67		MHMF152L1□□M
Applicable driver	Model No.	Multifunction type	MDDLT55SF
		RS485 communication type *2	MDDLN55SG
		Basic type *2	MDDLN55SE
	Frame symbol		D-frame
Power supply capacity		(kVA)	2.3
Rated output		(W)	1500
Rated torque		(N·m)	7.16
Continuous stall torque		(N·m)	7.52
Momentary Max. peak torque		(N·m)	21.5
Rated current		(A(rms))	8.0
Max. current		(A(o-p))	34
Regenerative brake frequency (times/min) Note)1	Without option		No limit Note)2
	DV0P4284		No limit Note)2
Rated rotational speed		(r/min)	2000
Max. rotational speed		(r/min)	3000
Moment of inertia of rotor ($\times 10^{-4}$ kg·m^2)	Without brake		33.4
	With brake		34.6
Recommended moment of inertia ratio of the load and the rotor Note)3			5 times or less
Rotary encoder specifications *3			23-bit Absolute
	Resolution per single turn		8388608

• **Brake specifications** (For details, refer to P.167)
(This brake will be released when it is energized. Do not use this for braking the motor in motion.)

Static friction torque (N·m)	13.7 or more
Engaging time (ms)	100 or less
Releasing time (ms) Note)4	50 or less
Exciting current (DC) (A)	0.79±10 %
Releasing voltage (DC) (V)	2 or more
Exciting voltage (DC) (V)	24±2.4

• **Permissible load** (For details, refer to P.166)

During assembly	Radial load P-direction (N)	980
	Thrust load A-direction (N)	588
	Thrust load B-direction (N)	686
During operation	Radial load P-direction (N)	490
	Thrust load A, B-direction (N)	196

• For details of Note)1 to Note)4, refer to P.165.
• Dimensions of Driver, refer to P.48.
*1 □□ in the motor part number represents the motor specifications.
*2 Basic type and RS485 communication type are "Position control type".
Detail of model designation, refer to P.116.
*3 When using a rotary encoder as an incremental system (not using multi-turn data), do not connect a battery for absolute encoder.

Torque characteristics (at AC200 V of power voltage <Dotted line represents the torque at 10 % less supply voltage.>)

With oil seal

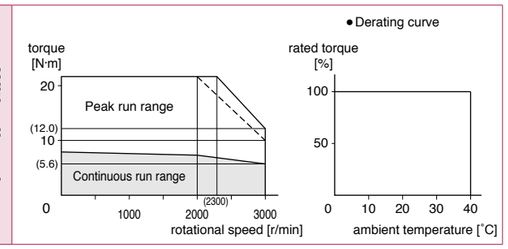

Dimensions

Mass: Without brake: 7.7 kg
With brake: 9.2 kg

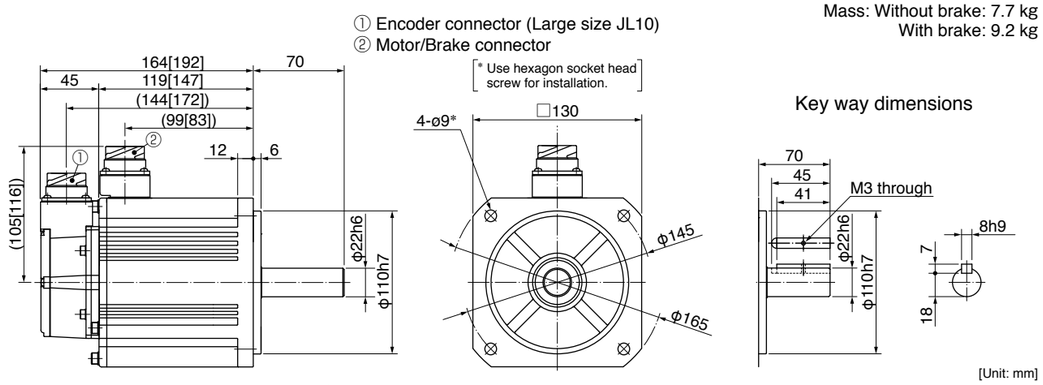

● Figures in [ ] represent the dimensions with brake.

<Cautions> Reduce the moment of inertia ratio if high speed response operation is required.
Dimensions are subject to change without notice. Contact us or a dealer for the latest information.
Read the Instruction Manual carefully and understand all precautions and remarks before using the products.
Please avoid the motor, or equipment containing the motor to be distributed to Japan, or other regions through Japan.

Special Order Product

200 V MHMF 2.0 kW [High inertia 176 mm sq.]

• Please contact us for more information.

Specifications

			AC200 V
Motor model *1	IP67		MHMF202L1□□M
Applicable driver	Model No.	Multifunction type	MEDLT83SF
		RS485 communication type *2	MEDLN83SG
		Basic type *2	MEDLN83SE
	Frame symbol		E-frame
Power supply capacity		(kVA)	3.8
Rated output		(W)	2000
Rated torque		(N·m)	9.55
Continuous stall torque		(N·m)	11.5
Momentary Max. peak torque		(N·m)	28.6
Rated current		(A(rms))	12.5
Max. current		(A(o-p))	53
Regenerative brake frequency (times/min) Note)1	Without option		No limit Note)2
	DV0P4285		No limit Note)2
Rated rotational speed		(r/min)	2000
Max. rotational speed		(r/min)	3000
Moment of inertia of rotor ($\times 10^{-4}$ kg·m^2)	Without brake		55.7
	With brake		61.0
Recommended moment of inertia ratio of the load and the rotor Note)3			5 times or less
Rotary encoder specifications *3			23-bit Absolute
	Resolution per single turn		8388608

• **Brake specifications** (For details, refer to P.167)
(This brake will be released when it is energized. Do not use this for braking the motor in motion.)

Static friction torque (N·m)	25.0 or more
Engaging time (ms)	80 or less
Releasing time (ms) Note)4	25 or less
Exciting current (DC) (A)	1.29±10 %
Releasing voltage (DC) (V)	2 or more
Exciting voltage (DC) (V)	24±2.4

• **Permissible load** (For details, refer to P.166)

During assembly	Radial load P-direction (N)	1666
	Thrust load A-direction (N)	784
	Thrust load B-direction (N)	980
During operation	Radial load P-direction (N)	784
	Thrust load A, B-direction (N)	343

• For details of Note)1 to Note)4, refer to P.165.
• Dimensions of Driver, refer to P.49.
*1 □□ in the motor part number represents the motor specifications.
*2 Basic type and RS485 communication type are "Position control type".
Detail of model designation, refer to P.116.
*3 When using a rotary encoder as an incremental system (not using multi-turn data), do not connect a battery for absolute encoder.

Torque characteristics (at AC200 V of power voltage <Dotted line represents the torque at 10 % less supply voltage.>)

With oil seal

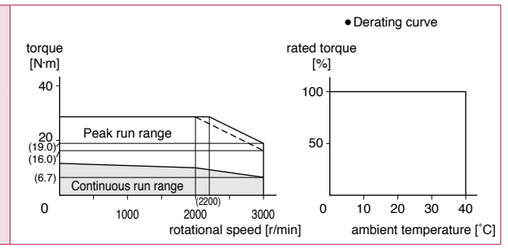

Dimensions

Mass: Without brake: 11.3 kg
With brake: 14.6 kg

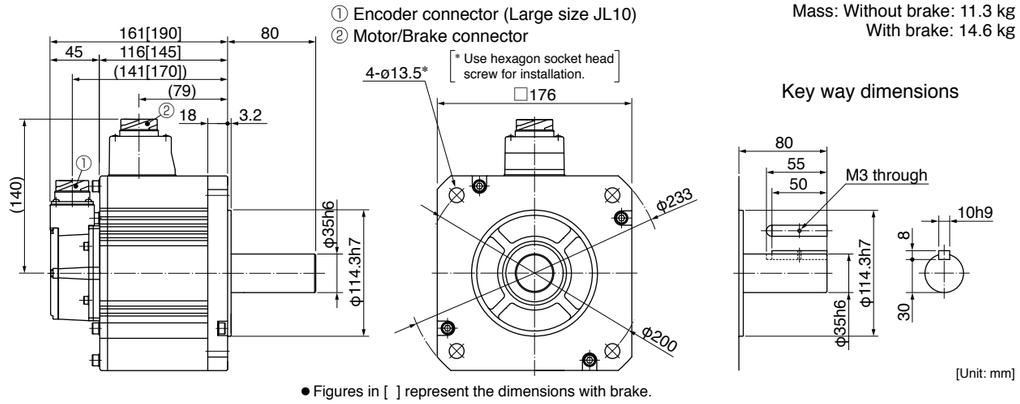

● Figures in [ ] represent the dimensions with brake.

<Cautions> Reduce the moment of inertia ratio if high speed response operation is required.
Dimensions are subject to change without notice. Contact us or a dealer for the latest information.
Read the Instruction Manual carefully and understand all precautions and remarks before using the products.
Please avoid the motor, or equipment containing the motor to be distributed to Japan, or other regions through Japan.

Special Order Product

200 V MHMF 3.0 kW [High inertia 176 mm sq.]

• Please contact us for more information.

Specifications

			AC200 V
Motor model *1	IP67		MHMF302L1□□M
Applicable driver	Model No.	Multifunction type	MFDLTA3SF
		RS485 communication type *2	MFDLNA3SG
		Basic type *2	MFDLNA3SE
	Frame symbol		F-frame
Power supply capacity		(kVA)	4.5
Rated output		(W)	3000
Rated torque		(N·m)	14.3
Continuous stall torque		(N·m)	17.2
Momentary Max. peak torque		(N·m)	43.0
Rated current		(A(rms))	17.0
Max. current		(A(o-p))	72
Regenerative brake frequency (times/min) Note)1	Without option		No limit Note)2
	DV0P4285×2		No limit Note)2
Rated rotational speed		(r/min)	2000
Max. rotational speed		(r/min)	3000
Moment of inertia of rotor ($\times 10^{-4}$ kg·m^2)	Without brake		85.3
	With brake		90.7
Recommended moment of inertia ratio of the load and the rotor Note)3			5 times or less
Rotary encoder specifications *3			23-bit Absolute
	Resolution per single turn		8388608

• **Brake specifications** (For details, refer to P.167)

(This brake will be released when it is energized. Do not use this for braking the motor in motion.)

Static friction torque (N·m)	25.0 or more
Engaging time (ms)	80 or less
Releasing time (ms) Note)4	25 or less
Exciting current (DC) (A)	1.29±10 %
Releasing voltage (DC) (V)	2 or more
Exciting voltage (DC) (V)	24±2.4

• **Permissible load** (For details, refer to P.166)

During assembly	Radial load P-direction (N)	1666
	Thrust load A-direction (N)	784
	Thrust load B-direction (N)	980
During operation	Radial load P-direction (N)	784
	Thrust load A, B-direction (N)	343

• For details of Note)1 to Note)4, refer to P.165.
• Dimensions of Driver, refer to P.49.
*1 □□ in the motor part number represents the motor specifications.
*2 Basic type and RS485 communication type are "Position control type".
Detail of model designation, refer to P.116.
*3 When using a rotary encoder as an incremental system (not using multi-turn data), do not connect a battery for absolute encoder.

Torque characteristics (at AC200 V of power voltage <Dotted line represents the torque at 10 % less supply voltage.>)

With oil seal

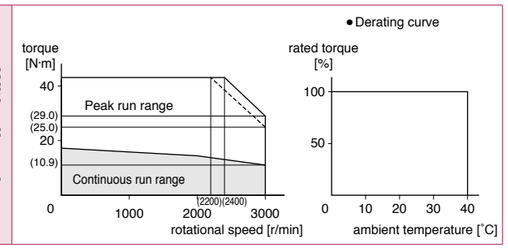

Dimensions

Mass: Without brake: 13.8 kg
With brake: 17.2 kg

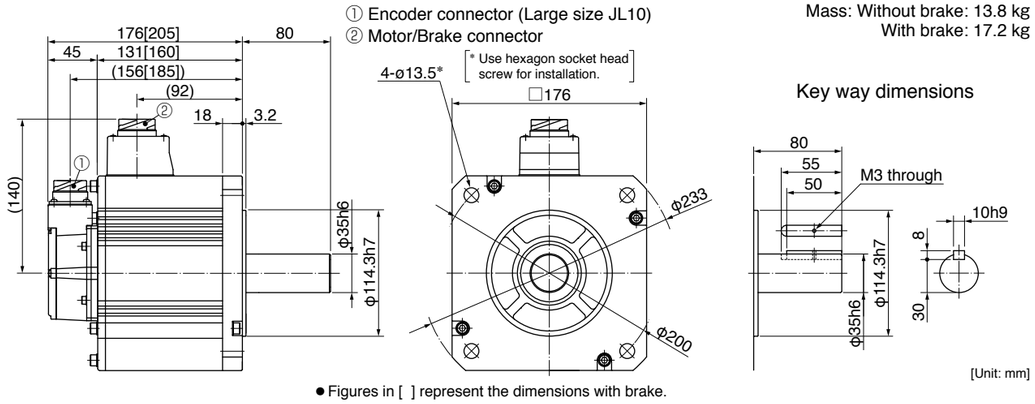

● Figures in [ ] represent the dimensions with brake.

<Cautions> Reduce the moment of inertia ratio if high speed response operation is required.
Dimensions are subject to change without notice. Contact us or a dealer for the latest information.
Read the Instruction Manual carefully and understand all precautions and remarks before using the products.
Please avoid the motor, or equipment containing the motor to be distributed to Japan, or other regions through Japan.

Special Order Product

200 V MHMF 4.0 kW [High inertia 176 mm sq.]

• Please contact us for more information.

Specifications

			AC200 V
Motor model *1	IP67		MHMF402L1□□M
Applicable driver	Model No.	Multifunction type	MFDLTB3SF
		RS485 communication type *2	MFDLNB3SG
		Basic type *2	MFDLNB3SE
	Frame symbol		F-frame
Power supply capacity		(kVA)	7.5
Rated output		(W)	4000
Rated torque		(N·m)	19.1
Continuous stall torque		(N·m)	22.0
Momentary Max. peak torque		(N·m)	57.3
Rated current		(A(rms))	20
Max. current		(A(o-p))	85
Regenerative brake frequency (times/min) Note)1	Without option		No limit Note)2
	DV0P4285×2		No limit Note)2
Rated rotational speed		(r/min)	2000
Max. rotational speed		(r/min)	3000
Moment of inertia of rotor ($\times 10^{-4}$ kg·m^2)	Without brake		104
	With brake		110
Recommended moment of inertia ratio of the load and the rotor Note)3			5 times or less
Rotary encoder specifications *3			23-bit Absolute
	Resolution per single turn		8388608

• **Brake specifications** (For details, refer to P.167)

(This brake will be released when it is energized. Do not use this for braking the motor in motion.)

Static friction torque (N·m)	25.0 or more
Engaging time (ms)	80 or less
Releasing time (ms) Note)4	25 or less
Exciting current (DC) (A)	1.29±10 %
Releasing voltage (DC) (V)	2 or more
Exciting voltage (DC) (V)	24±2.4

• **Permissible load** (For details, refer to P.166)

During assembly	Radial load P-direction (N)	1666
	Thrust load A-direction (N)	784
	Thrust load B-direction (N)	980
During operation	Radial load P-direction (N)	784
	Thrust load A, B-direction (N)	343

• For details of Note)1 to Note)4, refer to P.165.
• Dimensions of Driver, refer to P.49.
*1 □□ in the motor part number represents the motor specifications.
*2 Basic type and RS485 communication type are "Position control type".
Detail of model designation, refer to P.116.
*3 When using a rotary encoder as an incremental system (not using multi-turn data), do not connect a battery for absolute encoder.

Torque characteristics (at AC200 V of power voltage <Dotted line represents the torque at 10 % less supply voltage.>)

With oil seal

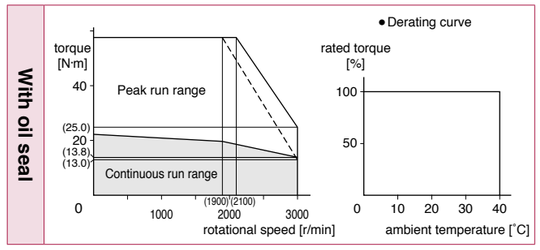

Dimensions

Mass: Without brake: 16.2 kg
With brake: 19.4 kg

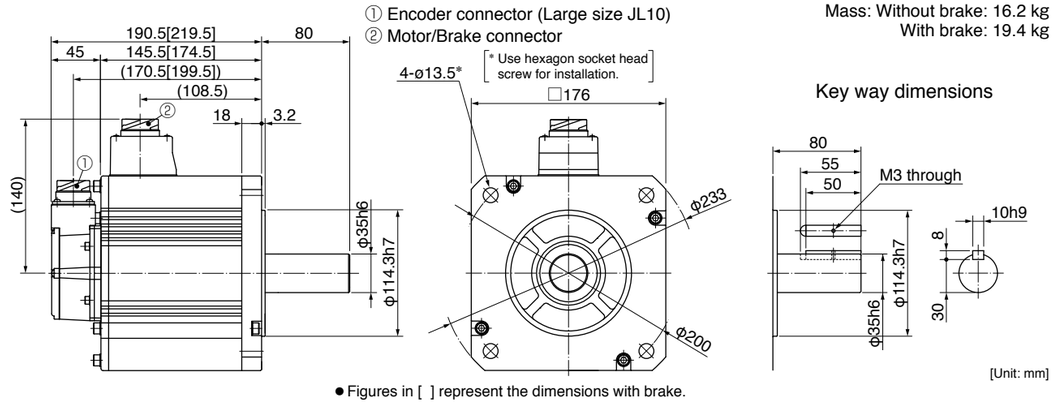

● Figures in [ ] represent the dimensions with brake.

<Cautions> Reduce the moment of inertia ratio if high speed response operation is required.
Dimensions are subject to change without notice. Contact us or a dealer for the latest information.
Read the Instruction Manual carefully and understand all precautions and remarks before using the products.
Please avoid the motor, or equipment containing the motor to be distributed to Japan, or other regions through Japan.

Special Order Product

200 V MHMF 5.0 kW [High inertia 176 mm sq.]

• Please contact us for more information.

Specifications

			AC200 V
Motor model *1	IP67		MHMF502L1□□M
Applicable driver	Model No.	Multifunction type	MFDLTB3SF
		RS485 communication type *2	MFDLNB3SG
		Basic type *2	MFDLNB3SE
	Frame symbol		F-frame
Power supply capacity		(kVA)	7.5
Rated output		(W)	5000
Rated torque		(N·m)	23.9
Continuous stall torque		(N·m)	26.3
Momentary Max. peak torque		(N·m)	71.6
Rated current		(A(rms))	23.3
Max. current		(A(o-p))	99
Regenerative brake frequency (times/min) Note)1	Without option		No limit Note)2
	DV0P4285×2		No limit Note)2
Rated rotational speed		(r/min)	2000
Max. rotational speed		(r/min)	3000
Moment of inertia of rotor ($\times 10^{-4}$ kg·m^2)	Without brake		146
	With brake		151
Recommended moment of inertia ratio of the load and the rotor Note)3			5 times or less
Rotary encoder specifications *3			23-bit Absolute
	Resolution per single turn		8388608

• **Brake specifications** (For details, refer to P.167)
(This brake will be released when it is energized. Do not use this for braking the motor in motion.)

Static friction torque (N·m)	44.1 or more
Engaging time (ms)	150 or less
Releasing time (ms) Note)4	30 or less
Exciting current (DC) (A)	1.29±10 %
Releasing voltage (DC) (V)	2 or more
Exciting voltage (DC) (V)	24±2.4

• **Permissible load** (For details, refer to P.166)

During assembly	Radial load P-direction (N)	1666
	Thrust load A-direction (N)	784
	Thrust load B-direction (N)	980
During operation	Radial load P-direction (N)	784
	Thrust load A, B-direction (N)	343

• For details of Note)1 to Note)4, refer to P.165.
• Dimensions of Driver, refer to P.49.
*1 □□ in the motor part number represents the motor specifications.
*2 Basic type and RS485 communication type are "Position control type".
Detail of model designation, refer to P.116.
*3 When using a rotary encoder as an incremental system (not using multi-turn data), do not connect a battery for absolute encoder.

Torque characteristics (at AC200 V of power voltage <Dotted line represents the torque at 10 % less supply voltage.>)

With oil seal

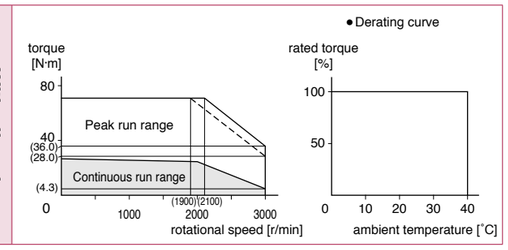

Dimensions

Mass: Without brake: 19.6 kg
With brake: 22.8 kg

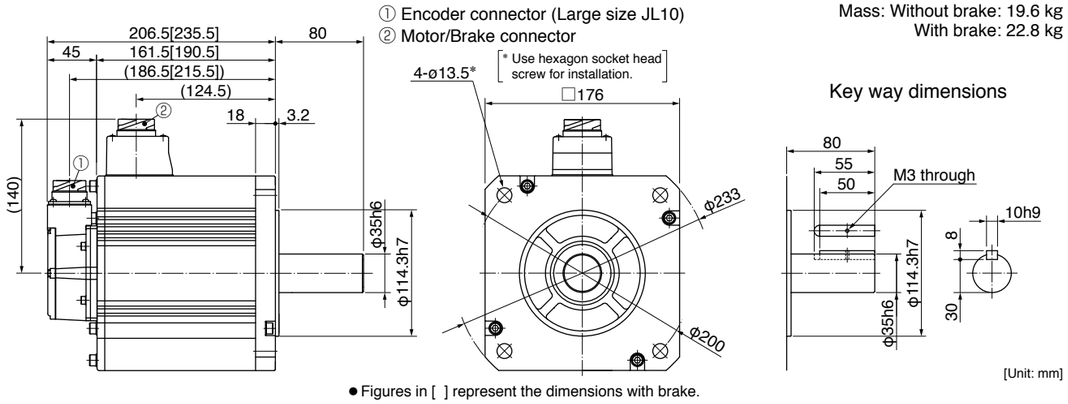

● Figures in [ ] represent the dimensions with brake.

<Cautions> Reduce the moment of inertia ratio if high speed response operation is required.
Dimensions are subject to change without notice. Contact us or a dealer for the latest information.
Read the Instruction Manual carefully and understand all precautions and remarks before using the products.
Please avoid the motor, or equipment containing the motor to be distributed to Japan, or other regions through Japan.

Special Order Product

200 V MDMF 1.0 kW [Middle inertia 130 mm sq.]

• Please contact us for more information.

Specifications

			AC200 V
Motor model *1	IP67		MDMF102L1□□M
Applicable driver	Model No.	Multifunction type	MDDLT45SF
		RS485 communication type *2	MDDLN45SG
		Basic type *2	MDDLN45SE
	Frame symbol		D-frame
Power supply capacity		(kVA)	1.8
Rated output		(W)	1000
Rated torque		(N·m)	4.77
Continuous stall torque		(N·m)	5.25
Momentary Max. peak torque		(N·m)	14.3
Rated current		(A(rms))	5.2
Max. current		(A(o-p))	22
Regenerative brake frequency (times/min) Note)1	Without option		No limit Note)2
	DV0P4284		No limit Note)2
Rated rotational speed		(r/min)	2000
Max. rotational speed		(r/min)	3000
Moment of inertia of rotor ($\times 10^{-4}$ kg·m^2)	Without brake		6.18
	With brake		7.40
Recommended moment of inertia ratio of the load and the rotor Note)3			10 times or less
Rotary encoder specifications *3			23-bit Absolute
	Resolution per single turn		8388608

• **Brake specifications** (For details, refer to P.167)
(This brake will be released when it is energized. Do not use this for braking the motor in motion.)

Static friction torque (N·m)	13.7 or more
Engaging time (ms)	100 or less
Releasing time (ms) Note)4	50 or less
Exciting current (DC) (A)	0.79±10 %
Releasing voltage (DC) (V)	2 or more
Exciting voltage (DC) (V)	24±2.4

• **Permissible load** (For details, refer to P.166)

During assembly	Radial load P-direction (N)	980
	Thrust load A-direction (N)	588
	Thrust load B-direction (N)	686
During operation	Radial load P-direction (N)	490
	Thrust load A, B-direction (N)	196

• For details of Note)1 to Note)4, refer to P.165.
• Dimensions of Driver, refer to P.48.
*1 □□ in the motor part number represents the motor specifications.
*2 Basic type and RS485 communication type are "Position control type".
Detail of model designation, refer to P.116.
*3 When using a rotary encoder as an incremental system (not using multi-turn data), do not connect a battery for absolute encoder.

Torque characteristics (at AC200 V of power voltage <Dotted line represents the torque at 10 % less supply voltage.>)

With oil seal

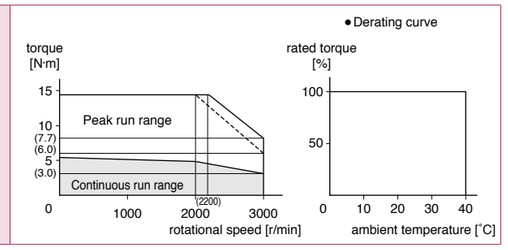

Dimensions

Mass: Without brake: 4.6 kg
With brake: 6.1 kg

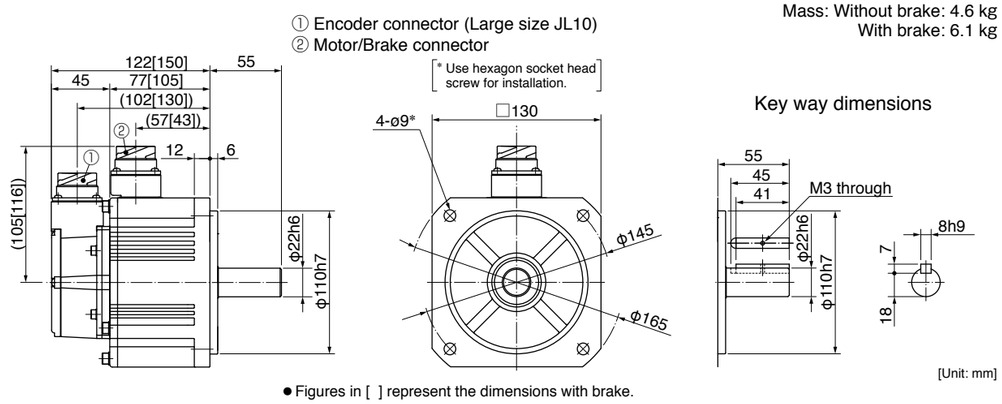

● Figures in [ ] represent the dimensions with brake.

<Cautions> Reduce the moment of inertia ratio if high speed response operation is required.
Dimensions are subject to change without notice. Contact us or a dealer for the latest information.
Read the Instruction Manual carefully and understand all precautions and remarks before using the products.
Please avoid the motor, or equipment containing the motor to be distributed to Japan, or other regions through Japan.

Special Order Product

200 V MDMF 1.5 kW [Middle inertia 130 mm sq.]

• Please contact us for more information.

Specifications

			AC200 V
Motor model *1	IP67		MDMF152L1□□M
Applicable driver	Model No.	Multifunction type	MDDLT55SF
		RS485 communication type *2	MDDLN55SG
		Basic type *2	MDDLN55SE
	Frame symbol		D-frame
Power supply capacity		(kVA)	2.3
Rated output		(W)	1500
Rated torque		(N·m)	7.16
Continuous stall torque		(N·m)	7.52
Momentary Max. peak torque		(N·m)	21.5
Rated current		(A(rms))	8.0
Max. current		(A(o-p))	34
Regenerative brake frequency (times/min) Note)1	Without option		No limit Note)2
	DV0P4284		No limit Note)2
Rated rotational speed		(r/min)	2000
Max. rotational speed		(r/min)	3000
Moment of inertia of rotor ($\times 10^{-4}$ kg·m^2)	Without brake		9.16
	With brake		10.4
Recommended moment of inertia ratio of the load and the rotor Note)3			10 times or less
Rotary encoder specifications *3			23-bit Absolute
	Resolution per single turn		8388608

• **Brake specifications** (For details, refer to P.167)
(This brake will be released when it is energized. Do not use this for braking the motor in motion.)

Static friction torque (N·m)	13.7 or more
Engaging time (ms)	100 or less
Releasing time (ms) Note)4	50 or less
Exciting current (DC) (A)	0.79±10 %
Releasing voltage (DC) (V)	2 or more
Exciting voltage (DC) (V)	24±2.4

• **Permissible load** (For details, refer to P.166)

During assembly	Radial load P-direction (N)	980
	Thrust load A-direction (N)	588
	Thrust load B-direction (N)	686
During operation	Radial load P-direction (N)	490
	Thrust load A, B-direction (N)	196

• For details of Note)1 to Note)4, refer to P.165.
• Dimensions of Driver, refer to P.48.
*1 □□ in the motor part number represents the motor specifications.
*2 Basic type and RS485 communication type are "Position control type".
Detail of model designation, refer to P.116.
*3 When using a rotary encoder as an incremental system (not using multi-turn data), do not connect a battery for absolute encoder.

Torque characteristics (at AC200 V of power voltage <Dotted line represents the torque at 10 % less supply voltage.>)

With oil seal

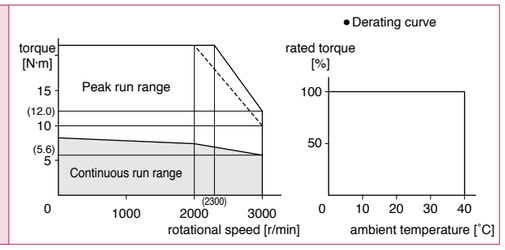

Dimensions

Mass: Without brake: 5.7 kg
With brake: 7.2 kg

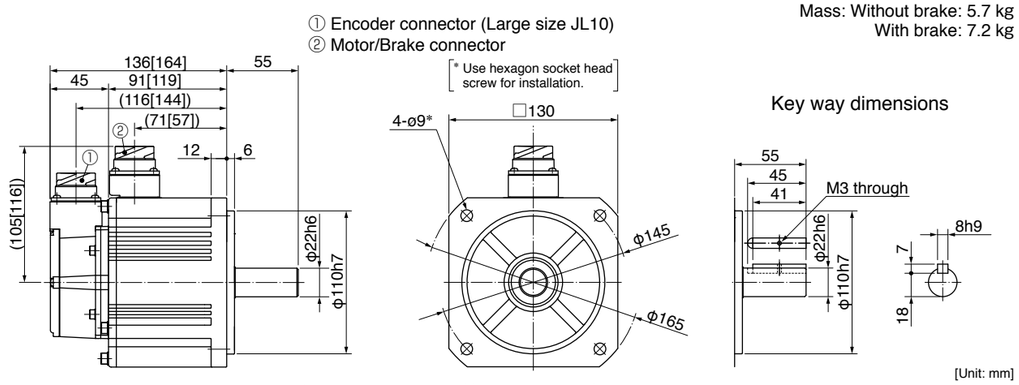

● Figures in [ ] represent the dimensions with brake.

<Cautions> Reduce the moment of inertia ratio if high speed response operation is required.
Dimensions are subject to change without notice. Contact us or a dealer for the latest information.
Read the Instruction Manual carefully and understand all precautions and remarks before using the products.
Please avoid the motor, or equipment containing the motor to be distributed to Japan, or other regions through Japan.

Special Order Product

200 V MDMF 2.0 kW [Middle inertia 130 mm sq.]

• Please contact us for more information.

Specifications

			AC200 V
Motor model *1	IP67		MDMF202L1□□M
Applicable driver	Model No.	Multifunction type	MEDLT83SF
		RS485 communication type *2	MEDLN83SG
		Basic type *2	MEDLN83SE
	Frame symbol		E-frame
Power supply capacity		(kVA)	3.8
Rated output		(W)	2000
Rated torque		(N·m)	9.55
Continuous stall torque		(N·m)	10.0
Momentary Max. peak torque		(N·m)	28.6
Rated current		(A(rms))	9.9
Max. current		(A(o-p))	42
Regenerative brake frequency (times/min) Note)1	Without option		No limit Note)2
	DV0P4285		No limit Note)2
Rated rotational speed		(r/min)	2000
Max. rotational speed		(r/min)	3000
Moment of inertia of rotor ($\times 10^{-4}$ kg·m^2)	Without brake		12.1
	With brake		13.3
Recommended moment of inertia ratio of the load and the rotor Note)3			10 times or less
Rotary encoder specifications *3			23-bit Absolute
	Resolution per single turn		8388608

• **Brake specifications** (For details, refer to P.167)
(This brake will be released when it is energized. Do not use this for braking the motor in motion.)

Static friction torque (N·m)	13.7 or more
Engaging time (ms)	100 or less
Releasing time (ms) Note)4	50 or less
Exciting current (DC) (A)	0.79±10 %
Releasing voltage (DC) (V)	2 or more
Exciting voltage (DC) (V)	24±2.4

• **Permissible load** (For details, refer to P.166)

During assembly	Radial load P-direction (N)	980
	Thrust load A-direction (N)	588
	Thrust load B-direction (N)	686
During operation	Radial load P-direction (N)	490
	Thrust load A, B-direction (N)	196

• For details of Note)1 to Note)4, refer to P.165.
• Dimensions of Driver, refer to P.49.
*1 □□ in the motor part number represents the motor specifications.
*2 Basic type and RS485 communication type are "Position control type".
Detail of model designation, refer to P.116.
*3 When using a rotary encoder as an incremental system (not using multi-turn data), do not connect a battery for absolute encoder.

Torque characteristics (at AC200 V of power voltage <Dotted line represents the torque at 10 % less supply voltage.>)

With oil seal

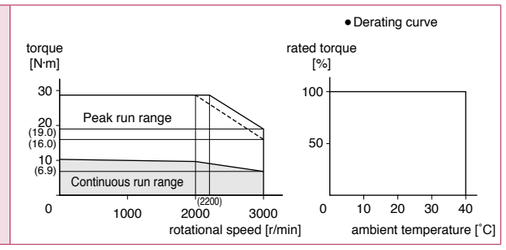

Dimensions

Mass: Without brake: 6.9 kg
With brake: 8.4 kg

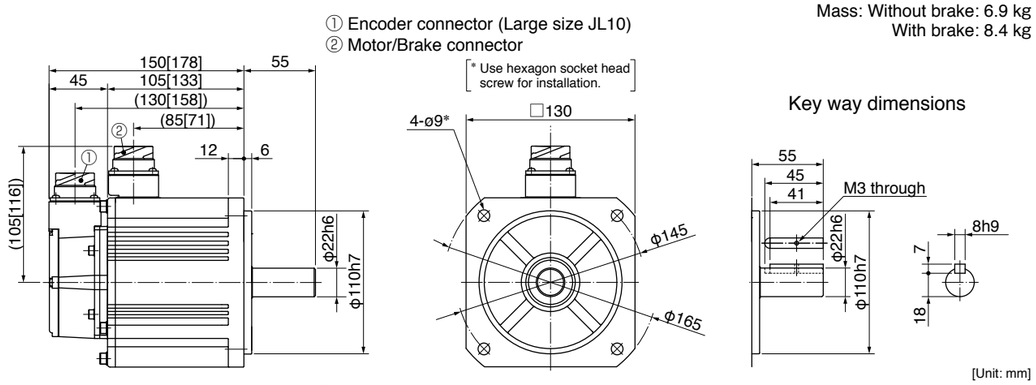

● Figures in [ ] represent the dimensions with brake.

<Cautions> Reduce the moment of inertia ratio if high speed response operation is required.
Dimensions are subject to change without notice. Contact us or a dealer for the latest information.
Read the Instruction Manual carefully and understand all precautions and remarks before using the products.
Please avoid the motor, or equipment containing the motor to be distributed to Japan, or other regions through Japan.

Special Order Product

200 V MDMF 3.0 kW [Middle inertia 130 mm sq.]

• Please contact us for more information.

Specifications

			AC200 V
Motor model *1	IP67		MDMF302L1□□M
Applicable driver	Model No.	Multifunction type	MFDLTA3SF
		RS485 communication type *2	MFDLNA3SG
		Basic type *2	MFDLNA3SE
	Frame symbol		F-frame
Power supply capacity		(kVA)	4.5
Rated output		(W)	3000
Rated torque		(N·m)	14.3
Continuous stall torque		(N·m)	15.0
Momentary Max. peak torque		(N·m)	43.0
Rated current		(A(rms))	16.4
Max. current		(A(o-p))	70
Regenerative brake frequency (times/min) Note)1	Without option		No limit Note)2
	DV0P4285×2		No limit Note)2
Rated rotational speed		(r/min)	2000
Max. rotational speed		(r/min)	3000
Moment of inertia of rotor ($\times 10^{-4}$ kg·m^2)	Without brake		18.6
	With brake		19.6
Recommended moment of inertia ratio of the load and the rotor Note)3			10 times or less
Rotary encoder specifications *3			23-bit Absolute
	Resolution per single turn		8388608

• **Brake specifications** (For details, refer to P.167)
(This brake will be released when it is energized. Do not use this for braking the motor in motion.)

Static friction torque (N·m)	22.0 or more
Engaging time (ms)	110 or less
Releasing time (ms) Note)4	50 or less
Exciting current (DC) (A)	0.90±10 %
Releasing voltage (DC) (V)	2 or more
Exciting voltage (DC) (V)	24±2.4

• **Permissible load** (For details, refer to P.166)

During assembly	Radial load P-direction (N)	980
	Thrust load A-direction (N)	588
	Thrust load B-direction (N)	686
During operation	Radial load P-direction (N)	784
	Thrust load A, B-direction (N)	343

• For details of Note)1 to Note)4, refer to P.165.
• Dimensions of Driver, refer to P.49.
*1 □□ in the motor part number represents the motor specifications.
*2 Basic type and RS485 communication type are "Position control type".
Detail of model designation, refer to P.116.
*3 When using a rotary encoder as an incremental system (not using multi-turn data), do not connect a battery for absolute encoder.

Torque characteristics (at AC200 V of power voltage <Dotted line represents the torque at 10 % less supply voltage.>)

With oil seal

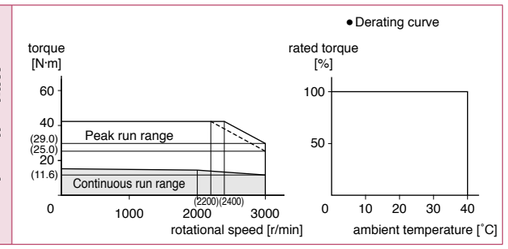

Dimensions

Mass: Without brake: 9.3 kg
With brake: 10.9 kg

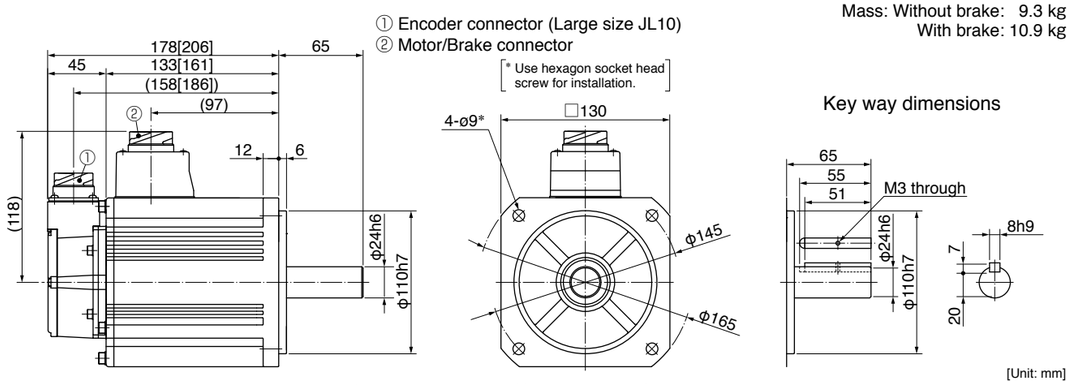

● Figures in [ ] represent the dimensions with brake.

<Cautions> Reduce the moment of inertia ratio if high speed response operation is required.
Dimensions are subject to change without notice. Contact us or a dealer for the latest information.
Read the Instruction Manual carefully and understand all precautions and remarks before using the products.
Please avoid the motor, or equipment containing the motor to be distributed to Japan, or other regions through Japan.

Special Order Product

200 V MDMF 4.0 kW [Middle inertia 176 mm sq.]

• Please contact us for more information.

Specifications

			AC200 V
Motor model *1	IP67		MDMF402L1□□M
Applicable driver	Model No.	Multifunction type	MFDLTB3SF
		RS485 communication type *2	MFDLNB3SG
		Basic type *2	MFDLNB3SE
	Frame symbol		F-frame
Power supply capacity		(kVA)	7.5
Rated output		(W)	4000
Rated torque		(N·m)	19.1
Continuous stall torque		(N·m)	22.0
Momentary Max. peak torque		(N·m)	57.3
Rated current		(A(rms))	20.0
Max. current		(A(o-p))	85
Regenerative brake frequency (times/min) Note)1	Without option		No limit Note)2
	DV0P4285×2		No limit Note)2
Rated rotational speed		(r/min)	2000
Max. rotational speed		(r/min)	3000
Moment of inertia of rotor ($\times 10^{-4}$ kg·m^2)	Without brake		46.9
	With brake		52.3
Recommended moment of inertia ratio of the load and the rotor Note)3			10 times or less
Rotary encoder specifications *3			23-bit Absolute
	Resolution per single turn		8388608

• **Brake specifications** (For details, refer to P.167)
(This brake will be released when it is energized. Do not use this for braking the motor in motion.)

Static friction torque (N·m)	25.0 or more
Engaging time (ms)	80 or less
Releasing time (ms) Note)4	25 or less
Exciting current (DC) (A)	1.29±10 %
Releasing voltage (DC) (V)	2 or more
Exciting voltage (DC) (V)	24±2.4

• **Permissible load** (For details, refer to P.166)

During assembly	Radial load P-direction (N)	1666
	Thrust load A-direction (N)	784
	Thrust load B-direction (N)	980
During operation	Radial load P-direction (N)	784
	Thrust load A, B-direction (N)	343

• For details of Note)1 to Note)4, refer to P.165.
• Dimensions of Driver, refer to P.49.
*1 □□ in the motor part number represents the motor specifications.
*2 Basic type and RS485 communication type are "Position control type".
Detail of model designation, refer to P.116.
*3 When using a rotary encoder as an incremental system (not using multi-turn data), do not connect a battery for absolute encoder.

Torque characteristics (at AC200 V of power voltage <Dotted line represents the torque at 10 % less supply voltage.>)

With oil seal

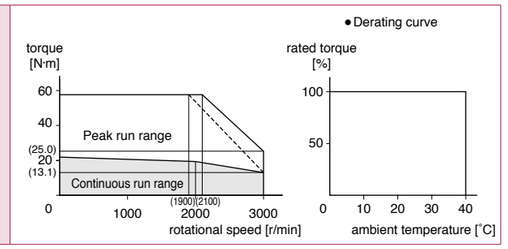

Dimensions

Mass: Without brake: 13.4 kg
With brake: 16.8 kg

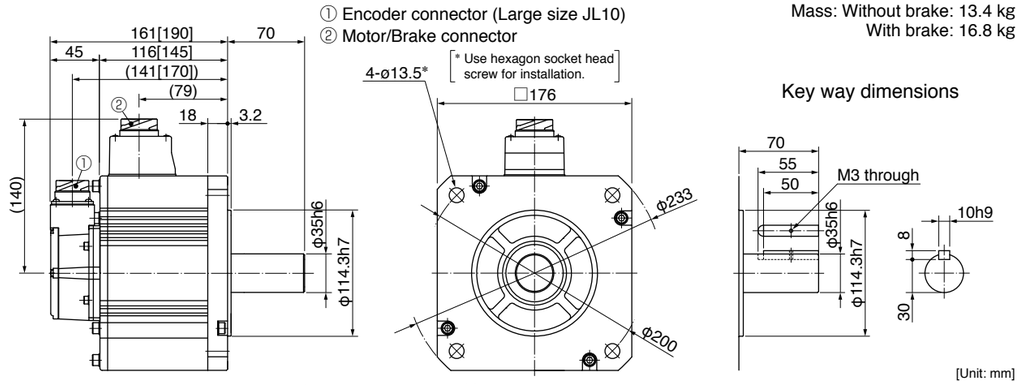

● Figures in [ ] represent the dimensions with brake.

<Cautions> Reduce the moment of inertia ratio if high speed response operation is required.
Dimensions are subject to change without notice. Contact us or a dealer for the latest information.
Read the Instruction Manual carefully and understand all precautions and remarks before using the products.
Please avoid the motor, or equipment containing the motor to be distributed to Japan, or other regions through Japan.

Special Order Product

200 V MDMF 5.0 kW [Middle inertia 176 mm sq.]

• Please contact us for more information.

Specifications

			AC200 V
Motor model *1	IP67		MDMF502L1□□M
Applicable driver	Model No.	Multifunction type	MFDLTB3SF
		RS485 communication type *2	MFDLNB3SG
		Basic type *2	MFDLNB3SE
	Frame symbol		F-frame
Power supply capacity		(kVA)	7.5
Rated output		(W)	5000
Rated torque		(N·m)	23.9
Continuous stall torque		(N·m)	26.3
Momentary Max. peak torque		(N·m)	71.6
Rated current		(A(rms))	23.3
Max. current		(A(o-p))	99
Regenerative brake frequency (times/min) Note)1	Without option		No limit Note)2
	DV0P4285×2		No limit Note)2
Rated rotational speed		(r/min)	2000
Max. rotational speed		(r/min)	3000
Moment of inertia of rotor ($\times 10^{-4}$ kg·m^2)	Without brake		58.2
	With brake		63.0
Recommended moment of inertia ratio of the load and the rotor Note)3			10 times or less
Rotary encoder specifications *3			23-bit Absolute
	Resolution per single turn		8388608

• **Brake specifications** (For details, refer to P.167)
(This brake will be released when it is energized. Do not use this for braking the motor in motion.)

Static friction torque (N·m)	44.1 or more
Engaging time (ms)	150 or less
Releasing time (ms) Note)4	30 or less
Exciting current (DC) (A)	1.29±10 %
Releasing voltage (DC) (V)	2 or more
Exciting voltage (DC) (V)	24±2.4

• **Permissible load** (For details, refer to P.166)

During assembly	Radial load P-direction (N)	1666
	Thrust load A-direction (N)	784
	Thrust load B-direction (N)	980
During operation	Radial load P-direction (N)	784
	Thrust load A, B-direction (N)	343

• For details of Note)1 to Note)4, refer to P.165.
• Dimensions of Driver, refer to P.49.
*1 □□ in the motor part number represents the motor specifications.
*2 Basic type and RS485 communication type are "Position control type".
Detail of model designation, refer to P.116.
*3 When using a rotary encoder as an incremental system (not using multi-turn data), do not connect a battery for absolute encoder.

Torque characteristics (at AC200 V of power voltage <Dotted line represents the torque at 10 % less supply voltage.>)

With oil seal

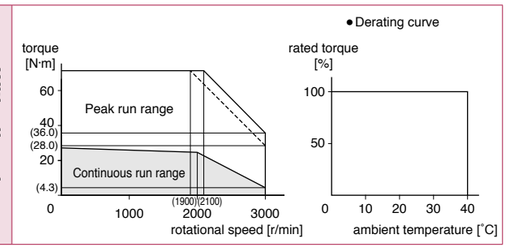

Dimensions

Mass: Without brake: 15.6 kg
With brake: 19.0 kg

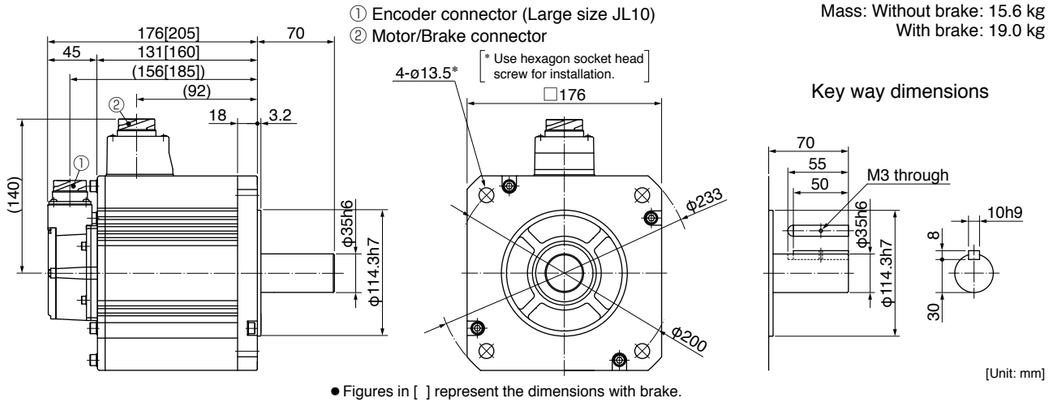

● Figures in [ ] represent the dimensions with brake.

<Cautions> Reduce the moment of inertia ratio if high speed response operation is required.
Dimensions are subject to change without notice. Contact us or a dealer for the latest information.
Read the Instruction Manual carefully and understand all precautions and remarks before using the products.
Please avoid the motor, or equipment containing the motor to be distributed to Japan, or other regions through Japan.

Special Order Product

200 V MGMF 0.85 kW [Middle inertia Low speed/High torque type 130 mm sq.]

• Please contact us for more information.

Specifications

			AC200 V
Motor model *1	IP67		MGMF092L1□□M
Applicable driver	Model No.	Multifunction type	MDDLT45SF
		RS485 communication type *2	MDDLN45SG
		Basic type *2	MDDLN45SE
	Frame symbol		D-frame
Power supply capacity		(kVA)	1.8
Rated output		(W)	850
Rated torque		(N·m)	5.41
Continuous stall torque		(N·m)	5.41
Momentary Max. peak torque		(N·m)	14.3
Rated current		(A(rms))	5.9
Max. current		(A(o-p))	22
Regenerative brake frequency (times/min) Note)1	Without option		No limit Note)2
	DV0P4284		No limit Note)2
Rated rotational speed		(r/min)	1500
Max. rotational speed		(r/min)	3000
Moment of inertia of rotor ($\times 10^{-4}$ kg·m^2)	Without brake		6.18
	With brake		7.40
Recommended moment of inertia ratio of the load and the rotor Note)3			10 times or less
Rotary encoder specifications *3			23-bit Absolute
	Resolution per single turn		8388608

• **Brake specifications** (For details, refer to P.167)
(This brake will be released when it is energized. Do not use this for braking the motor in motion.)

Static friction torque (N·m)	13.7 or more
Engaging time (ms)	100 or less
Releasing time (ms) Note)4	50 or less
Exciting current (DC) (A)	0.79±10 %
Releasing voltage (DC) (V)	2 or more
Exciting voltage (DC) (V)	24±2.4

• **Permissible load** (For details, refer to P.166)

During assembly	Radial load P-direction (N)	980
	Thrust load A-direction (N)	588
	Thrust load B-direction (N)	686
During operation	Radial load P-direction (N)	686
	Thrust load A, B-direction (N)	196

• For details of Note)1 to Note)4, refer to P.165.
• Dimensions of Driver, refer to P.48.
*1 □□ in the motor part number represents the motor specifications.
*2 Basic type and RS485 communication type are "Position control type".
Detail of model designation, refer to P.116.
*3 When using a rotary encoder as an incremental system (not using multi-turn data), do not connect a battery for absolute encoder.

Torque characteristics (at AC200 V of power voltage <Dotted line represents the torque at 10 % less supply voltage.>)

With oil seal

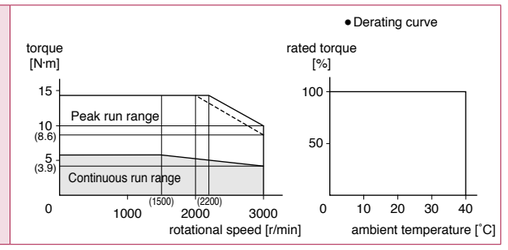

Dimensions

Mass: Without brake: 4.6 kg
With brake: 6.1 kg

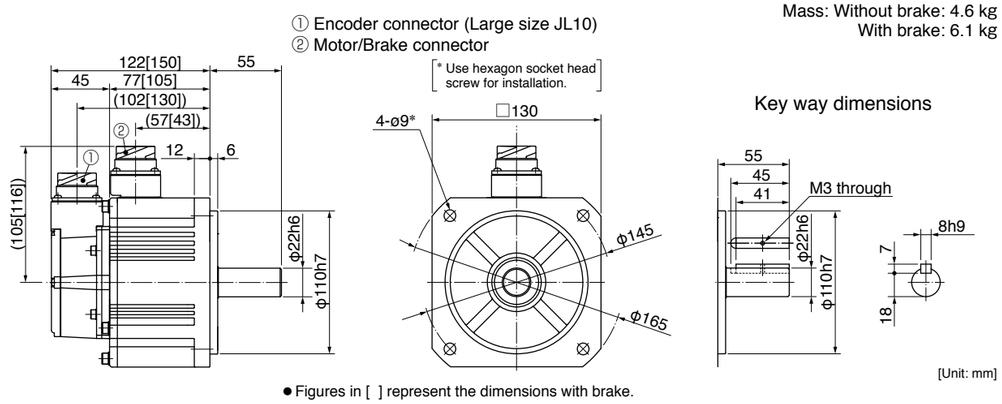

● Figures in [ ] represent the dimensions with brake.

<Cautions> Reduce the moment of inertia ratio if high speed response operation is required.
Dimensions are subject to change without notice. Contact us or a dealer for the latest information.
Read the Instruction Manual carefully and understand all precautions and remarks before using the products.
Please avoid the motor, or equipment containing the motor to be distributed to Japan, or other regions through Japan.

Special Order Product

200 V MGMF 1.3 kW [Middle inertia Low speed/High torque type 130 mm sq.]

• Please contact us for more information.

Specifications

			AC200 V
Motor model *1	IP67		MGMF132L1□□M
Applicable driver	Model No.	Multifunction type	MDDLT55SF
		RS485 communication type *2	MDDLN55SG
		Basic type *2	MDDLN55SE
	Frame symbol		D-frame
Power supply capacity (kVA)			2.3
Rated output (W)			1300
Rated torque (N·m)			8.28
Continuous stall torque (N·m)			8.28
Momentary Max. peak torque (N·m)			23.3
Rated current (A(rms))			9.3
Max. current (A(o-p))			37
Regenerative brake frequency (times/min) Note)1	Without option		No limit Note)2
	DV0P4284		No limit Note)2
Rated rotational speed (r/min)			1500
Max. rotational speed (r/min)			3000
Moment of inertia of rotor ($\times 10^{-4}$ kg·m^2)	Without brake		9.16
	With brake		10.4
Recommended moment of inertia ratio of the load and the rotor Note)3			10 times or less
Rotary encoder specifications *3			23-bit Absolute
	Resolution per single turn		8388608

• Brake specifications (For details, refer to P.167)

(This brake will be released when it is energized. Do not use this for braking the motor in motion.)

Static friction torque (N·m)	13.7 or more
Engaging time (ms)	100 or less
Releasing time (ms) Note)4	50 or less
Exciting current (DC) (A)	0.79±10 %
Releasing voltage (DC) (V)	2 or more
Exciting voltage (DC) (V)	24±2.4

• Permissible load (For details, refer to P.166)

During assembly	Radial load P-direction (N)	980
	Thrust load A-direction (N)	588
	Thrust load B-direction (N)	686
During operation	Radial load P-direction (N)	686
	Thrust load A, B-direction (N)	196

• For details of Note)1 to Note)4, refer to P.165.
• Dimensions of Driver, refer to P.48.
*1 □□ in the motor part number represents the motor specifications.
*2 Basic type and RS485 communication type are "Position control type".
Detail of model designation, refer to P.116.
*3 When using a rotary encoder as an incremental system (not using multi-turn data), do not connect a battery for absolute encoder.

Torque characteristics (at AC200 V of power voltage <Dotted line represents the torque at 10 % less supply voltage.>)

With oil seal

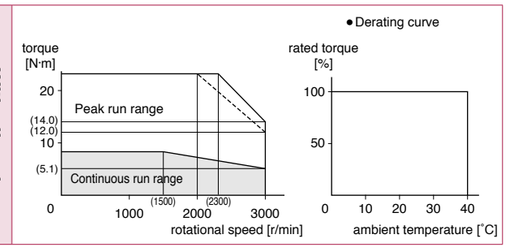

Dimensions

Mass: Without brake: 5.7 kg
With brake: 7.5 kg

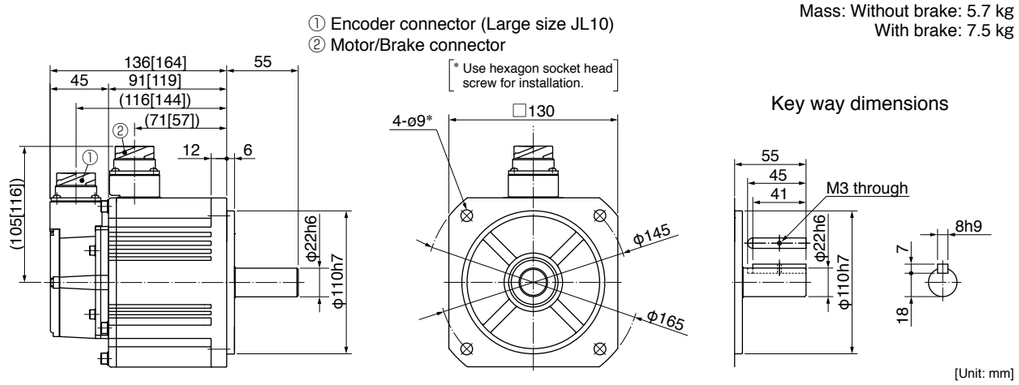

● Figures in [ ] represent the dimensions with brake.

<Cautions> Reduce the moment of inertia ratio if high speed response operation is required.
Dimensions are subject to change without notice. Contact us or a dealer for the latest information.
Read the Instruction Manual carefully and understand all precautions and remarks before using the products.
Please avoid the motor, or equipment containing the motor to be distributed to Japan, or other regions through Japan.

Special Order Product

200 V MGMF 1.8 kW [Middle inertia Low speed/High torque type 130 mm sq.]

• Please contact us for more information.

Specifications

			AC200 V
Motor model *1	IP67		MGMF182L1□□M
Applicable driver	Model No.	Multifunction type	MEDLT83SF
		RS485 communication type *2	MEDLN83SG
		Basic type *2	MEDLN83SE
	Frame symbol		E-frame
Power supply capacity (kVA)			3.8
Rated output (W)			1800
Rated torque (N·m)			11.5
Continuous stall torque (N·m)			11.5
Momentary Max. peak torque (N·m)			28.7
Rated current (A(rms))			11.8
Max. current (A(o-p))			42
Regenerative brake frequency (times/min) Note)1	Without option		No limit Note)2
	DV0P4285×2		No limit Note)2
Rated rotational speed (r/min)			1500
Max. rotational speed (r/min)			3000
Moment of inertia of rotor ($\times 10^{-4}$ kg·m^2)	Without brake		12.1
	With brake		13.3
Recommended moment of inertia ratio of the load and the rotor Note)3			10 times or less
Rotary encoder specifications *3			23-bit Absolute
	Resolution per single turn		8388608

• Brake specifications (For details, refer to P.167)

(This brake will be released when it is energized. Do not use this for braking the motor in motion.)

Static friction torque (N·m)	13.7 or more
Engaging time (ms)	100 or less
Releasing time (ms) Note)4	50 or less
Exciting current (DC) (A)	0.79±10 %
Releasing voltage (DC) (V)	2 or more
Exciting voltage (DC) (V)	24±2.4

• Permissible load (For details, refer to P.166)

During assembly	Radial load P-direction (N)	980
	Thrust load A-direction (N)	588
	Thrust load B-direction (N)	686
During operation	Radial load P-direction (N)	686
	Thrust load A, B-direction (N)	196

• For details of Note)1 to Note)4, refer to P.165.
• Dimensions of Driver, refer to P.49.
*1 □□ in the motor part number represents the motor specifications.
*2 Basic type and RS485 communication type are "Position control type".
Detail of model designation, refer to P.116.
*3 When using a rotary encoder as an incremental system (not using multi-turn data), do not connect a battery for absolute encoder.

Torque characteristics (at AC200 V of power voltage <Dotted line represents the torque at 10 % less supply voltage.>)

With oil seal

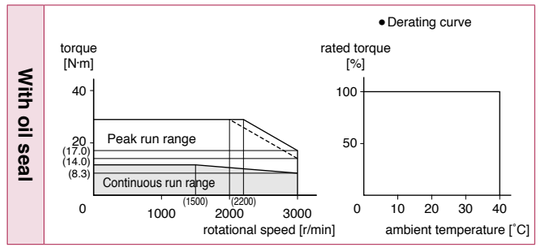

Dimensions

Mass: Without brake: 6.9 kg
With brake: 8.4 kg

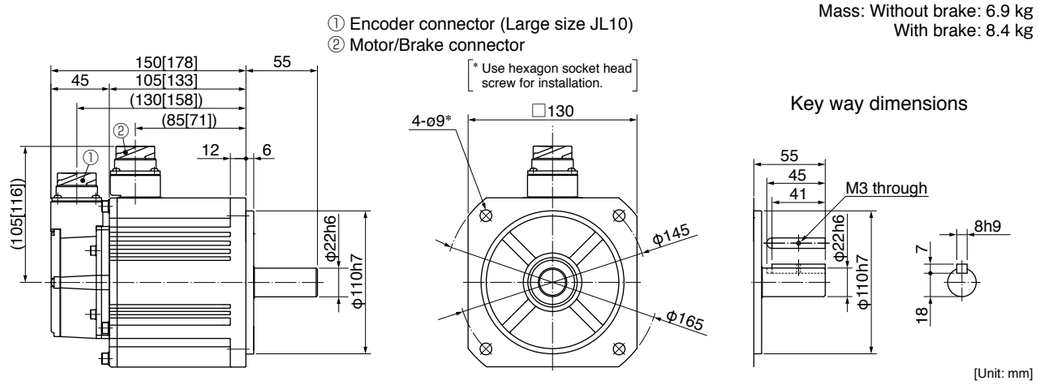

● Figures in [ ] represent the dimensions with brake.

<Cautions> Reduce the moment of inertia ratio if high speed response operation is required.
Dimensions are subject to change without notice. Contact us or a dealer for the latest information.
Read the Instruction Manual carefully and understand all precautions and remarks before using the products.
Please avoid the motor, or equipment containing the motor to be distributed to Japan, or other regions through Japan.

Special Order Product

200 V MGMF 2.9 kW [Middle inertia Low speed/High torque type 176 mm sq.]

• Please contact us for more information.

Specifications

			AC200 V
Motor model *1	IP67		MGMF292L1□□M
Applicable driver	Model No.	Multifunction type	MFDLTB3SF
		RS485 communication type *2	MFDLNB3SG
		Basic type *2	MFDLNB3SE
	Frame symbol		F-frame
Power supply capacity		(kVA)	7.5
Rated output		(W)	2900
Rated torque		(N·m)	18.5
Continuous stall torque		(N·m)	18.5
Momentary Max. peak torque		(N·m)	45.2
Rated current		(A(rms))	19.3
Max. current		(A(o-p))	67
Regenerative brake frequency (times/min) Note)1	Without option		No limit Note)2
	DV0P4285×2		No limit Note)2
Rated rotational speed		(r/min)	1500
Max. rotational speed		(r/min)	3000
Moment of inertia of rotor ($\times 10^{-4}$ kg·m^2)	Without brake		46.9
	With brake		52.3
Recommended moment of inertia ratio of the load and the rotor Note)3			10 times or less
Rotary encoder specifications *3			23-bit Absolute
	Resolution per single turn		8388608

• Brake specifications (For details, refer to P.167)

(This brake will be released when it is energized. Do not use this for braking the motor in motion.)

Static friction torque (N·m)	25.0 or more
Engaging time (ms)	80 or less
Releasing time (ms) Note)4	25 or less
Exciting current (DC) (A)	1.29±10 %
Releasing voltage (DC) (V)	2 or more
Exciting voltage (DC) (V)	24±2.4

• Permissible load (For details, refer to P.166)

During assembly	Radial load P-direction (N)	1666
	Thrust load A-direction (N)	784
	Thrust load B-direction (N)	980
During operation	Radial load P-direction (N)	1176
	Thrust load A, B-direction (N)	490

• For details of Note)1 to Note)4, refer to P.165.
• Dimensions of Driver, refer to P.49.
*1 □□ in the motor part number represents the motor specifications.
*2 Basic type and RS485 communication type are "Position control type".
Detail of model designation, refer to P.116.
*3 When using a rotary encoder as an incremental system (not using multi-turn data), do not connect a battery for absolute encoder.

Torque characteristics (at AC200 V of power voltage <Dotted line represents the torque at 10 % less supply voltage.>)

With oil seal

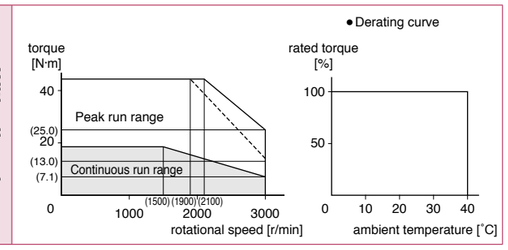

Dimensions

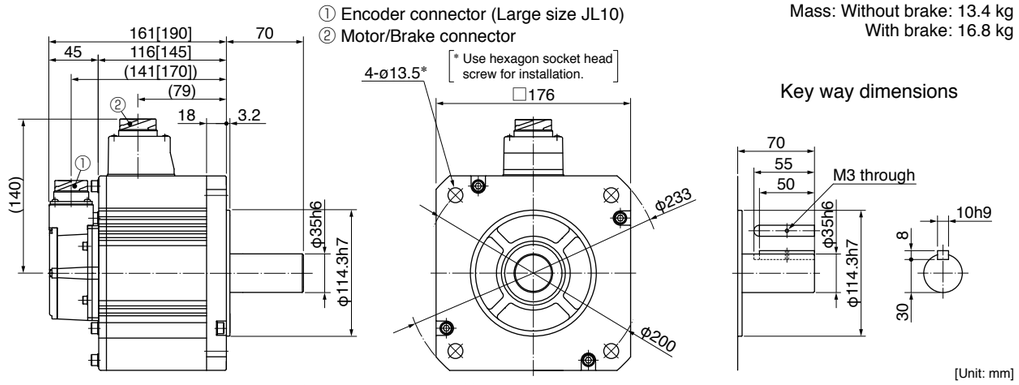

Mass: Without brake: 13.4 kg
With brake: 16.8 kg

• Figures in [ ] represent the dimensions with brake.

<Cautions> Reduce the moment of inertia ratio if high speed response operation is required.
Dimensions are subject to change without notice. Contact us or a dealer for the latest information.
Read the Instruction Manual carefully and understand all precautions and remarks before using the products.
Please avoid the motor, or equipment containing the motor to be distributed to Japan, or other regions through Japan.

Special Order Product

200 V MGMF 4.4 kW [Middle inertia Low speed/High torque type 176 mm sq.]

• Please contact us for more information.

Specifications

			AC200 V
Motor model *1	IP67		MGMF442L1□□M
Applicable driver	Model No.	Multifunction type	MFDLTB3SF
		RS485 communication type *2	MFDLNB3SG
		Basic type *2	MFDLNB3SE
	Frame symbol		F-frame
Power supply capacity		(kVA)	7.5
Rated output		(W)	4400
Rated torque		(N·m)	28.0
Continuous stall torque		(N·m)	28.0
Momentary Max. peak torque		(N·m)	70.0
Rated current		(A(rms))	27.2
Max. current		(A(o-p))	96
Regenerative brake frequency (times/min) Note)1	Without option		No limit Note)2
	DV0P4285×2		No limit Note)2
Rated rotational speed		(r/min)	1500
Max. rotational speed		(r/min)	3000
Moment of inertia of rotor ($\times 10^{-4}$ kg·m^2)	Without brake		58.2
	With brake		63.0
Recommended moment of inertia ratio of the load and the rotor Note)3			10 times or less
Rotary encoder specifications *3			23-bit Absolute
	Resolution per single turn		8388608

• Brake specifications (For details, refer to P.167)

(This brake will be released when it is energized. Do not use this for braking the motor in motion.)

Static friction torque (N·m)	44.1 or more
Engaging time (ms)	150 or less
Releasing time (ms) Note)4	30 or less
Exciting current (DC) (A)	1.29±10 %
Releasing voltage (DC) (V)	2 or more
Exciting voltage (DC) (V)	24±2.4

• Permissible load (For details, refer to P.166)

During assembly	Radial load P-direction (N)	1666
	Thrust load A-direction (N)	784
	Thrust load B-direction (N)	980
During operation	Radial load P-direction (N)	1470
	Thrust load A, B-direction (N)	490

• For details of Note)1 to Note)4, refer to P.165.
• Dimensions of Driver, refer to P.49.
*1 □□ in the motor part number represents the motor specifications.
*2 Basic type and RS485 communication type are "Position control type".
Detail of model designation, refer to P.116.
*3 When using a rotary encoder as an incremental system (not using multi-turn data), do not connect a battery for absolute encoder.

Torque characteristics (at AC200 V of power voltage <Dotted line represents the torque at 10 % less supply voltage.>)

With oil seal

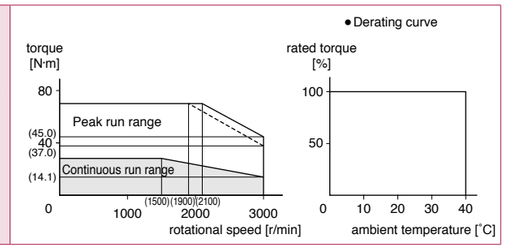

Dimensions

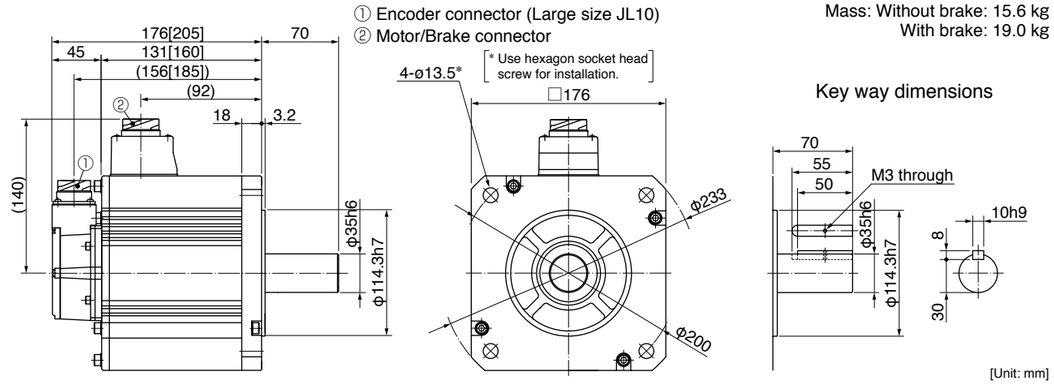

Mass: Without brake: 15.6 kg
With brake: 19.0 kg

• Figures in [ ] represent the dimensions with brake.

<Cautions> Reduce the moment of inertia ratio if high speed response operation is required.
Dimensions are subject to change without notice. Contact us or a dealer for the latest information.
Read the Instruction Manual carefully and understand all precautions and remarks before using the products.
Please avoid the motor, or equipment containing the motor to be distributed to Japan, or other regions through Japan.

Special Order Product

MQMF 100 W to 400 W
Leadwire type (IP65) with oil seal

● MQMF012L1□□M

<without brake> <with brake>

① Encoder connector
② Brake connector
③ Motor connector

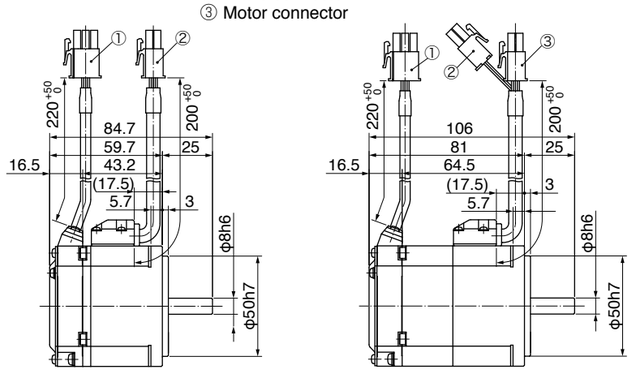

Key way dimensions [Unit: mm]
<Key way, center tap shaft>

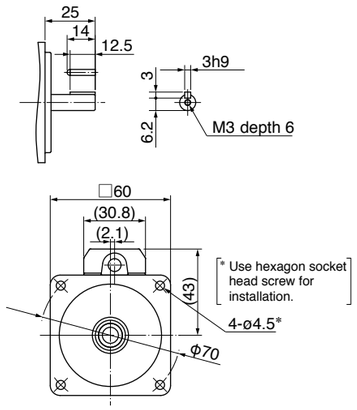

● MQMF022L1□□M

<without brake> <with brake>

① Encoder connector
② Brake connector
③ Motor connector

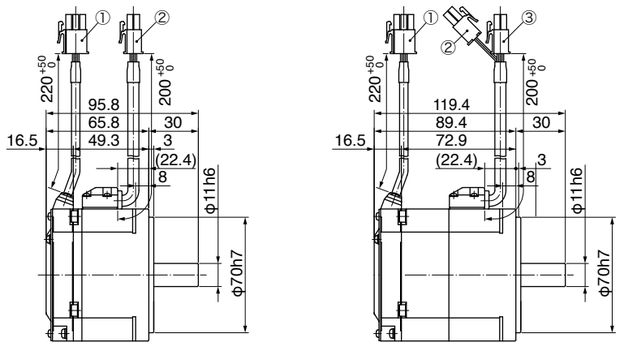

Key way dimensions [Unit: mm]
<Key way, center tap shaft>

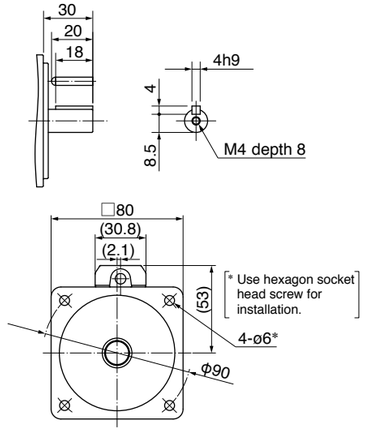

● MQMF042L1□□M

<without brake> <with brake>

① Encoder connector
② Brake connector
③ Motor connector

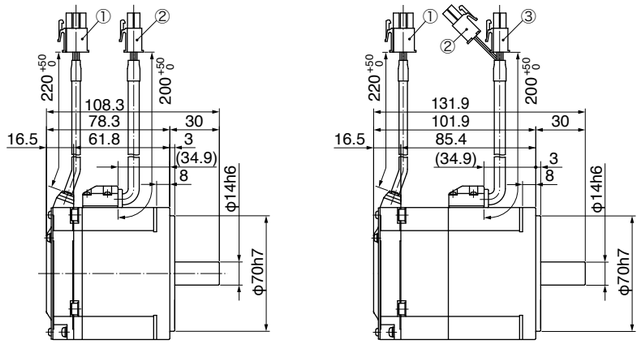

Key way dimensions [Unit: mm]
<Key way, center tap shaft>

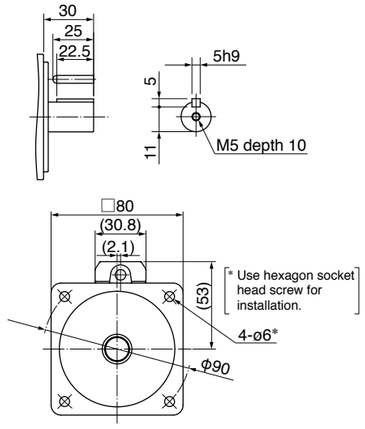

* For motors specifications, refer to P.133 to P.135.

MQMF 100 W to 400 W
Leadwire type (IP65) with protective lip/ with oil seal

● MQMF012L1□□M

<without brake> <with brake>

① Encoder connector
② Brake connector
③ Motor connector

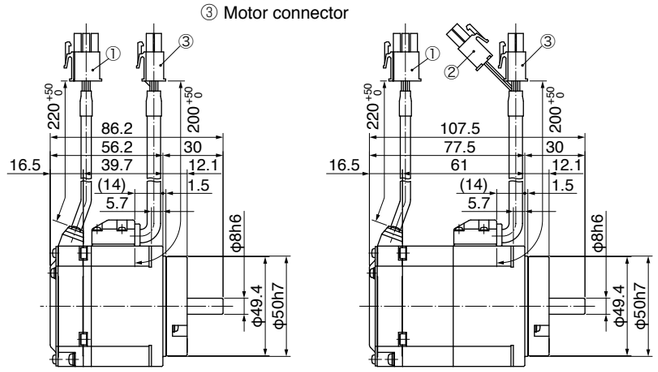

Key way dimensions [Unit: mm]
<Key way, center tap shaft>

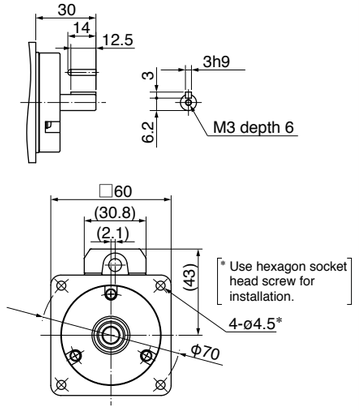

● MQMF022L1□□M

<without brake> <with brake>

① Encoder connector
② Brake connector
③ Motor connector

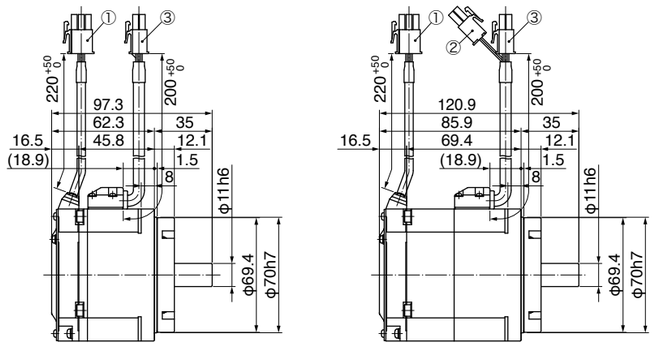

Key way dimensions [Unit: mm]
<Key way, center tap shaft>

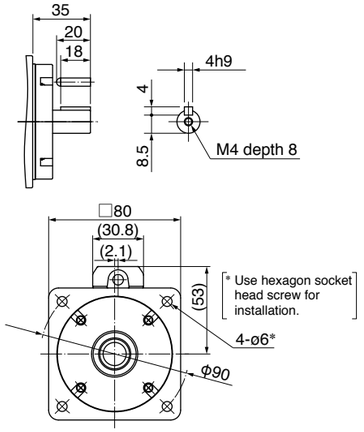

● MQMF042L1□□M

<without brake> <with brake>

① Encoder connector
② Brake connector
③ Motor connector

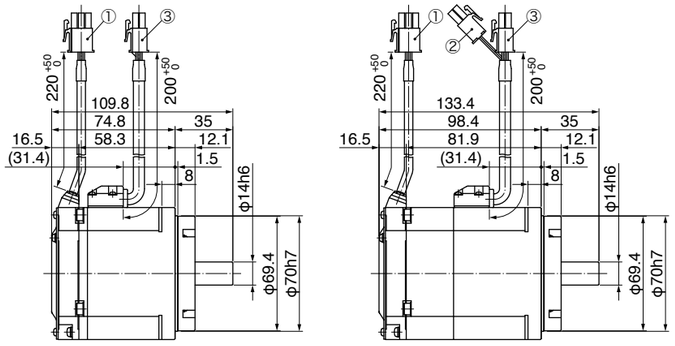

Key way dimensions [Unit: mm]
<Key way, center tap shaft>

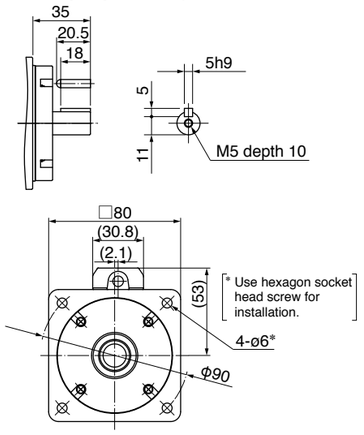

* For motors specifications, refer to P.133 to P.135.

Special Order Product

MHMF 50 W to 200 W
Leadwire type (IP65) with oil seal

● MHMF5AZL1□□M

[Unit: mm]

<without brake> <with brake>

① Encoder connector
② Brake connector
③ Motor connector

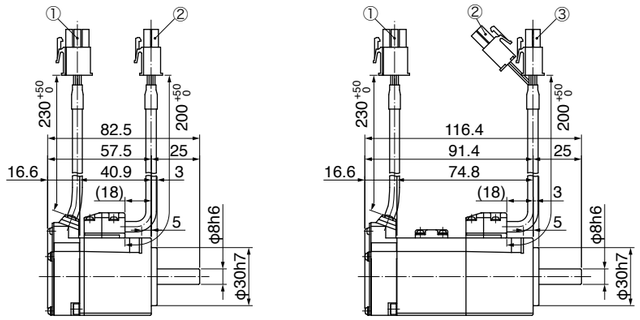

Key way dimensions
<Key way, center tap shaft>

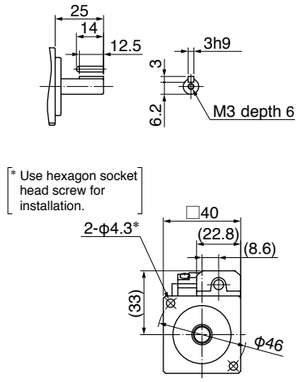

● MHMF012L1□□M

[Unit: mm]

<without brake> <with brake>

① Encoder connector
② Brake connector
③ Motor connector

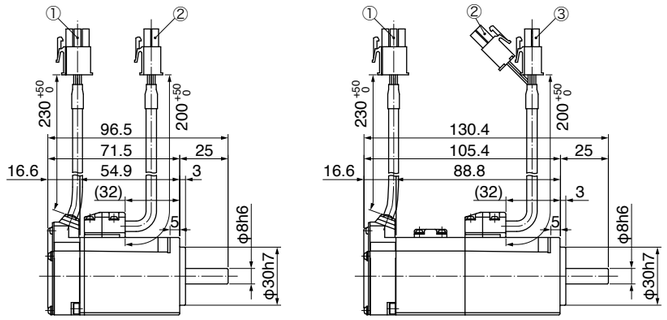

Key way dimensions
<Key way, center tap shaft>

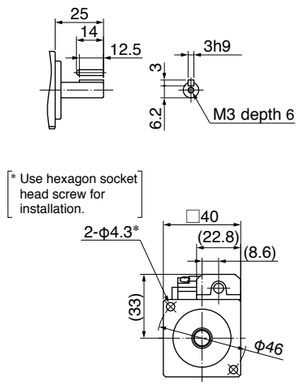

● MHMF022L1□□M

[Unit: mm]

<without brake> <with brake>

① Encoder connector
② Brake connector
③ Motor connector

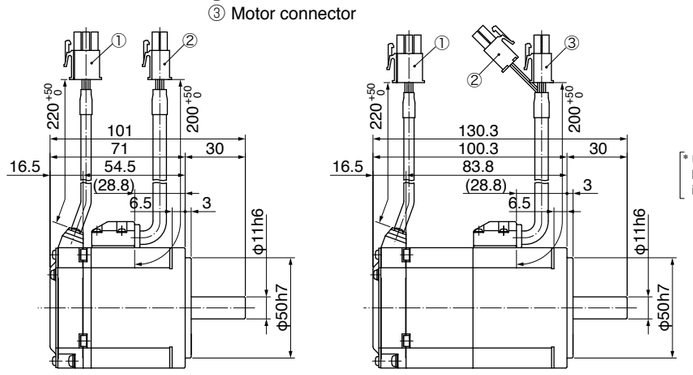

Key way dimensions
<Key way, center tap shaft>

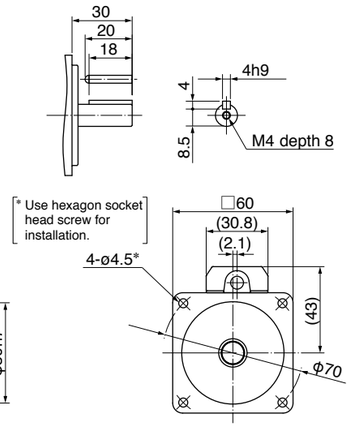

* For motors specifications, refer to P.136 to P.138.

MHMF 400 W to 1000 W
Leadwire type (IP65) with oil seal

● MHMF042L1□□M

[Unit: mm]

<without brake> <with brake>

① Encoder connector
② Brake connector
③ Motor connector

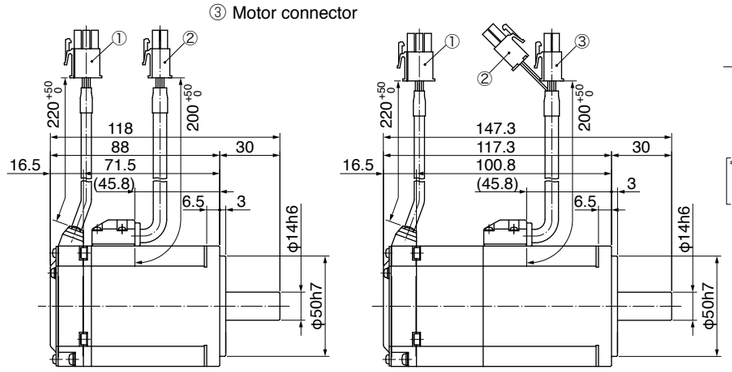

Key way dimensions
<Key way, center tap shaft>

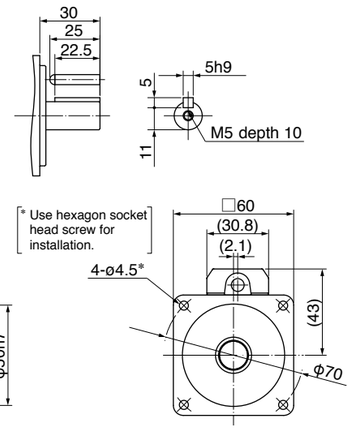

● MHMF082L1□□M

[Unit: mm]

<without brake> <with brake>

① Encoder connector
② Brake connector
③ Motor connector

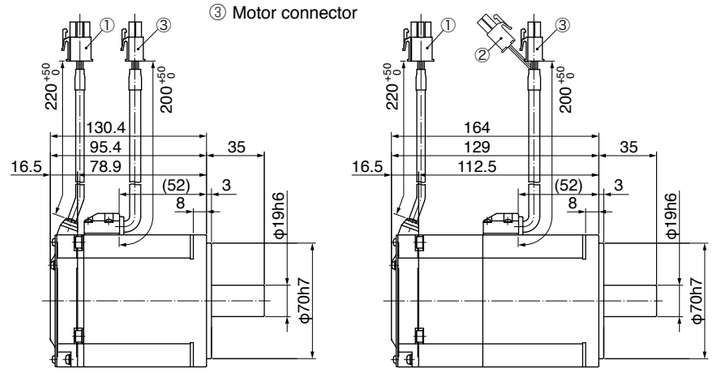

Key way dimensions
<Key way, center tap shaft>

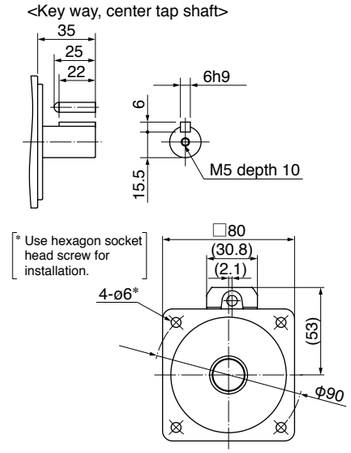

● MHMF092L1□□M

[Unit: mm]

<without brake> <with brake>

① Encoder connector
② Brake connector
③ Motor connector

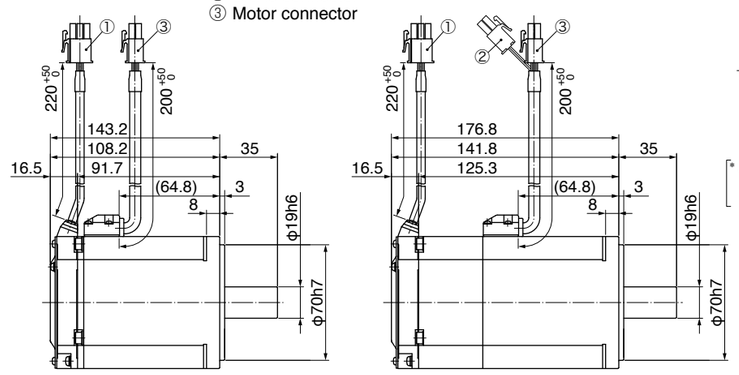

Key way dimensions
<Key way, center tap shaft>

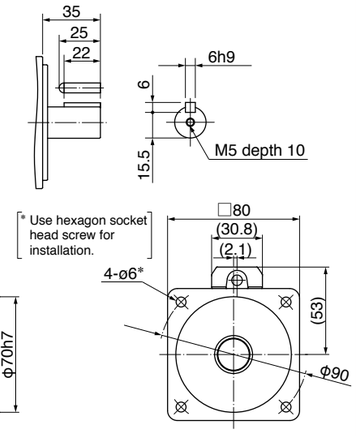

* For motors specifications, refer to P.139 to P.141.

Special Order Product

MHMF 50 W to 200 W
Leadwire type (IP65) with protective lip/ with oil seal

● MHMF5AZL1□□M

<without brake> <with brake>

① Encoder connector
② Brake connector
③ Motor connector

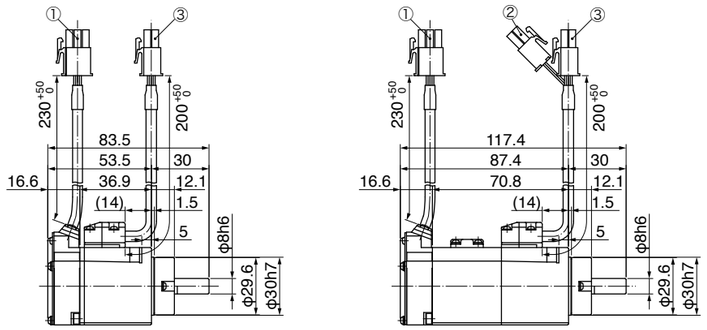

Key way dimensions [Unit: mm]
<Key way, center tap shaft>

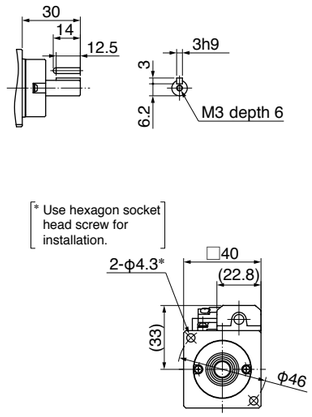

● MHMF012L1□□M

<without brake> <with brake>

① Encoder connector
② Brake connector
③ Motor connector

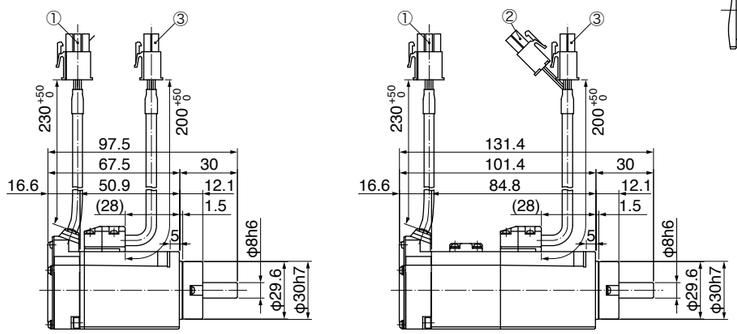

Key way dimensions [Unit: mm]
<Key way, center tap shaft>

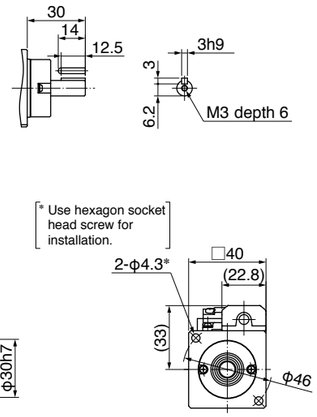

● MHMF022L1□□M

<without brake> <with brake>

① Encoder connector
② Brake connector
③ Motor connector

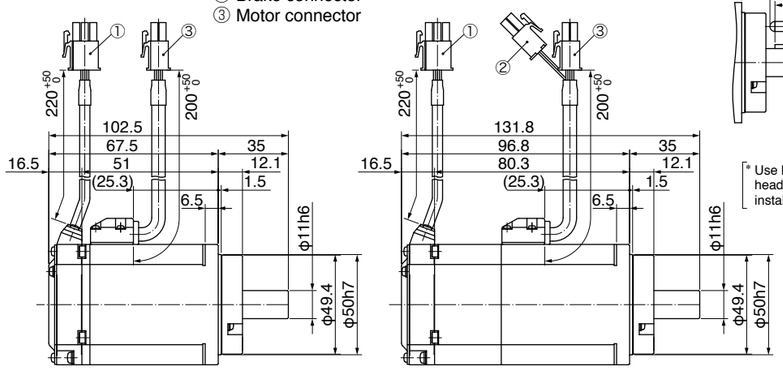

Key way dimensions [Unit: mm]
<Key way, center tap shaft>

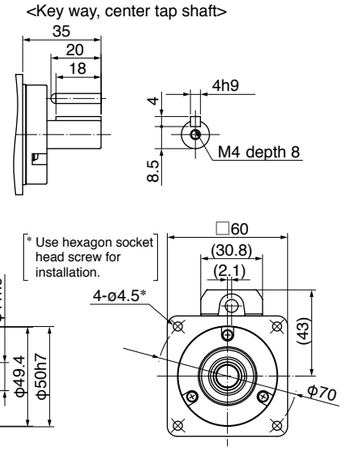

* For motors specifications, refer to P.136 to P.138.

MHMF 400 W to 1000 W
Leadwire type (IP65) with protective lip/ with oil seal

● MHMF042L1□□M

<without brake> <with brake>

① Encoder connector
② Brake connector
③ Motor connector

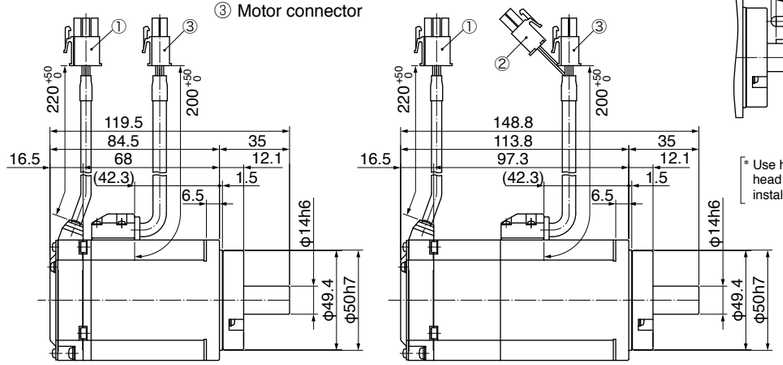

Key way dimensions [Unit: mm]
<Key way, center tap shaft>

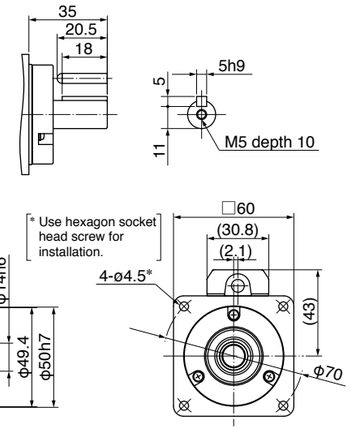

● MHMF082L1□□M

<without brake> <with brake>

① Encoder connector
② Brake connector
③ Motor connector

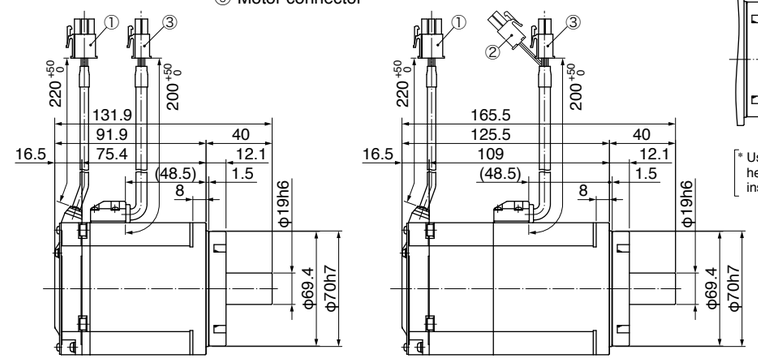

Key way dimensions [Unit: mm]
<Key way, center tap shaft>

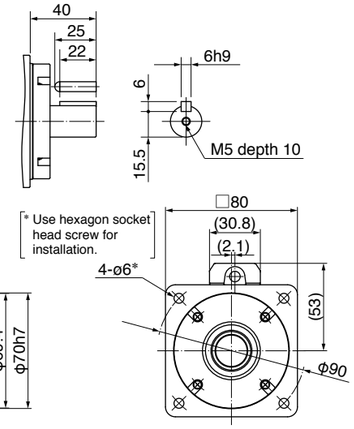

● MHMF092L1□□M

<without brake> <with brake>

① Encoder connector
② Brake connector
③ Motor connector

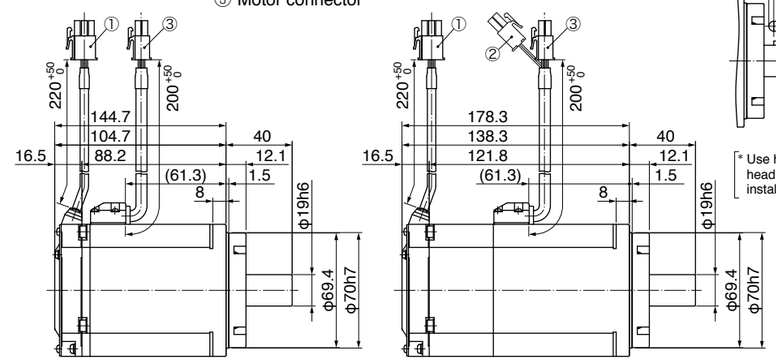

Key way dimensions [Unit: mm]
<Key way, center tap shaft>

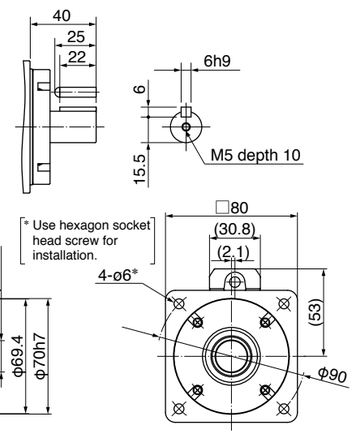

* For motors specifications, refer to P.139 to P.141.

Environmental Conditions

Item		Conditions
Ambient temperature *1		0 ˚C to 40 ˚C (free from freezing)
Ambient humidity		20 % to 85 % RH (free from condensation)
Storage temperature *2		–20 ˚C to 65 ˚C (Max.temperature guarantee: 80 ˚C for 72 hours free from condensation*5)
Storage humidity		20 % to 85 % RH (free from condensation*5)
Vibration	Motor only	Lower than 49 m/s^2 (5 G) at running, 24.5 m/s^2 (2.5 G) at stall
Impact	Motor only	Lower than 98 m/s^2 (10 G)
Enclosure rating (Motor only)	IP65 *3	MSMF, MQMF, MHMF (except rotating portion of output shaft and leadwire end.) (MSMF, MQMF, MHMF In case of leadwire type.)
	IP67 *3*4	IP67 motor (except rotating portion of output shaft and connecting pin part of the motor connector and the encoder connector)
Altitude		Lower than 1000 m

*1 Ambient temperature to be measured at 5 cm away from the motor.
*2 Permissible temperature for short duration such as transportation.
*3 These motors conform to the test conditions specified in EN standards (EN60529, EN60034-5). Do not use these motors in application where water proof performance is required such as continuous wash-down operation.
*4 This condition is applied when the connector mounting screw are tightened to the recommended tightening torque.
*5 Air containing water vapor will become saturated with water vapor as the temperature falls, causing dew.

<Note>
Initial setup of rotational direction:
positive = CCW and negative = CW.
Pay an extra attention.

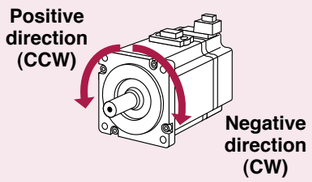

IP65	IP67
(1000 W or less) 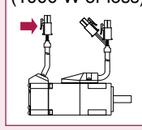	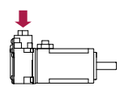

Notes on [Motor specification] page

Note) 1. **[At AC100 V of power voltage]**
Regenerative brake frequency represents the frequency of the motor's stops from the rated speed with deceleration without load.
- If the load is connected, frequency will be defines as 1/(m+1), where m=load moment of inertia/rotor moment of inertia.
- When the motor speed exceeds the rated speed, regenerative brake frequency is in inverse proportion to the square of (running speed/rated speed).
- Power supply voltage is AC115 V (at 100 V of the main voltage).
  If the supply voltage fluctuates, frequency is in inverse proportion to the square of (Running supply voltage/115) relative to the value in the table.
- When regeneration occurs continuously such cases as running speed frequently changes or vertical feeding, consult us or a dealer.

[At AC200 V of power voltage]
Regenerative brake frequency represents the frequency of the motor's stops from the rated speed with deceleration without load.
- If the load is connected, frequency will be defines as 1/(m+1), where m=load moment of inertia/rotor moment of inertia.
- When the motor speed exceeds the rated speed, regenerative brake frequency is in inverse proportion to the square of (running speed/rated speed).
- Power supply voltage is AC230 V (at 200 V of the main voltage).
  If the supply voltage fluctuates, frequency is in inverse proportion to the square of (Running supply voltage/230) relative to the value in the table.
- When regeneration occurs continuously such cases as running speed frequently changes or vertical feeding, consult us or a dealer.

Note) 2. If the effective torque is within the rated torque, there is no limit in generative brake.
Note) 3. Consult us or a dealer if the load moment of inertia exceeds the specified value.
Note) 4. Releasing time values represent the ones with DC-cutoff using a varistor.

Permissible Load at Output Shaft

The radial load is defined as a load applied to the output shaft in the right-angle direction. This load is generated when the gear head is coupled to the machine using a chain, belt, etc., but not when the gear head is directly connected to the coupling. As shown in the right figure, the permissible value is determined based on the load applied to the L/2 position of the output shaft. The thrust load is defined as a load applied to the output shaft in the axial direction.

Because the radial load and thrust load significantly affect the life of the bearing, take care not to allow the load during operation to exceed the permissible radial load and thrust load shown in the table below.

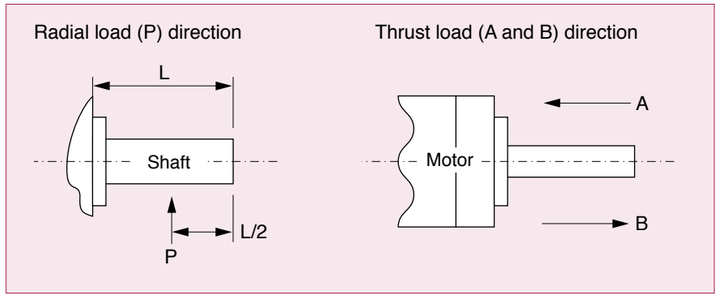

Built-in Holding Brake

In the applications where the motor drives the vertical axis, this brake would be used to hold and prevent the work (moving load) from falling by gravity while the power to the servo is shut off.

Use this built-in brake for "Holding" purpose only, that is to hold the stalling status. Never use this for "Brake" purpose to stop the load in motion.

- **Output Timing of BRK-OFF Signal**
  - For the brake release timing at power-on, or braking timing at Servo-OFF/Servo-Alarm while the motor is in motion, refer to the Operating Instructions (Overall).
  - With the parameter, Pr4.38 (Setup of mechanical brake action while the motor is in motion), you can set up a time between when the motor enters to a free-run from energized status and when BRK-OFF signal turns off (brake will be engaged), when the Servo-OFF or alarm occurs while the motor is in motion. For details, download a copy of the instruction manual from our website.

<Note>
1. The lining sound of the brake (chattering and etc.) might be generated while running the motor with built-in brake, however this does not affect any functionality.
2. Magnetic flux might be generated through the motor shaft while the brake coil is energized (brake is open). Pay an extra attention when magnetic sensors are used nearby the motor.

● **Specifications of Built-in Holding Brake**

Motor series	Motor output	Static friction torque N·m	Rotor inertia $\times 10^{-4}$ kg·m^2	Engaging time ms	Releasing time ms	Exciting current DC A (at cool-off)	Releasing voltage DC V / Exciting voltage DC V	Permissible work (J) per one braking	Permissible total work $\times 10^3$ J	Permissible angular acceleration rad/s^2
MSMF (80 mm sq. or less)	50 W,100 W	0.294 or more	0.002	35 or less	20 or less	0.30	1 or more / 24±1.2	39.2	4.9	30000
	200 W,400 W	1.27 or more	0.018	50 or less	15 or less	0.36		137	44.1	
	750 W	2.45 or more	0.075	70 or less	20 or less	0.42		196	147	
	1000 W	3.80 or more					1 or more / 24±2.4	185	80.0	
MSMF (100 mm sq. or more)	1.0 kW, 1.5 kW, 2.0 kW	8.0 or more	0.175	50 or less	15 or less	0.81 ±10 %	2 or more / 24±2.4	600	50	10000
	3.0 kW	12.0 or more		80 or less					900	
	4.0 kW	16.2 or more	1.12	110 or less	50 or less	0.90 ±10 %		1470	2160	
	5.0 kW	22.0 or more						1545	2000	
MQMF (80 mm sq. or less)	100 W	0.39 or more	0.018	15 or less	20 or less	0.30	1 or more / 24±2.4	105	44.1	30000
	200 W, 400 W	1.6 or more	0.075	70 or less		0.36		185	80	
MHMF (80 mm sq. or less)	50 W, 100 W	0.38 or more	0.002	35 or less	20 or less	0.30	1 or more / 24±2.4	39.2	4.9	30000
	200 W, 400 W	1.6 or more	0.018	50 or less		0.36		105	44.1	
	750 W, 1000 W	3.8 or more	0.075	70 or less		0.42		185	80	
MHMF (100 mm sq. or more)	1.0 kW, 1.5 kW	13.7 or more	1.12	100 or less	50 or less	0.79 ±10 %	2 or more / 24±2.4	1470	2160	10000
	2.0 kW, 3.0 kW, 4.0 kW	25.0 or more	4.7	80 or less	25 or less	1.29 ±10 %		1800	3000	5440
	5.0 kW	44.1 or more	4.1	150 or less	30 or less			1800	3100	5108
MDMF (100 mm sq. or more)	1.0 kW, 1.5 kW, 2.0 kW	13.7 or more	1.12	100 or less	50 or less	0.79 ±10 %	2 or more / 24±2.4	1470	2160	10000
	3.0 kW	22.0 or more		110 or less		0.90 ±10 %		1545	2000	
	4.0 kW	25.0 or more	4.7	80 or less	25 or less	1.29 ±10 %		1800	3000	5440
	5.0 kW	44.1 or more	4.1	150 or less	30 or less				3100	5108
MGMF (100 mm sq. or more)	0.85 kW, 1.3 kW, 1.8 kW	13.7 or more	1.12	100 or less	50 or less	0.79 ±10 %	2 or more / 24±2.4	1470	2160	10000
	2.9 kW	25.0 or more	4.7	80 or less	25 or less	1.29 ±10 %		1800	3000	5440
	4.4 kW	44.1 or more	3.93	150 or less	30 or less			1800	3100	5108

- Releasing time values represent the ones with DC-cutoff using a varistor.
- Above values (except static friction torque, releasing voltage and excitation current) represent typical values.
- Backlash of the built-in holding brake is kept ±1° or smaller at ex-factory point.
- Service life of the number of acceleration/deceleration with the above permissible angular acceleration is more than 10 million times. (Life end is defined as when the brake backlash drastically changes.)

Cable part No. Designation

Encoder Cable

1	2	3	4	5	6	7	8	9	10	11	12
M	F	E	C	A	0	0	5	0	M	J	D
Type classification					①				②	③	④

MFECA: Encoder cable

① Cable length

0030	3 m
0050	5 m
0100	10 m
0200	20 m

② Cable type

E	PVC cable with shield by Oki Electric Cable Co., 0.20 mm^2 × 4P(8-wire), 3P(6-wire)
M	Hitachi Cable, Ltd. Highly bendable type
T	Hitachi Cable, Ltd. Standard bendable type

③ Cable end (Encoder side)

A	Tyco Electronics Japan G.K. connector
J	Japan Aviation Electronics Industry, Ltd. connector (Direction of motor shaft)
K	Japan Aviation Electronics Industry, Ltd. connector (Opposite direction of motor shaft)
P	Japan Aviation Electronics Industry, Ltd. plug connector
S	"S" shaped cannonplug
T	Japan Aviation Electronics Industry, Ltd. plug connector

④ Cable end (Driver side)

D	Connector (Without battery box)
E	Connector (With battery box)

Motor Cable, Brake Cable

1	2	3	4	5	6	7	8	9	10	11	12
M	F	M	C	A	0	0	5	2	N	J	D
AC servo motor cable				①	②			③	④	⑤	⑥

① Type classification

A	Standard
B	Special
⋮	Design order

② Cable length

003	3 m
005	5 m
010	10 m
020	20 m

③ Sectional area of cable core

0	0.75 mm^2
1	1.25 mm^2
2	2.0 mm^2
3	3.5 mm^2

④ Cable type

ROBO-TOP® is a trade mark of DYDEN CORPORATION

E	ROBO-TOP® 4-wire by DYDEN CORPORATION
F	ROBO-TOP® 6-wire by DYDEN CORPORATION
G	ROBO-TOP® 2-wire by DYDEN CORPORATION
N	4-wire by Hitachi Cable, Ltd. (Highly bendable type)
R	2-wire by Hitachi Cable, Ltd. (Highly bendable type)
P	4-wire by Hitachi Cable, Ltd. (Standard bendable type)
S	2-wire by Hitachi Cable, Ltd. (Standard bendable type)
U	4-wire for A6 series small motor* (Highly bendable type)
V	6-wire for A6 series small motor* (Highly bendable type)
W	4-wire for A6 series small motor* (Standard bendable type)
X	6-wire for A6 series small motor* (Standard bendable type)

* 80 mm sq. or less

⑤ Cable end at motor side

C	S type cannon plug
E	Tyco Electronics Japan G.K. connector
F	Japan Aviation Electronics Industry, Ltd. connector (Direction of motor shaft)
G	Japan Aviation Electronics Industry, Ltd. connector (Opposite direction of motor shaft)
J	Japan Aviation Electronics Industry, Ltd. connector (Direction of motor shaft)
K	Japan Aviation Electronics Industry, Ltd. connector (Opposite direction of motor shaft)
U	Japan Aviation Electronics Industry, Ltd. plug connector

⑥ Cable end at driver side

D	Rod terminal
T	Clamp terminal

Specifications of Motor connector

50 W to 1000 W 80 mm sq. or less

● **When the motors of <MSMF, MQMF, MHMF (Leadwire type)> are used, they are connected as shown below.**
Connector: Tyco Electronics Japan G.K. (The figures below show connectors for the motor.)

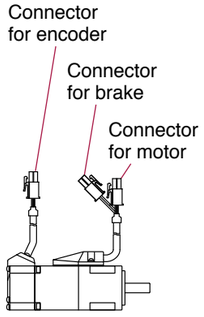

[Connector for encoder]

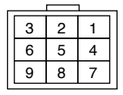

172169-1
23-bit Absolute

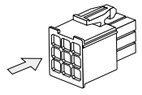

* Connector pin diagram is viewed from the direction of the arrow.

PIN No.	Application
1	BAT+*
2	BAT–*
3	FG(SHIELD)
4	PS
5	$\overline{PS}$
6	NC
7	E5V
8	E0V
9	NC

<Remarks>
Do not connect anything to NC.

* When using the motor as an incremental system, BAT+ and BAT– can be left unconnected.

[Connector for motor]

172167-1

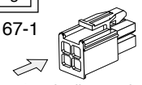

PIN No.	Application
1	U-phase
2	V-phase
3	W-phase
4	Ground

* Connector pin diagram is viewed from the direction of the arrow.

[Connector for Brake]

172165-1

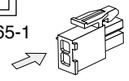

PIN No.	Application
1	Brake
2	Brake

* Electromagnetic brake is a nonpolar device.

* Connector pin diagram is viewed from the direction of the arrow.

● **When the motors of <MSMF, MQMF, MHMF (Connector type)> are used, they are connected as shown below.**
Connector: Made by Japan Aviation Electronics Industry, Ltd. (The figures below show connectors for the motor.)

Connector
for encoder

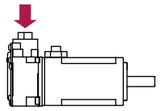

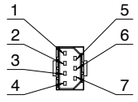

JN6CR07PM2
JN6CR07PM4
* Top view of the motor.

23-bit Absolute

PIN No.	Application
1	FG(SHIELD)
2	BAT–*
3	E0V
4	$\overline{PS}$
5	BAT+*
6	E5V
7	PS

Tightening torque of the screw (M2)
0.19 N·m to 0.21 N·m
* Be sure to use only the screw supplied with the connector, to avoid damage.

* When using the motor as an incremental system, BAT+ and BAT– can be left unconnected.

<MSMF>

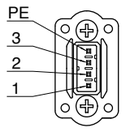

JN8AT04NJ1
* Top view of the motor.

PIN No.	Application
1	U-phase
2	V-phase
3	W-phase
PE	Ground

Tightening torque of the screw (M2)
0.085 N·m to 0.095 N·m (screwed to plastic)
* Be sure to use only the screw supplied with the connector, to avoid damage.
* Secure the gasket in place without removing it from the connector.

Connector
for motor

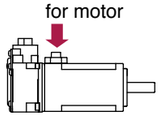

<MHMF 50 W, 100 W>

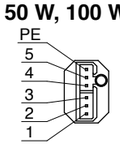

JN11AH06NN2
* Top view of the motor.

<MQMF, MHMF 200 W to 1000 W>

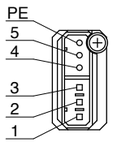

JN11AH06NN1
* Top view of the motor.

without Brake

PIN No.	Application
1	U-phase
2	V-phase
3	W-phase
4	NC
5	NC
PE	Ground

with Brake

PIN No.	Application
1	U-phase
2	V-phase
3	W-phase
4	Brake
5	Brake
PE	Ground

Tightening torque of the screw (M2)
0.085 N·m to 0.095 N·m
* Electromagnetic brake is a nonpolar device.
* Be sure to use only the screw supplied with the connector, to avoid damage.
* Secure the gasket in place without removing it from the connector.

<Remarks> Do not connect anything to NC.

[Motor with brake] **<MSMF>**

Connector for brake

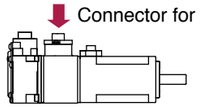

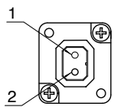

JN4AT02PJM-R
* Top view of the motor.

PIN No.	Application
1	Brake
2	Brake

Tightening torque of the screw (M2)
0.19 N·m to 0.21 N·m
* Electromagnetic brake is a nonpolar device.
* Be sure to use only the screw supplied with the connector, to avoid damage.
* Secure the gasket in place without removing it from the connector.

0.85 kW to 5.0 kW 100 mm sq. or more

● **When the motors of <MSMF, MDMF, MGMF, MHMF> are used, they are connected as shown below.**
Connector: Made by Japan Aviation Electronics Industry, Ltd. (The figures below show connectors for the motor.)

• Connector for encoder

**IP67 motor
Connector for encoder
(Large size)**

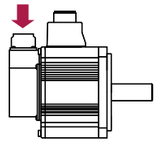

**IP67 motor
Connector for encoder
(Small size)**

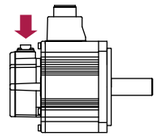

<Large size Encoder connector>

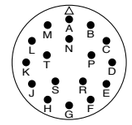

JL10-2A20-29P
23-bit Absolute

PIN No.	Application
A	NC
B	NC
C	NC
D	NC
E	NC
F	NC
G	E0V
H	E5V
J	FG(SHIELD)
K	PS
L	$\overline{PS}$
M	NC
N	NC
P	NC
R	NC
S	BAT– *
T	BAT+ *

<Small size Encoder connector>

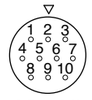

JN2AS10ML3-R
23-bit Absolute

PIN No.	Application
1	E0V
2	NC
3	PS
4	E5V
5	BAT– *
6	BAT+ *
7	$\overline{PS}$
8	NC
9	FG(SHIELD)
10	NC

<Remarks>
Do not connect anything to NC.

* When using the motor as an incremental system, BAT+ and BAT– can be left unconnected.

• Connector for motor/brake

Table for motor connector and brake connector

Motor part No.	Motor output	200 V without Brake	200 V with Brake
MSMF	1.0 kW to 2.0 kW	A	C
	3.0 kW to 5.0 kW	B	D
MDMF	1.0 kW to 2.0 kW	A	C
	3.0 kW to 5.0 kW	B	D

Motor part No.	Motor output	200 V without Brake	200 V with Brake
MGMF	0.85 kW to 1.8 kW	A	C
	2.9 kW to 4.4 kW	B	D
MHMF	1.0 kW to 1.5 kW	A	C
	2.0 kW to 5.0 kW	B	D

* Electromagnetic brake is a nonpolar device.

**Connector for
motor/brake**

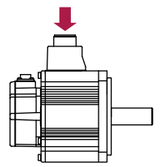

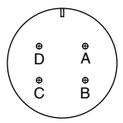

A
JL10-2E20-4PE-B

B
JL10-2E22-22PE-B

PIN No.	Application
A	U-phase
B	V-phase
C	W-phase
D	Ground

C
JL10-2E20-18PE-B

PIN No.	Application
G	with Brake : Brake without Brake : NC
H	with Brake : Brake without Brake : NC
A	NC
F	U-phase
I	V-phase
B	W-phase
E	Ground
D	Ground
C	NC

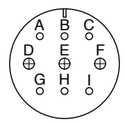

D
JL10-2E24-11PE-B

PIN No.	Application
A	with Brake : Brake without Brake : NC
B	with Brake : Brake without Brake : NC
C	NC
D	U-phase
E	V-phase
F	W-phase
G	Ground
H	Ground
I	NC

<Remarks> Do not connect anything to NC.

Encoder Cable

* It doesn't correspond to IP65 and IP67.

Part No.	MFECA0 ∗ ∗ 0EAD	80 mm sq. or less Applicable model	MSMF 50 W to 1000 W, MQMF 100 W to 400 W MHMF 50 W to 1000 W (Leadwire type)
Specifications	23-bit absolute encoder When used in incremental system (without battery box)		

[Unit: mm]

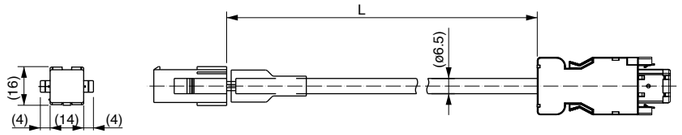

Title	Part No.	Manufacturer
Connector (Driver side)	3E206-0100 KV	Sumitomo 3M (or equivalent)
Shell kit	3E306-3200-008	
Connector (Motor side)	172161-1	Tyco Electronics Japan G.K.
Connector pin	170365-1	
Cable	0.20 mm²×3P (6-wire)	Oki Electric Cable Co., Ltd.

L (m)	Part No.(ex.)
3	MFECA0030EAD
5	MFECA0050EAD
10	MFECA0100EAD
20	MFECA0200EAD

Part No.	MFECA0 ∗ ∗ 0EAE	80 mm sq. or less Applicable model	MSMF 50 W to 1000 W, MQMF 100 W to 400 W MHMF 50 W to 1000 W (Leadwire type)
Specifications	23-bit absolute encoder When used in absolute system (with battery box) *		

* Battery is not included. Please buy the absolute encoder battery "DV0P2990" separately.

[Unit: mm]

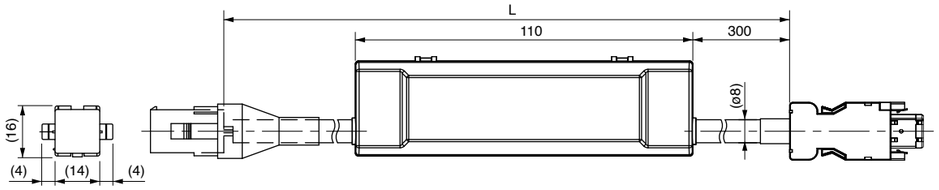

Title	Part No.	Manufacturer
Connector (Driver side)	3E206-0100 KV	Sumitomo 3M (or equivalent)
Shell kit	3E306-3200-008	
Connector (Motor side)	172161-1	Tyco Electronics Japan G.K.
Connector pin	170365-1	
Cable	0.20 mm²×4P (8-wire)	Oki Electric Cable Co., Ltd.

L (m)	Part No.(ex.)
3	MFECA0030EAE
5	MFECA0050EAE
10	MFECA0100EAE
20	MFECA0200EAE

Part No.	MFECA0 ∗ ∗ 0MJD (Highly bendable type, Direction of motor shaft) MFECA0 ∗ ∗ 0MKD (Highly bendable type, Opposite direction of motor shaft) MFECA0 ∗ ∗ 0TJD (Standard bendable type, Direction of motor shaft) MFECA0 ∗ ∗ 0TKD (Standard bendable type, Opposite direction of motor shaft)	80 mm sq. or less Applicable model	MSMF 50 W to 1000 W MQMF 100 W to 400 W MHMF 50 W to 1000 W (Connector type)
Specifications	23-bit absolute encoder When used in incremental system (without battery box)		

[Unit: mm]

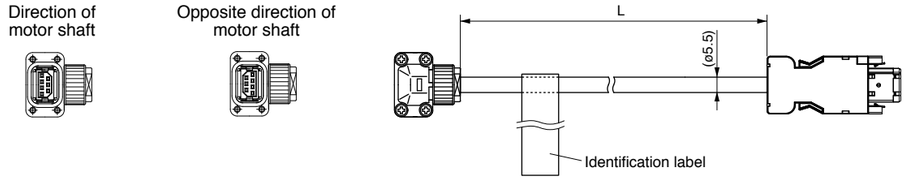

Title	Part No.	Manufacturer
Connector (Driver side)	3E206-0100 KV	Sumitomo 3M (or equivalent)
Shell kit	3E306-3200-008	
Connector (Motor side)	JN6FR07SM1	Japan Aviation Electronics Ind.
Connector pin	LY10-C1-A1-10000	
Cable	AWG24 4-wire, AWG22 2-wire (ø5.5)	Hitachi Cable, Ltd.

L (m)	Part No.(ex.)
3	MFECA0030MJD
5	MFECA0050MJD
10	MFECA0100MJD
20	MFECA0200MJD

Part No.	MFECA0 ∗ ∗ 0MJE (Highly bendable type, Direction of motor shaft) MFECA0 ∗ ∗ 0MKE (Highly bendable type, Opposite direction of motor shaft) MFECA0 ∗ ∗ 0TJE (Standard bendable type, Direction of motor shaft) MFECA0 ∗ ∗ 0TKE (Standard bendable type, Opposite direction of motor shaft)	80 mm sq. or less Applicable model	MSMF 50 W to 1000 W MQMF 100 W to 400 W MHMF 50 W to 1000 W (Connector type)
Specifications	23-bit absolute encoder When used in absolute system (with battery box) *		

* Battery is not included. Please buy the absolute encoder battery "DV0P2990" separately.

[Unit: mm]

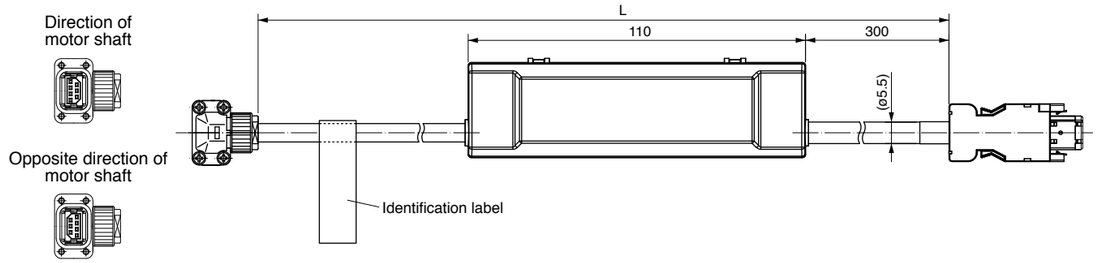

Title	Part No.	Manufacturer
Connector (Driver side)	3E206-0100 KV	Sumitomo 3M (or equivalent)
Shell kit	3E306-3200-008	
Connector (Motor side)	JN6FR07SM1	Japan Aviation Electronics Ind.
Connector pin	LY10-C1-A1-10000	
Cable	AWG24 4-wire、AWG22 2-wire (ϕ5.5)	Hitachi Cable, Ltd.

L (m)	Part No.(ex.)
3	MFECA0030MJE
5	MFECA0050MJE
10	MFECA0100MJE
20	MFECA0200MJE

Encoder Cable

* It doesn't correspond to IP65 and IP67.

Part No.	MFECA0 ∗ ∗ 0EPD	100 mm sq. or more Applicable model	0.85 kW to 5.0 kW
Specifications	23-bit absolute encoder When used in incremental system (without battery box) <Large one-touch lock type>		

[Unit: mm]

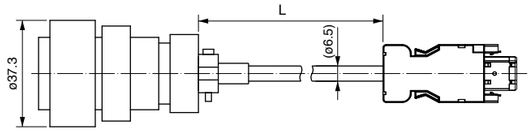

Title	Part No.	Manufacturer
Connector (Driver side)	3E206-0100 KV	Sumitomo 3M (or equivalent)
Shell kit	3E306-3200-008	
Connector (Motor side)	JL10-6A20-29S-EB	Japan Aviation Electronics Ind.
Cable clamp	JL04-2022CK(09)-R	
Cable	0.2 mm² ×3P (6-wire)	Oki Electric Cable Co., Ltd.

L (m)	Part No.(ex.)
3	MFECA0030EPD
5	MFECA0050EPD
10	MFECA0100EPD
20	MFECA0200EPD

Part No.	MFECA0 ∗ ∗ 0ESD	100 mm sq. or more Applicable model	0.85 kW to 5.0 kW
Specifications	23-bit absolute encoder When used in incremental system (without battery box) <Large screwed type>		

[Unit: mm]

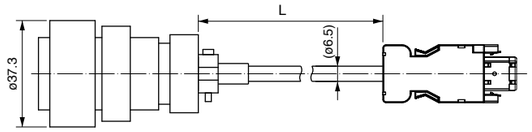

Title	Part No.	Manufacturer
Connector (Driver side)	3E206-0100 KV	Sumitomo 3M (or equivalent)
Shell kit	3E306-3200-008	
Connector (Motor side)	N/MS3106B20-29S	Japan Aviation Electronics Ind.
Cable clamp	N/MS3057-12A	
Cable	0.2 mm² ×3P (6-wire)	Oki Electric Cable Co., Ltd.

L (m)	Part No.(ex.)
3	MFECA0030ESD
5	MFECA0050ESD
10	MFECA0100ESD
20	MFECA0200ESD

Part No.	MFECA0 ∗ ∗ 0EPE	100 mm sq. or more Applicable model	0.85 kW to 5.0 kW (IP67 motor)
Specifications	23-bit absolute encoder When used in absolute system (with battery box) * <Large one-touch lock type>		

* Battery is not included. Please buy the absolute encoder battery “DV0P2990” separately.

[Unit: mm]

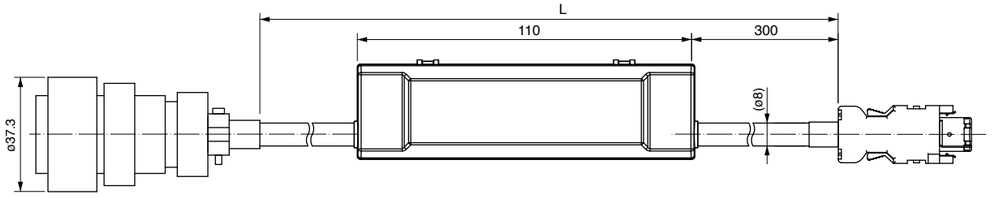

Title	Part No.	Manufacturer
Connector (Driver side)	3E206-0100 KV	Sumitomo 3M (or equivalent)
Shell kit	3E306-3200-008	
Connector (Motor side)	JL10-6A20-29S-EB	Japan Aviation Electronics Ind.
Cable clamp	JL04-2022CK(09)-R	
Cable	0.2 mm² ×3P (6-wire)	Oki Electric Cable Co., Ltd.

L (m)	Part No.(ex.)
3	MFECA0030EPE
5	MFECA0050EPE
10	MFECA0100EPE
20	MFECA0200EPE

Part No.	MFECA0 ∗ ∗ 0ESE	100 mm sq. or more Applicable model	0.85 kW to 5.0 kW (IP67 motor)
Specifications	23-bit absolute encoder When used in absolute system (with battery box) * <Large screwed type>		

* Battery is not included. Please buy the absolute encoder battery “DV0P2990” separately.

[Unit: mm]

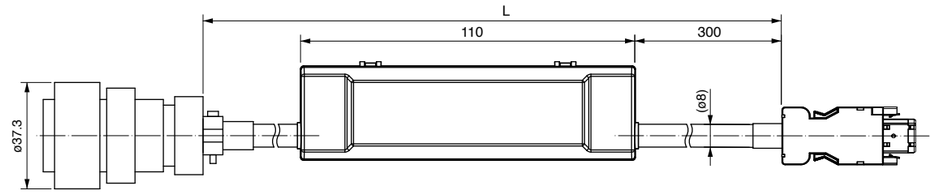

Title	Part No.	Manufacturer
Connector (Driver side)	3E206-0100 KV	Sumitomo 3M (or equivalent)
Shell kit	3E306-3200-008	
Connector (Motor side)	N/MS3106B20-29S	Japan Aviation Electronics Ind.
Cable clamp	N/MS3057-12A	
Cable	0.2 mm² ×4P (8-wire)	Oki Electric Cable Co., Ltd.

L (m)	Part No.(ex.)
3	MFECA0030ESE
5	MFECA0050ESE
10	MFECA0100ESE
20	MFECA0200ESE

Part No.	MFECA0 ∗ ∗ 0ETD	100 mm sq. or more Applicable model	0.85 kW to 5.0 kW (IP67 motor)
Specifications	23-bit absolute encoder When used in incremental system (without battery box) <Small one-touch lock type>		

[Unit: mm]

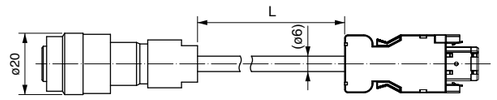

Title	Part No.	Manufacturer
Connector (Driver side)	3E206-0100 KV	Sumitomo 3M (or equivalent)
Shell kit	3E306-3200-008	
Connector (Motor side)	JN2DS10SL1-R	Japan Aviation Electronics Ind.
Connector pin	JN1-22-22S-PKG100	
Cable	0.2 mm² ×3P (6-wire)	Oki Electric Cable Co., Ltd.

L (m)	Part No.(ex.)
3	MFECA0030ETD
5	MFECA0050ETD
10	MFECA0100ETD
20	MFECA0200ETD

Part No.	MFECA0 ∗ ∗ 0ETE	100 mm sq. or more Applicable model	0.85 kW to 5.0 kW (IP67 motor)
Specifications	23-bit absolute encoder When used in absolute system (with battery box) * <Small one-touch lock type>		

* Battery is not included. Please buy the absolute encoder battery “DV0P2990” separately.

[Unit: mm]

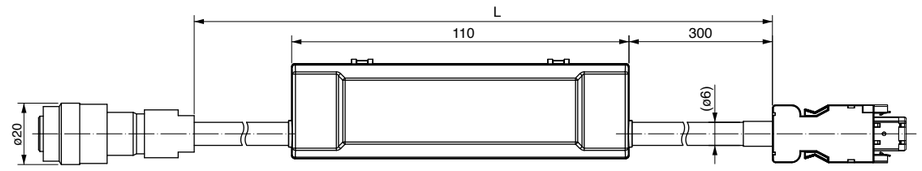

Title	Part No.	Manufacturer
Connector (Driver side)	3E206-0100 KV	Sumitomo 3M (or equivalent)
Shell kit	3E306-3200-008	
Connector (Motor side)	JN2DS10SL1-R	Japan Aviation Electronics Ind.
Connector pin	JN1-22-22S-PKG100	
Cable	0.2 mm² ×3P (6-wire)	Oki Electric Cable Co., Ltd.

L (m)	Part No.(ex.)
3	MFECA0030ETE
5	MFECA0050ETE
10	MFECA0100ETE
20	MFECA0200ETE

Motor Cable (without Brake)

* It doesn't correspond to IP65 and IP67.

Part No.	MFMCA0 ∗ ∗ 0EED	80 mm sq. or less Applicable model	MSMF 50 W to 1000 W, MQMF 100 W to 400 W MHMF 50 W to 1000 W (Leadwire type)

[Unit: mm]

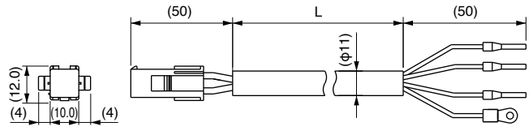

Title	Part No.	Manufacturer
Connector	172159-1	Tyco Electronics Japan G.K.
Cable clamp	170366-1	
Rod terminal	AI0.75-8GY	PHOENIX CONTACT
Nylon insulated round terminal	N1.25-M4	J.S.T Mfg. Co., Ltd.
Cable	ROBO-TOP 600V 0.75 mm² 4-wire	DYDEN CORPORATION

L (m)	Part No.(ex.)
3	MFMCA0030EED
5	MFMCA0050EED
10	MFMCA0100EED
20	MFMCA0200EED

Part No.		80 mm sq. or less Applicable model	
	MFMCA0 ∗ ∗ 0NJD (Highly bendable type, Direction of motor shaft)		MSMF 50 W to 1000 W (Connector type)
	MFMCA0 ∗ ∗ 0RJD (Standard bendable type, Direction of motor shaft)		
	MFMCA0 ∗ ∗ 0NKD (Highly bendable type, Opposite direction of motor shaft)		MSMF 200 W to 1000 W (Connector type)
	MFMCA0 ∗ ∗ 0RKD (Standard bendable type, Opposite direction of motor shaft)		

[Unit: mm]

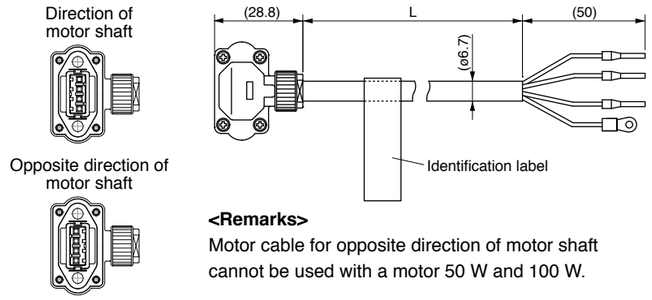

<Remarks>
Motor cable for opposite direction of motor shaft cannot be used with a motor 50 W and 100 W.

Title	Part No.	Manufacturer
Connector	JN8FT04SJ1	Japan Aviation Electronics Ind.
Cable clamp	ST-TMH-S-C1B-3500	
Rod terminal	AI0.75-8GY	PHOENIX CONTACT
Nylon insulated round terminal	N1.25-M4	J.S.T Mfg. Co., Ltd.
Cable	AWG18 4-wire (φ6.7 mm)	Hitachi Cable, Ltd.

L (m)	Part No.(ex.)
3	MFMCA0030NJD
5	MFMCA0050NJD
10	MFMCA0100NJD
20	MFMCA0200NJD

Part No.			80 mm sq. or less Applicable model	
	MFMCA0 ∗ ∗ 7UFD	(Movable/fixed common-use, direction of motor shaft)		MHMF 50 W, 100 W (Connector type)
	MFMCA0 ∗ ∗ 7UGD	(Movable/fixed common-use, opposite directionof motor shaft)		

[Unit: mm]

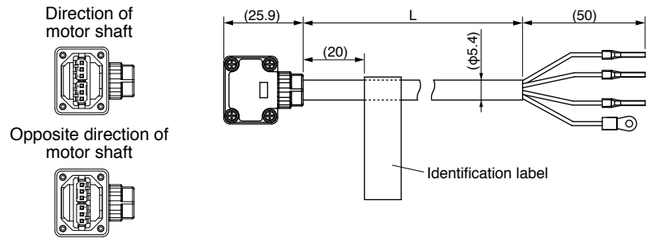

Title	Part No.	Manufacturer
Connector	JN11FH06SN2	Japan Aviation Electronics Ind.
Cable clamp	JN11S10K4A1	
Rod terminal	AI0.75-8GY	PHOENIX CONTACT
Nylon insulated round terminal	N1.25-M4	J.S.T Mfg. Co., Ltd.
Cable	AWG22 6-wire (φ5.4 mm)	NIKKO ELECTRIC WIRE CO.,LTD

L (m)	Part No.(ex.)
3	MFMCA0037UFD
5	MFMCA0057UFD
10	MFMCA0107UFD
20	MFMCA0207UFD

Part No.		80 mm sq. or less Applicable model	
	MFMCA0 ∗ ∗ 0UFD (Highly bendable type, Direction of motor shaft)		MQMF 100 W to 400 W MHMF 200 W to 1000 W (Connector type)
	MFMCA0 ∗ ∗ 0UGD (Highly bendable type, Opposite direction of motor shaft)		
	MFMCA0 ∗ ∗ 0WFD (Standard bendable type, Direction of motor shaft)		
	MFMCA0 ∗ ∗ 0WGD (Standard bendable type, Opposite direction of motor shaft)		

[Unit: mm]

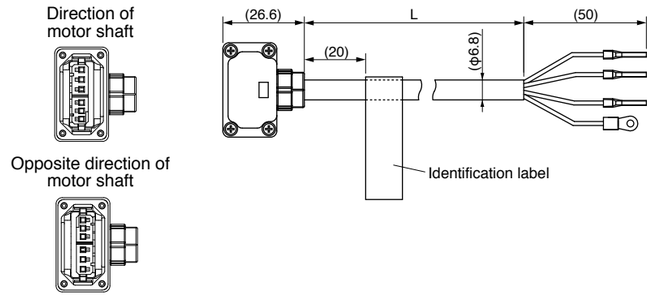

Title	Part No.	Manufacturer
Connector	JN11FH06SN1	Japan Aviation Electronics Ind.
Cable clamp	JN11S35H3A1	
Rod terminal	AI0.75-8GY	PHOENIX CONTACT
Nylon insulated round terminal	N1.25-M4	J.S.T Mfg. Co., Ltd.
Cable	AWG18 6-wire (φ6.8)	NIKKO ELECTRIC WIRE CO.,LTD

L (m)	Part No.(ex.)
3	MFMCA0030UFD
5	MFMCA0050UFD
10	MFMCA0100UFD
20	MFMCA0200UFD

Part No.	MFMCDO ∗ ∗ 2EUD	100 mm sq. or more Applicable model	MSMF 1.0 kW to 2.0 kW, MDMF 1.0 kW to 2.0 kW MHMF 1.0 kW, 1.5 kW, MGMF 0.85 kW to 1.8 kW <One-touch lock type>

[Unit: mm]

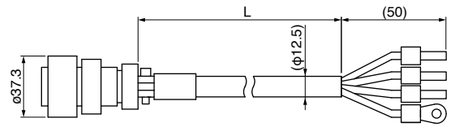

Title	Part No.	Manufacturer
Connector	JL10-6A20-4SE-EB	Japan Aviation Electronics Ind.
Cable clamp	JL04-2022CK(14)-R	
Rod terminal	NTUB-2	J.S.T Mfg. Co., Ltd.
Nylon insulated round terminal	N2-M4	J.S.T Mfg. Co., Ltd.
Cable	ROBO-TOP 600V 2.0mm² 4-wire	DYDEN CORPORATION

L (m)	Part No.(ex.)
3	MFMCD0032EUD
5	MFMCD0052EUD
10	MFMCD0102EUD
20	MFMCD0202EUD

Part No.	MFMCDO ∗ ∗ 2ECD	100 mm sq. or more Applicable model	MSMF 1.0 kW to 2.0 kW, MDMF 1.0 kW to 2.0 kW MHMF 1.0 kW, 1.5 kW, MGMF 0.85 kW to 1.8 kW <Screwed type>

[Unit: mm]

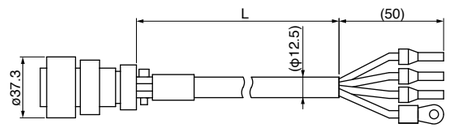

Title	Part No.	Manufacturer
Connector	JL04V-6A20-4SE-EB-R	Japan Aviation Electronics Ind.
Cable clamp	JL04-2022CK(14)-R	
Rod terminal	NTUB-2	J.S.T Mfg. Co., Ltd.
Nylon insulated round terminal	N2-M4	J.S.T Mfg. Co., Ltd.
Cable	ROBO-TOP 600V 2.0mm² 4-wire	DYDEN CORPORATION

L (m)	Part No.(ex.)
3	MFMCD0032ECD
5	MFMCD0052ECD
10	MFMCD0102ECD
20	MFMCD0202ECD

Motor Cable (without Brake)

* It doesn't correspond to IP65 and IP67.

Part No.	MFMCEO ∗ ∗ 2EUD	100 mm sq. or more Applicable model	MHMF 2.0 kW <One-touch lock type>

[Unit: mm]

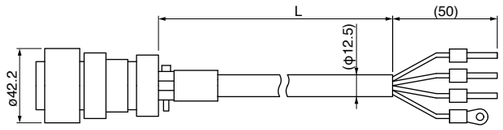

Title	Part No.	Manufacturer
Connector	JL10-6A22-22SE-EB	Japan Aviation Electronics Ind.
Cable clamp	JL04-2022CK(14)-R	
Rod terminal	NTUB-2	J.S.T Mfg. Co., Ltd.
Nylon insulated round terminal	N2-M4	J.S.T Mfg. Co., Ltd.
Cable	ROBO-TOP DP6/2501 2.0 mm² 4-wire	DYDEN CORPORATION

L (m)	Part No.(ex.)
3	MFMCE0032EUD
5	MFMCE0052EUD
10	MFMCE0102EUD
20	MFMCE0202EUD

Part No.	MFMCEO ∗ ∗ 2ECD	100 mm sq. or more Applicable model	MHMF 2.0 kW <Screwed type>

[Unit: mm]

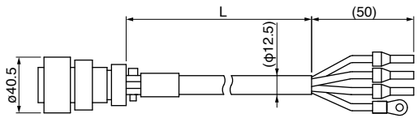

Title	Part No.	Manufacturer
Connector	JL04V-6A22-22SE-EB-R	Japan Aviation Electronics Ind.
Cable clamp	JL04-2022CK(14)-R	
Rod terminal	NTUB-2	J.S.T Mfg. Co., Ltd.
Nylon insulated round terminal	N2-M4	J.S.T Mfg. Co., Ltd.
Cable	ROBO-TOP 600V 2.0 mm² 4-wire	DYDEN CORPORATION

L (m)	Part No.(ex.)
3	MFMCE0032ECD
5	MFMCE0052ECD
10	MFMCE0102ECD
20	MFMCE0202ECD

Part No.	MFMCAO ∗ ∗ 3EUT	100 mm sq. or more Applicable model	MSMF 3.0 kW to 5.0 kW, MDMF 3.0 kW to 5.0 kW MHMF 3.0 kW to 5.0 kW, MGMF 2.9 kW to 4.4 kW <One-touch lock type>

[Unit: mm]

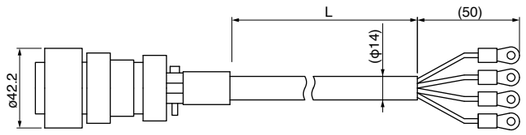

Title	Part No.	Manufacturer
Connector	JL10-6A22-11SE-EB	Japan Aviation Electronics Ind.
Cable clamp	JL04-2022CK(14)-R	
Nylon insulated round terminal	N5.5-5	J.S.T Mfg. Co., Ltd.
Cable	ROBO-TOP DP6/2501 3.5 mm² 4-wire	DYDEN CORPORATION

L (m)	Part No.(ex.)
3	MFMCA0033EUT
5	MFMCA0053EUT
10	MFMCA0103EUT
20	MFMCA0203EUT

Part No.	MFMCAO ∗ ∗ 3ECT	100 mm sq. or more Applicable model	MSMF 3.0 kW to 5.0 kW, MDMF 3.0 kW to 5.0 kW MHMF 3.0 kW to 5.0 kW, MGMF 2.9 kW to 4.4 kW <Screwed type>

[Unit: mm]

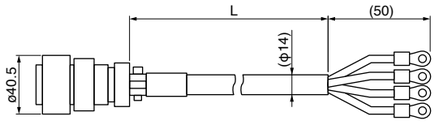

Title	Part No.	Manufacturer
Connector	JL04V-6A22-22SE-EB-R	Japan Aviation Electronics Ind.
Cable clamp	JL04-2022CK(14)-R	
Nylon insulated round terminal	N5.5-5	J.S.T Mfg. Co., Ltd.
Cable	ROBO-TOP 600V 3.5 mm² 4-wire	DYDEN CORPORATION

L (m)	Part No.(ex.)
3	MFMCA0033ECT
5	MFMCA0053ECT
10	MFMCA0103ECT
20	MFMCA0203ECT

Motor Cable (with Brake)

* It doesn't correspond to IP65 and IP67.

Part No.	MFMCA0 ∗ ∗ 7VFD	(Movable/fixed common-use, direction of motor shaft)	80 mm sq. or less Applicable model	MHMF 50 W, 100 W (Connector type)
	MFMCA0 ∗ ∗ 7VGD	(Movable/fixed common-use, opposite directionof motor shaft)		

[Unit: mm]

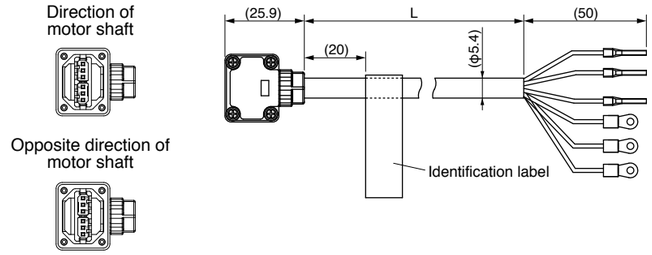

Title	Part No.	Manufacturer
Connector	JN11FH06SN2	Japan Aviation Electronics Ind.
Cable clamp	JN11S10K4A1	
Rod terminal	AI0.75-8GY	PHOENIX CONTACT
Nylon insulated round terminal	N1.25-M4	J.S.T Mfg. Co., Ltd.
Cable	AWG22 6-wire（φ5.4 mm）	NIKKO ELECTRIC WIRE CO.,LTD

L (m)	Part No.(ex.)
3	MFMCA0037VFD
5	MFMCA0057VFD
10	MFMCA0107VFD
20	MFMCA0207VFD

Part No.	MFMCA0 ∗ ∗ 0VFD (Highly bendable type, Direction of motor shaft) MFMCA0 ∗ ∗ 0VGD (Highly bendable type, Opposite direction of motor shaft) MFMCA0 ∗ ∗ 0XFD (Standard bendable type, Direction of motor shaft) MFMCA0 ∗ ∗ 0XGD (Standard bendable type, Opposite direction of motor shaft)	80 mm sq. or less Applicable model	MQMF 100 W to 400 W MHMF 200 W to 1000 W (Connector type)

[Unit: mm]

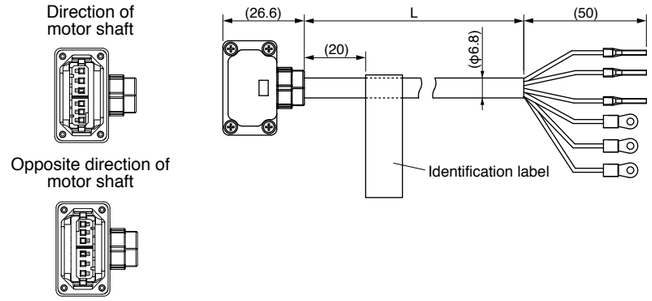

Title	Part No.	Manufacturer
Connector	JN11FH06SN1	Japan Aviation Electronics Ind.
Cable clamp	JN11S35H3A1	
Rod terminal	AI0.75-8GY	PHOENIX CONTACT
Nylon insulated round terminal	N1.25-M4	J.S.T Mfg. Co., Ltd.
Cable	AWG18 6-wire（φ6.8 mm）	NIKKO ELECTRIC WIRE CO.,LTD

L (m)	Part No.(ex.)
3	MFMCA0030VFD
5	MFMCA0050VFD
10	MFMCA0100VFD
20	MFMCA0200VFD

Motor Cable (with Brake)

* It doesn't correspond to IP65 and IP67.

Part No.	MFMCA0 ∗ ∗ 2FUD	100 mm sq. or more Applicable model	MSMF 1.0 kW to 2.0 kW, MDMF 1.0 kW to 2.0 kW MHMF 1.0 kW to 1.5 kW, MGMF 0.85 kW to 1.8 kW <One-touch lock type>

[Unit: mm]

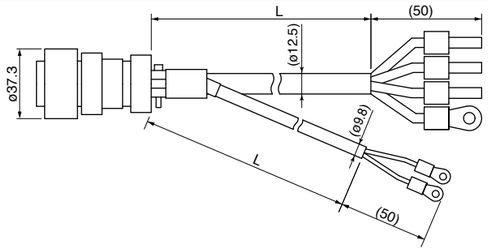

Title		Part No.	Manufacturer
Connector		JL10-6A20-18SE-EB	Japan Aviation Electronics Ind.
Cable clamp		JL042022CK(14)-R	
Rod terminal		NTUB-2	J.S.T Mfg. Co., Ltd.
Nylon insulated round terminal	Earth	N2-M4	J.S.T Mfg. Co., Ltd.
	Brake	N1.25-M4	
Cable		ROBO-TOP 600V 2.0 mm² 4-wire ROBO-TOP 600V 0.75 mm² 2-wire	DYDEN CORPORATION

L (m)	Part No.(ex.)
3	MFMCA0032FUD
5	MFMCA0052FUD
10	MFMCA0102FUD
20	MFMCA0202FUD

Part No.	MFMCA0 ∗ ∗ 2FCD	100 mm sq. or more Applicable model	MSMF 1.0 kW to 2.0 kW, MDMF 1.0 kW to 2.0 kW MHMF 1.0 kW to 1.5 kW, MGMF 0.85 kW to 1.8 kW <Screwed type>

[Unit: mm]

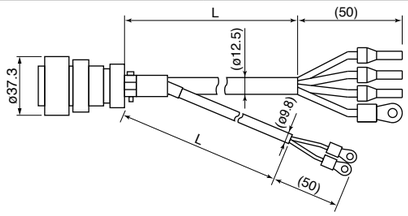

Title		Part No.	Manufacturer
Connector		JL04V-6A20-18SE-EB-R	Japan Aviation Electronics Ind.
Cable clamp		JL04-2022CK(14)-R	
Rod terminal		NTUB-2	J.S.T Mfg. Co., Ltd.
Nylon insulated round terminal	Earth	N2-M4	J.S.T Mfg. Co., Ltd.
	Brake	N1.25-M4	
Cable		ROBO-TOP 600V 2.0 mm² 4-wire ROBO-TOP 600V 0.75 mm² 2-wire	DYDEN CORPORATION

L (m)	Part No.(ex.)
3	MFMCA0032FCD
5	MFMCA0052FCD
10	MFMCA0102FCD
20	MFMCA0202FCD

Part No.	MFMCE0 ∗ ∗ 2FUD	100 mm sq. or more Applicable model	MHMF 2.0 kW <One-touch lock type>

[Unit: mm]

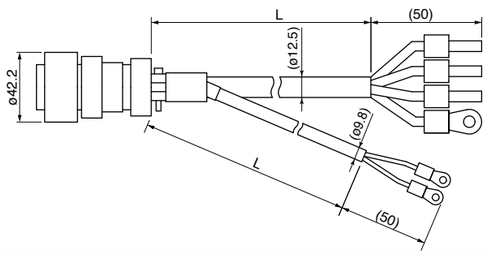

Title		Part No.	Manufacturer
Connector		JL10-6A24-11SE-EB	Japan Aviation Electronics Ind.
Cable clamp		JL04-2428CK(17)-R	
Rod terminal		NTUB-2	J.S.T Mfg. Co., Ltd.
Nylon insulated round terminal	Earth	N2-M4	J.S.T Mfg. Co., Ltd.
	Brake	N1.25-M4	
Cable		ROBO-TOP DP6/2501 2.0 mm² 4-wire ROBO-TOP DP6/2501 0.75 mm² 2-wire	DYDEN CORPORATION

L (m)	Part No.(ex.)
3	MFMCE0032FUD
5	MFMCE0052FUD
10	MFMCE0102FUD
20	MFMCE0202FUD

Part No.	MFMCE0 ∗ ∗ 2FCD	100 mm sq. or more Applicable model	MHMF 2.0 kW <Screwed type>

[Unit: mm]

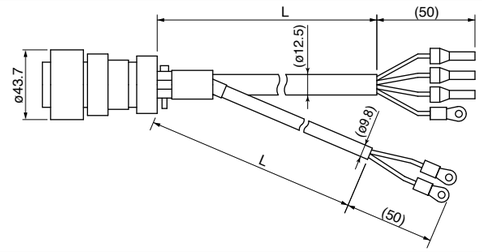

Title		Part No.	Manufacturer
Connector		JL04V-6A24-11SE-EB-R	Japan Aviation Electronics Ind.
Cable clamp		JL04-2428CK(17)-R	
Rod terminal		NTUB-2	J.S.T Mfg. Co., Ltd.
Nylon insulated round terminal	Earth	N2-M4	J.S.T Mfg. Co., Ltd.
	Brake	N1.25-M4	
Cable		ROBO-TOP 600V 2.0 mm² 4-wire ROBO-TOP 600V 0.75 mm² 2-wire	DYDEN CORPORATION

L (m)	Part No.(ex.)
3	MFMCE0032FCD
5	MFMCE0052FCD
10	MFMCE0102FCD
20	MFMCE0202FCD

Part No.	MFMCA0 ∗ ∗ 3FUT	100 mm sq. or more Applicable model	MSMF 3.0 kW to 5.0 kW, MDMF 3.0 kW to 5.0 kW MHMF 3.0 kW to 5.0 kW, MGMF 2.9 kW, 4.4 kW <One-touch lock type>

[Unit: mm]

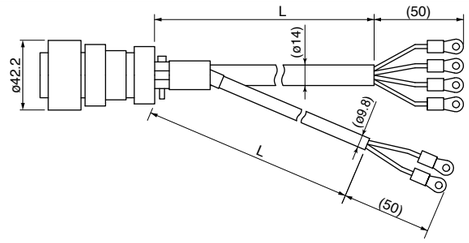

Title		Part No.	Manufacturer
Connector		JL10-6A24-11SE-EB	Japan Aviation Electronics Ind.
Cable clamp		JL04-2428CK(17)-R	
Nylon insulated round terminal	Earth	N5.5-5	J.S.T Mfg. Co., Ltd.
	Brake	N1.25-M4	
Cable		ROBO-TOP DP6/2501 3.5 mm² 4-wire ROBO-TOP DP6/2501 0.75 mm² 2-wire	DYDEN CORPORATION

L (m)	Part No.(ex.)
3	MFMCA0033FUT
5	MFMCA0053FUT
10	MFMCA0103FUT
20	MFMCA0203FUT

Part No.	MFMCA0 ∗ ∗ 3FCT	100 mm sq. or more Applicable model	MSMF 3.0 kW to 5.0 kW, MDMF 3.0 kW to 5.0 kW MHMF 3.0 kW to 5.0 kW, MGMF 2.9 kW, 4.4 kW <Screwed type>

[Unit: mm]

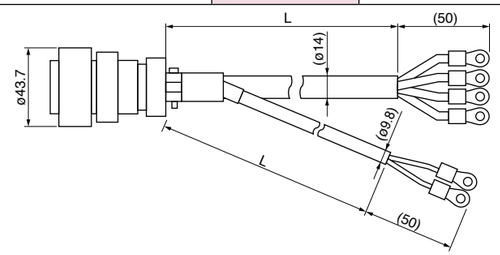

This product does not correspond to IP67.

Title		Part No.	Manufacturer
Connector		JL04V-6A24-11SE-EB-R	Japan Aviation Electronics Ind.
Cable clamp		JL04-2428CK(17)-R	
Nylon insulated round terminal	Earth	N5.5-5	J.S.T Mfg. Co., Ltd.
	Brake	N1.25-M4	
Cable		ROBO-TOP 600V 3.5 mm² 4-wire ROBO-TOP 600V 0.75 mm² 2-wire	DYDEN CORPORATION

L (m)	Part No.(ex.)
3	MFMCA0033FCT
5	MFMCA0053FCT
10	MFMCA0103FCT
20	MFMCA0203FCT

Brake Cable

* It doesn't correspond to IP65 and IP67.

Part No.	MFMCB0 ∗ ∗ 0GET	80 mm sq. or less Applicable model	MSMF 50 W to 1000 W, MQMF 100 W to 400 W MHMF 50 W to 1000 W (Leadwire type)

[Unit: mm]

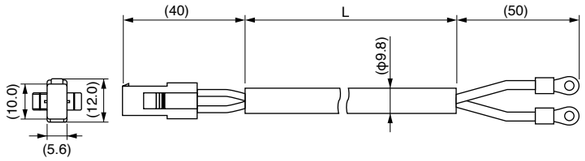

Title	Part No.	Manufacturer
Connector	172157-1	Tyco Electronics Japan G.K.
Connector pin	170366-1, 170362-1	
Nylon insulated round terminal	N1.25-M4	J.S.T Mfg. Co., Ltd.
Cable	ROBO-TOP 600V 0.75 mm² 2-wire	DYDEN CORPORATION

L (m)	Part No.(ex.)
3	MFMCB0030GET
5	MFMCB0050GET
10	MFMCB0100GET
20	MFMCB0200GET

Part No.		80 mm sq. or less Applicable model	
	MFMCB0 ∗ ∗ 0PJT (Highly bendable type, Direction of motor shaft)		MSMF 50 W to 1000 W (Connector type)
	MFMCB0 ∗ ∗ 0PKT (Highly bendable type, Opposite direction of motor shaft)		
	MFMCB0 ∗ ∗ 0SJT (Standard bendable type, Direction of motor shaft)		
	MFMCB0 ∗ ∗ 0SKT (Standard bendable type, Opposite direction of motor shaft)		

[Unit: mm]

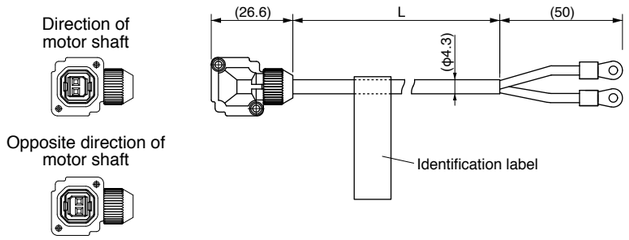

Title	Part No.	Manufacturer
Connector	JN4FT02SJMR	Japan Aviation Electronics Ind.
Connector pin	ST-TMH-S-C1B-3500	
Nylon insulated round terminal	N1.25-M4	J.S.T Mfg. Co., Ltd.
Cable	AWG22 2-wire (φ4.3)	Hitachi Cable, Ltd.

L (m)	Part No.(ex.)
3	MFMCB0030PJT
5	MFMCB0050PJT
10	MFMCB0100PJT
20	MFMCB0200PJT

Interface Cable

Cable for Interface

Part No.	DV0P4360

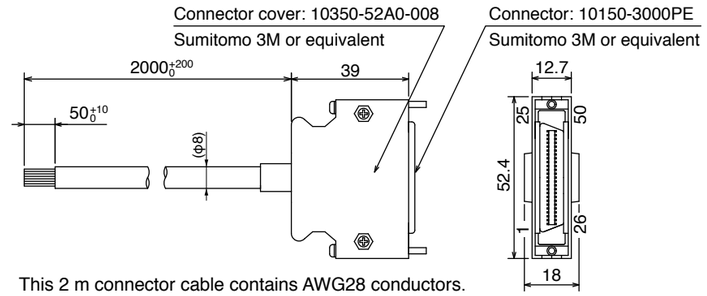

This 2 m connector cable contains AWG28 conductors.

[Unit: mm]

• Table for wiring

Pin No.	color	Pin No.	color	Pin No.	color	Pin No.	color	Pin No.	color
1	Orange (Red1)	11	Orange (Black2)	21	Orange (Red3)	31	Orange (Red4)	41	Orange (Red5)
2	Orange (Black1)	12	Yellow (Black1)	22	Orange (Black3)	32	Orange (Black4)	42	Orange (Black5)
3	Gray (Red1)	13	Gray (Red2)	23	Gray (Red3)	33	Gray (Red4)	43	Gray (Red5)
4	Gray (Black1)	14	Gray (Black2)	24	Gray (Black3)	34	White (Red4)	44	White (Red5)
5	White (Red1)	15	White (Red2)	25	White (Red3)	35	White (Black4)	45	White (Black5)
6	White (Black1)	16	Yellow (Red2)	26	White (Black3)	36	Yellow (Red4)	46	Yellow (Red5)
7	Yellow (Red1)	17	Yel (Blk2)/Pink (Blk2)	27	Yellow (Red3)	37	Yellow (Black4)	47	Yellow (Black5)
8	Pink (Red1)	18	Pink (Red2)	28	Yellow (Black3)	38	Pink (Red4)	48	Pink (Red5)
9	Pink (Black1)	19	White (Black2)	29	Pink (Red3)	39	Pink (Black4)	49	Pink (Black5)
10	Orange (Red2)	20	–	30	Pink (Black3)	40	Gray (Black4)	50	Gray (Black5)

<Remarks>

Color designation of the cable e.g.) Pin-1 Cable color : Orange (Red1) : One red dot on the cable
The shield of this cable is connected to the connector shell but not to the terminal.

Interface Conversion Cable

Part No.	DV0P4120, 4121, 4130, 4131, 4132

Interface cables for old product (XX series or V series) can be connected to the current product by using the connector conversion cable shown below.

DV0P4120	MINAS XX → A6 series (A5Ⅱ, A5, A4, A series) for position control/ velocity control
DV0P4121	MINAS XX → A6 series (A5Ⅱ, A5, A4, A series) for torque control
DV0P4130	MINAS V → A6 series (A5Ⅱ, A5, A4, A series) for position control
DV0P4131	MINAS V → A6 series (A5Ⅱ, A5, A4, A series) for velocity control
DV0P4132	MINAS V → A6 series (A5Ⅱ, A5, A4, A series) for torque control

* For details of wiring, contact our sales department.

Converts 36-pin configuration to 50-pin.

[Unit: mm]

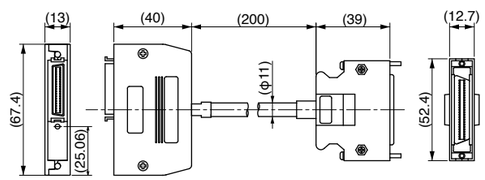

<DV0P4120, 4121>

[Unit: mm]

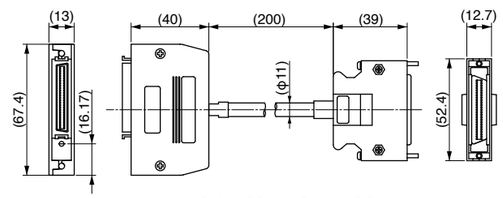

<DV0P4130, 4131, 4132>

Connector Kit

Connector Kit for Communication Cable (for RS485, RS232) (Excluding A6 SE Series)

Part No.	DV0PM20024

• **Components**

Title	Part No.	Manufacturer	Note
Connector	2040008-1	Tyco Electronics Japan G.K.	For Connector X2 (8-pins)

• Pin disposition of connector, connector X2

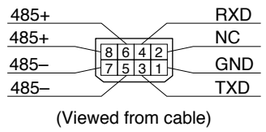

<Remarks>
Do not connect anything to NC.

• Dimensions [Unit: mm]

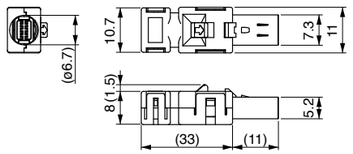

Connector Kit for Safety (Excluding A6 SE, A6 SG Series)

Part No.	DV0PM20025

• **Components**

Title	Part No.	Manufacturer	Note
Connector	2013595-1	Tyco Electronics Japan G.K.	For Connector X3 (8-pins)

• Pin disposition of connector, connector X3

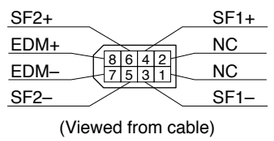

<Remarks>
Do not connect anything to NC.

• Dimensions [Unit: mm]

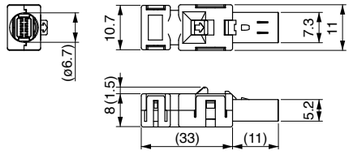

Safety bypass plug (Excluding A6 SE, A6 SG Series)

Part No.	DV0PM20094

• **Components**

Title	Part No.	Manufacturer	Note
Connector	CIF-PB08AK-GF1R	J.S.T Mfg. Co., Ltd.	For Connector X3

• Internal wiring
(Wiring of the following has been applied inside the plug.)

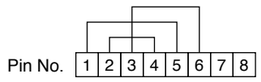

• Dimensions (Resin color : black) [Unit: mm]

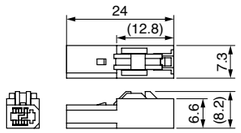

<Remarks>
• For crimp tool etc., necessary to produce a cable, access the web site of the manufacturer or consult with the manufacturer for details. For inquiries of manufacturer, refer to P.200 "List of Peripheral Equipments".

Connector Kit for Interface

Part No.	DV0P4350

• **Components**

Title	Part No.	Number	Manufacturer	Note
Connector	10150-3000PE	1	Sumitomo 3M (or equivalent)	For Connector X4 (50-pins)
Connector cover	10350-52A0-008	1		

• Pin disposition (50 pins) (viewed from the soldering side)

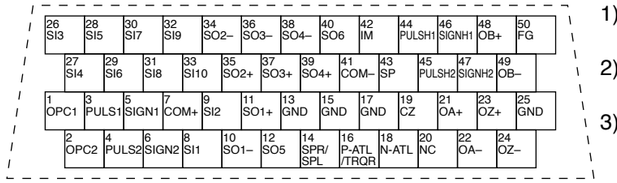

1) Check the stamped pin-No. on the connector body while making a wiring.
2) For the function of each signal title or its symbol, refer to the operating manual.
3) Do not connect anything to NC pins in the above table.

Connector Kit for External Scale (Excluding A6 SE, A6 SG Series)

Part No.	DV0PM20026

• **Components**

Title	Part No.	Manufacturer	Note
Connector	MUF-PK10K-X	J.S.T Mfg. Co., Ltd.	For Connector X5 (10-pins)

• Pin disposition of connector, connector X5

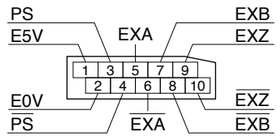

• Dimensions [Unit: mm]

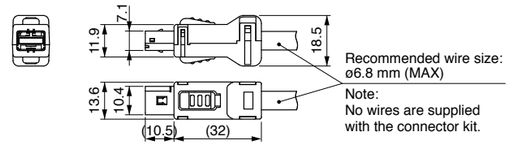

Connector Kit for Encoder

Part No.	DV0PM20010

• **Components**

Title	Part No.	Manufacturer	Note
Connector (Driver side)	3E206-0100 KV	Sumitomo 3M (or equivalent)	For Connector X6
Shell kit	3E306-3200-008		

• Pin disposition of connector, connector X6

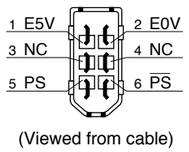

Shell: FG

<Remarks>
Do not connect anything to NC.

• Dimensions [Unit: mm]

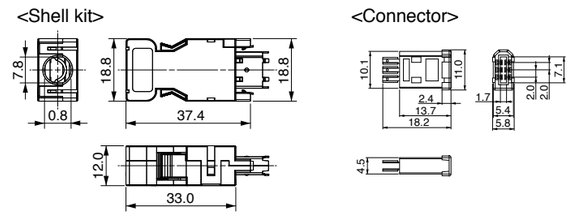

<Remarks>
Connector X1: use with commercially available cable.

• Configuration of connector X1: USB mini-B

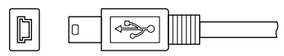

Connector Kit

Connector Kit for Power Supply Input

Part No.	DV0PM20032 (For A-frame to D-frame: Single row type)

● Please refer to the Dimensions of driver P.47 for connector XA.

• **Components**

Title	Part No.	Number	Manufacturer	Note
Connector	05JFAT-SAXGF	1	J.S.T Mfg. Co., Ltd.	For Connector XA
Handle lever	J-FAT-OT	2		

Part No.	DV0PM20033 (For A-frame to D-frame: Double row type)

• **Components**

Title	Part No.	Number	Manufacturer	Note
Connector	05JFAT-SAXGSA-C	1	J.S.T Mfg. Co., Ltd.	For Connector XA
Handle lever	J-FAT-OT	2		

• Dimensions

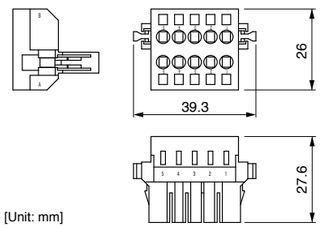

Driver part No.	Power supply	Rated input current
MADL∗01∗∗	Single phase 100 V	1.7 A
MADL∗11∗∗	Single phase 100 V	2.0 A
MADL∗05∗∗	Single phase/3-phase 200 V	1.6 A/0.9 A
MADL∗15∗∗	Single phase/3-phase 200 V	2.0 A/1.1 A
MBDL∗21∗∗	Single phase 100 V	4.5 A
MBDL∗25∗∗	Single phase/3-phase 200 V	3.7 A/2.1 A
MCDL∗31∗∗	Single phase 100 V	7.0 A
MCDL∗35∗∗	Single phase/3-phase 200 V	6.4 A/3.4 A
MDDL∗45∗∗	Single phase/3-phase 200 V	7.9 A/4.6 A
MDDL∗55∗∗	Single phase/3-phase 200 V	13.6 A/7.2 A

* When connection multiple axes in series, make sure the sum of the current value does not exceed the rated current (11.25 A) of DV0PM20033.

Remarks

When using drivers MDDL∗55∗∗ in single-phase power supply, do not use DV0PM20033.

Part No.	DV0PM20044 (For E-frame)

• **Components**

Title	Part No.	Number	Manufacturer	Note
Connector	05JFAT-SAXGSA-L	1	J.S.T Mfg. Co., Ltd.	For Connector XA
Handle lever	J-FAT-OT-L	2		

Connector Kit for Regenerative Resistor Connection

Part No.	DV0PM20045 (For E-frame)

• **Components**

Title	Part No.	Number	Manufacturer	Note
Connector	04JFAT-SAXGSA-L	1	J.S.T Mfg. Co., Ltd.	200 V: For Connector XC * Jumper wire is included.
Handle lever	J-FAT-OT-L	2		

<Remarks>

• For crimp tool etc., necessary to produce a cable, access the web site of the manufacturer or consult with the manufacturer for details. For inquiries of manufacturer, refer to P.200 "List of Peripheral Equipments".

Connector Kit for Motor/Encoder Connection

Connector Kit for Motor Connection (Driver side)

Part No.	DV0PM20034 (For A-frame to D-frame)

● Please refer to the Dimensions of driver P.47 for connector XB.

• **Components**

Title	Part No.	Number	Manufacturer	Note
Connector	06JFAT-SAXGF	1	J.S.T Mfg. Co., Ltd.	For Connector XB * Jumper wire is included.
Handle lever	J-FAT-OT	2		

Part No.	DV0PM20046 (For E-frame)

● Please refer to the Dimensions of driver P.49 for connector XB.

• **Components**

Title	Part No.	Number	Manufacturer	Note
Connector	03JFAT-SAXGSA-L	1	J.S.T Mfg. Co., Ltd.	For Connector XB
Handle lever	J-FAT-OT-L	2		

Connector Kit for Motor/Encoder Connection

* When IP65 or IP67 are necessary, the customer must give appropriate processing.

Part No.	DV0P4290	80 mm sq. or less Applicable model	MSMF 50 W to 1000 W *, MQMF 100 W to 400 W MHMF 50 W to 1000 W * (Leadwire type IP65)

* MSMF092L1□2, MHMF092L1□□

• **Components**

Title	Part No.	Number	Manufacturer	Note
Connector (Driver side)	3E206-0100 KV	1	Sumitomo 3M (or equivalent)	For Connector X6 (6-pins)
Shell kit	3E306-3200-008	1		
Connector	172161-1	1	Tyco Electronics Japan G.K.	For Encoder cable (9-pins)
Connector pin	170365-1	9		
Connector	172159-1	1	Tyco Electronics Japan G.K.	For Motor cable (4-pins)
Connector pin	170366-1	4		

• Pin disposition of connector, connector X6

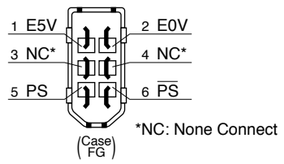

• Pin disposition of connector for encoder cable

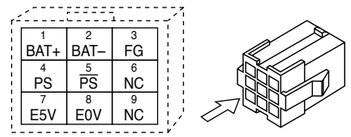

• Pin disposition of connector for motor cable

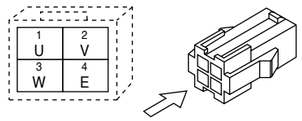

* When you connect the battery for absolute encoder, refer to P.194, "When you make your own cable for 23-bit absolute encoder"

<Remarks>

• For crimp tool etc., necessary to produce a cable, access the web site of the manufacturer or consult with the manufacturer for details. For inquiries of manufacturer, refer to P.200 "List of Peripheral Equipments".

Connector Kit for Motor/Encoder Connection

Part No.	DV0PM20035	80 mm sq. or less Applicable model	MSMF 50 W to 1000 W * (Connector type IP67)

* MSMF092L1□1

• **Components**

Title	Part No.	Number	Manufacturer	Note
Connector (Driver side)	3E206-0100 KV	1	Sumitomo 3M (or equivalent)	For Connector X6 (6-pins)
Shell kit	3E306-3200-008	1		
Encoder connector	JN6FR07SM1	1	Japan Aviation Electronics Ind.	For Encoder cable (7-pins)
Socket contact	LY10-C1-A1-10000	7		
Motor connector	JN8FT04SJ1	1	Japan Aviation Electronics Ind.	For Motor cable (4-pins)
Socket contact	ST-TMH-S-C1B-3500	4		

• Pin disposition of connector connector X6

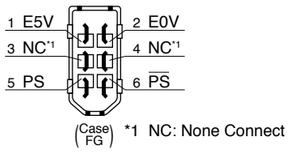

• Pin disposition of connector for encoder cable

[Direction of motor shaft]

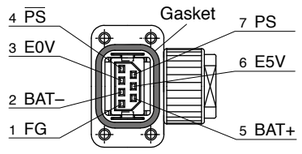

• Pin disposition of connector for motor cable

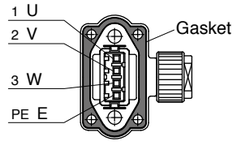

[Opposite direction of motor shaft]

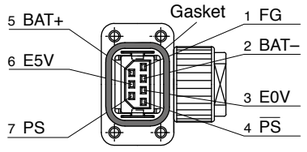

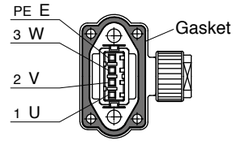

<Remarks>
Secure the gasket in place without removing it from the connector.
Otherwise, the degree of protection of IP67 will not be guaranteed.

* Pins 2 and 5 are left unused (NC) when used in incremental system.

<Remarks>
• For crimp tool etc., necessary to produce a cable, access the web site of the manufacturer or consult with the manufacturer for details. For inquiries of manufacturer, refer to P.200 "List of Peripheral Equipments".

Part No.	DV0PM24581	80 mm sq. or less Applicable model	MHMF 50 W, 100 W (Connector type IP67)

• **Components**

Title	Part No.	Number	Manufacturer	Note
Connector (Driver side)	3E206-0100 KV	1	Sumitomo 3M (or equivalent)	For Connector X6 (6-pins)
Shell kit	3E306-3200-008	1		
Encoder connector	JN6FR07SM1	1	Japan Aviation Electronics Ind.	For Encoder cable (7-pins)
Socket contact	LY10-C1-A1-10000	7		
Motor connector	JN11FH06SN2	1	Japan Aviation Electronics Ind.	For Motor cable (6-pins)
Socket contact	JN11S10K4A1	6		

• Pin disposition of connector connector X6

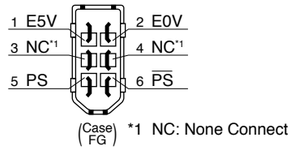

• Pin disposition of connector for encoder cable

[Direction of motor shaft]

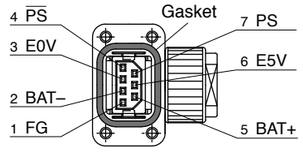

• Pin disposition of connector for motor cable

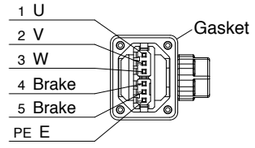

[Opposite direction of motor shaft]

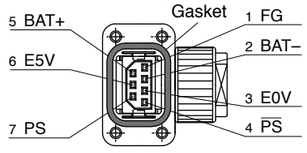

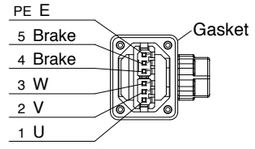

<Remarks>
Secure the gasket in place without removing it from the connector.
Otherwise, the degree of protection of IP67 will not be guaranteed.

* Pins 2 and 5 are left unused (NC) when used in incremental system.

* 4-pin and 5-pin are not used in case of no brake.

Part No.	DV0PM24582	80 mm sq. or less Applicable model	MQMF 100 W to 400 W, MHMF 200 W to 1000 W (Connector type IP67)

• **Components**

Title	Part No.	Number	Manufacturer	Note
Connector (Driver side)	3E206-0100 KV	1	Sumitomo 3M (or equivalent)	For Connector X6 (6-pins)
Shell kit	3E306-3200-008	1		
Encoder connector	JN6FR07SM1	1	Japan Aviation Electronics Ind.	For Encoder cable (7-pins)
Socket contact	LY10-C1-A1-10000	7		
Motor connector	JN11FL06SN1	1	Japan Aviation Electronics Ind.	For Motor cable (6-pins)
Socket contact	JN11S35H3A1	6		

• Pin disposition of connector connector X6

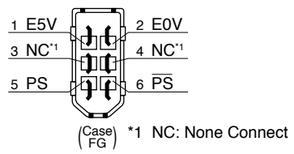

• Pin disposition of connector for encoder cable

[Direction of motor shaft]

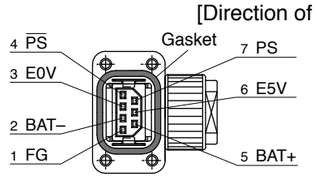

• Pin disposition of connector for motor cable

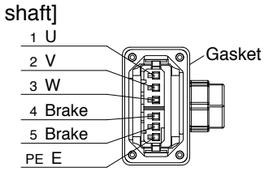

[Opposite direction of motor shaft]

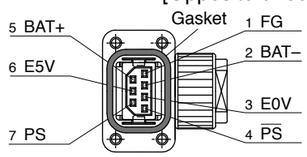

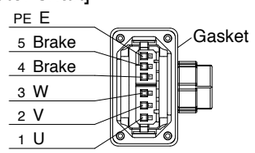

<Remarks>
Secure the gasket in place without removing it from the connector.
Otherwise, the degree of protection of IP67 will not be guaranteed.

* Pins 2 and 5 are left unused (NC) when used in incremental system.

* 4-pin and 5-pin are not used in case of no brake.

Connector Kit for Motor/Encoder Connection

* When IP65 or IP67 are necessary, the customer must give appropriate processing.

Part No.	DV0PM24583	100 mm sq. or more Applicable model	(IP67 motor) Encoder JN2 <Small size connector> MSMF 1.0 kW * to 2.0 kW, MDMF 1.0 kW to 2.0 kW MHMF 1.0 kW *, 1.5 kW, MGMF 0.85 kW to 1.8 kW	Without brake

* MSMF102L1□□, MHMF102L1□□

• **Components**

Title	Part No.	Number	Manufacturer	Note
Connector (Driver side)	3E206-0100 KV	1	Sumitomo 3M (or equivalent)	For Connector X6 (6-pins)
Shell kit	3E306-3200-008	1		
Encoder connector	JN2DS10SL1-R	1	Japan Aviation Electronics Ind.	For Encoder cable (One-touch lock type)
Connector pin	JN1-22-22S-PKG100	5		
Motor connector	JL10-6A20-4SE-EB	1	Japan Aviation Electronics Ind.	For Motor cable (One-touch lock type)
Cable clamp	JL04-2022-CK(14)-R	1		

Part No.	DV0PM24585	100 mm sq. or more Applicable model	(IP67 motor) Encoder JN2 <Small size connector> MSMF 1.0 kW * to 2.0 kW, MDMF 1.0 kW to 2.0 kW MHMF 1.0 kW *, 1.5 kW, MGMF 0.85 kW to 1.8 kW	With brake

* MSMF102L1□□, MHMF102L1□□

• **Components**

Title	Part No.	Number	Manufacturer	Note
Connector (Driver side)	3E206-0100 KV	1	Sumitomo 3M (or equivalent)	For Connector X6 (6-pins)
Shell kit	3E306-3200-008	1		
Encoder connector	JN2DS10SL1-R	1	Japan Aviation Electronics Ind.	For Encoder cable (One-touch lock type)
Connector pin	JN1-22-22S-PKG100	5		
Motor connector	JL10-6A20-18SE-EB	1	Japan Aviation Electronics Ind.	For Motor cable (One-touch lock type)
Cable clamp	JL04-2022-CK(14)-R	1		

Part No.	DV0PM24587	100 mm sq. or more Applicable model	(IP67 motor) Encoder JL10 <Large size connector> MSMF 1.0 kW * to 2.0 kW, MDMF 1.0 kW to 2.0 kW MHMF 1.0 kW *, 1.5 kW, MGMF 0.85 kW to 1.8 kW	Without brake

* MSMF102L1□□, MHMF102L1□□

• **Components**

Title	Part No.	Number	Manufacturer	Note
Connector (Driver side)	3E206-0100 KV	1	Sumitomo 3M (or equivalent)	For Connector X6 (6-pins)
Shell kit	3E306-3200-008	1		
Encoder connector	JL10-6A20-29S	1	Japan Aviation Electronics Ind.	For Encoder cable (One-touch lock type)
Cable clamp	JL04-2022-CK(14)-R	1		
Motor connector	JL10-6A20-4SE-EB	1	Japan Aviation Electronics Ind.	For Motor cable (One-touch lock type)
Cable clamp	JL04-2022-CK(14)-R	1		

Part No.	DV0PM24589	100 mm sq. or more Applicable model	(IP67 motor) Encoder JL10 <Large size connector> MSMF 1.0 kW * to 2.0 kW, MDMF 1.0 kW to 2.0 kW MHMF 1.0 kW *, 1.5 kW, MGMF 0.85 kW to 1.8 kW	With brake

* MSMF102L1□□, MHMF102L1□□

• **Components**

Title	Part No.	Number	Manufacturer	Note
Connector (Driver side)	3E206-0100 KV	1	Sumitomo 3M (or equivalent)	For Connector X6 (6-pins)
Shell kit	3E306-3200-008	1		
Encoder connector	JL10-6A20-29S	1	Japan Aviation Electronics Ind.	For Encoder cable (One-touch lock type)
Cable clamp	JL04-2022-CK(14)-R	1		
Motor connector	JL10-6A20-18SE-EB	1	Japan Aviation Electronics Ind.	For Motor cable (One-touch lock type)
Cable clamp	JL04-2022-CK(14)-R	1		

<Remarks>

• For crimp tool etc., necessary to produce a cable, access the web site of the manufacturer or consult with the manufacturer for details. For inquiries of manufacturer, refer to P.200 "List of Peripheral Equipments".

Part No.	DV0PM24584	100 mm sq. or more Applicable model	(IP67 motor) Encoder JN2 <Small size connector> MSMF 3.0 kW to 5.0 kW, MDMF 3.0 kW to 5.0 kW MHMF 2.0 kW to 5.0 kW, MGMF 2.9 kW, 4.4 kW	Without brake

• **Components**

Title	Part No.	Number	Manufacturer	Note
Connector (Driver side)	3E206-0100 KV	1	Sumitomo 3M (or equivalent)	For Connector X6 (6-pins)
Shell kit	3E306-3200-008	1		
Encoder connector	JN2DS10SL1-R	1	Japan Aviation Electronics Ind.	For Encoder cable (One-touch lock type)
Connector pin	JN1-22-22S-PKG100	5		
Motor connector	JL10-6A22-22SE-EB	1	Japan Aviation Electronics Ind.	For Motor cable (One-touch lock type)
Cable clamp	JL04-2022-CK(14)-R	1		

Part No.	DV0PM24586	100 mm sq. or more Applicable model	(IP67 motor) Encoder JN2 <Small size connector> MSMF 3.0 kW to 5.0 kW, MDMF 3.0 kW to 5.0 kW MHMF 2.0 kW to 5.0 kW, MGMF 2.9 kW, 4.4 kW	With brake

• **Components**

Title	Part No.	Number	Manufacturer	Note
Connector (Driver side)	3E206-0100 KV	1	Sumitomo 3M (or equivalent)	For Connector X6 (6-pins)
Shell kit	3E306-3200-008	1		
Encoder connector	JN2DS10SL1-R	1	Japan Aviation Electronics Ind.	For Encoder cable (One-touch lock type)
Connector pin	JN1-22-22S-PKG100	5		
Motor connector	JL10-6A24-11SE-EB	1	Japan Aviation Electronics Ind.	For Motor cable (One-touch lock type)
Cable clamp	JL04-2428-CK(17)-R	1		

Part No.	DV0PM24588	100 mm sq. or more Applicable model	(IP67 motor) Encoder JL10 <Large size connector> MSMF 3.0 kW to 5.0 kW, MDMF 3.0 kW to 5.0 kW MHMF 2.0 kW to 5.0 kW, MGMF 2.9 kW, 4.4 kW	Without brake

• **Components**

Title	Part No.	Number	Manufacturer	Note
Connector (Driver side)	3E206-0100 KV	1	Sumitomo 3M (or equivalent)	For Connector X6 (6-pins)
Shell kit	3E306-3200-008	1		
Encoder connector	JL10-6A20-29S	1	Japan Aviation Electronics Ind.	For Encoder cable (One-touch lock type)
Cable clamp	JL04-2022-CK(14)-R	1		
Motor connector	JL10-6A22-22SE-EB	1	Japan Aviation Electronics Ind.	For Motor cable (One-touch lock type)
Cable clamp	JL04-2022-CK(14)-R	1		

Part No.	DV0PM24590	100 mm sq. or more Applicable model	(IP67 motor) Encoder JL10 <Large size connector> MSMF 3.0 kW to 5.0 kW, MDMF 3.0 kW to 5.0 kW MHMF 2.0 kW to 5.0 kW, MGMF 2.9 kW, 4.4 kW	With brake

• **Components**

Title	Part No.	Number	Manufacturer	Note
Connector (Driver side)	3E206-0100 KV	1	Sumitomo 3M (or equivalent)	For Connector X6 (6-pins)
Shell kit	3E306-3200-008	1		
Encoder connector	JL10-6A20-29S	1	Japan Aviation Electronics Ind.	For Encoder cable (One-touch lock type)
Cable clamp	JL04-2022-CK(14)-R	1		
Motor connector	JL10-6A24-11SE-EB	1	Japan Aviation Electronics Ind.	For Motor cable (One-touch lock type)
Cable clamp	JL04-2428-CK(17)-R	1		

<Remarks>

• For crimp tool etc., necessary to produce a cable, access the web site of the manufacturer or consult with the manufacturer for details. For inquiries of manufacturer, refer to P.200 "List of Peripheral Equipments".

Connector Kit for Motor/Encoder Connection

* When IP65 or IP67 are necessary, the customer must give appropriate processing.

Part No.	DV0PM20036	100 mm sq. or more Applicable model	(IP67 motor) Encoder JN2 <Small size connector> MSMF 1.0 kW * to 2.0 kW, MDMF 1.0 kW to 2.0 kW MHMF 1.0 kW *, 1.5 kW, MGMF 0.85 kW to 1.8 kW	Without brake

* MSMF102L1□□, MHMF102L1□□

• **Components**

Title	Part No.	Number	Manufacturer	Note
Connector (Driver side)	3E206-0100 KV	1	Sumitomo 3M (or equivalent)	For Connector X6 (6-pins)
Shell kit	3E306-3200-008	1		
Encoder connector	JN2DS10SL1-R	1	Japan Aviation Electronics Ind.	For Encoder cable (One-touch lock type)
Connector pin	JN1-22-22S-PKG100	5		
Motor connector	JL04V-6A20-4SE-EB-R	1	Japan Aviation Electronics Ind.	For Motor cable (Screwed type)
Cable clamp	JL04-2022CK(14)-R	1		

Part No.	DV0PM20038	100 mm sq. or more Applicable model	(IP67 motor) Encoder JN2 <Small size connector> MSMF 1.0 kW * to 2.0 kW, MDMF 1.0 kW to 2.0 kW MHMF 1.0 kW *, 1.5 kW, MGMF 0.85 kW to 1.8 kW	With brake

* MSMF102L1□□, MHMF102L1□□

• **Components**

Title	Part No.	Number	Manufacturer	Note
Connector (Driver side)	3E206-0100 KV	1	Sumitomo 3M (or equivalent)	For Connector X6 (6-pins)
Shell kit	3E306-3200-008	1		
Encoder connector	JN2DS10SL1-R	1	Japan Aviation Electronics Ind.	For Encoder cable (One-touch lock type)
Connector pin	JN1-22-22S-PKG100	5		
Motor connector	JL04V-6A20-18SE-EB-R	1	Japan Aviation Electronics Ind.	For Motor cable (Screwed type)
Cable clamp	JL04-2022CK(14)-R	1		

Part No.	DV0P4310	100 mm sq. or more Applicable model	(IP67 motor) Encoder JL10 <Large size connector> MSMF 1.0 kW * to 2.0 kW, MDMF 1.0 kW to 2.0 kW MHMF 1.0 kW *, 1.5 kW, MGMF 0.85 kW to 1.8 kW	Without brake

* MSMF102L1□□, MHMF102L1□□

• **Components**

Title	Part No.	Number	Manufacturer	Note
Connector (Driver side)	3E206-0100 KV	1	Sumitomo 3M (or equivalent)	For Connector X6 (6-pins)
Shell kit	3E306-3200-008	1		
Encoder connector	N/MS3106B20-29S	1	Japan Aviation Electronics Ind.	For Encoder cable (Screwed type)
Cable clamp	N/MS3057-12A	1		
Motor connector	N/MS3106B20-4S	1	Japan Aviation Electronics Ind.	For Motor cable (Screwed type)
Cable clamp	N/MS3057-12A	1		

Part No.	DV0P4330	100 mm sq. or more Applicable model	(IP67 motor) Encoder JL10 <Large size connector> MSMF 1.0 kW * to 2.0 kW, MDMF 1.0 kW to 2.0 kW MHMF 1.0 kW *, 1.5 kW, MGMF 0.85 kW to 1.8 kW	With brake

* MSMF102L1□□, MHMF102L1□□

• **Components**

Title	Part No.	Number	Manufacturer	Note
Connector (Driver side)	3E206-0100 KV	1	Sumitomo 3M (or equivalent)	For Connector X6 (6-pins)
Shell kit	3E306-3200-008	1		
Encoder connector	N/MS3106B20-29S	1	Japan Aviation Electronics Ind.	For Encoder cable (Screwed type)
Cable clamp	N/MS3057-12A	1		
Motor connector	N/MS3106B20-18S	1	Japan Aviation Electronics Ind.	For Motor cable (Screwed type)
Cable clamp	N/MS3057-12A	1		

<Remarks>

• For crimp tool etc., necessary to produce a cable, access the web site of the manufacturer or consult with the manufacturer for details. For inquiries of manufacturer, refer to P.200 "List of Peripheral Equipments".

Part No.	DV0PM20037	100 mm sq. or more Applicable model	(IP67 motor) Encoder JN2 <Small size connector> MSMF 3.0 kW to 5.0 kW, MDMF 3.0 kW to 5.0 kW MHMF 2.0 kW to 5.0 kW, MGMF 2.9 kW, 4.4 kW	Without brake

• **Components**

Title	Part No.	Number	Manufacturer	Note
Connector (Driver side)	3E206-0100 KV	1	Sumitomo 3M (or equivalent)	For Connector X6 (6-pins)
Shell kit	3E306-3200-008	1		
Encoder connector	JN2DS10SL1-R	1	Japan Aviation Electronics Ind.	For Encoder cable (One-touch lock type)
Connector pin	JN1-22-22S-PKG100	5		
Motor connector	JL04V-6A22-22SE-EB-R	1	Japan Aviation Electronics Ind.	For Motor cable (Screwed type)
Cable clamp	JL04-2022CK(14)-R	1		

Part No.	DV0PM20039	100 mm sq. or more Applicable model	(IP67 motor) Encoder JN2 <Small size connector> MSMF 3.0 kW to 5.0 kW, MDMF 3.0 kW to 5.0 kW MHMF 2.0 kW to 5.0 kW, MGMF 2.9 kW, 4.4 kW	With brake

• **Components**

Title	Part No.	Number	Manufacturer	Note
Connector (Driver side)	3E206-0100 KV	1	Sumitomo 3M (or equivalent)	For Connector X6 (6-pins)
Shell kit	3E306-3200-008	1		
Encoder connector	JN2DS10SL1-R	1	Japan Aviation Electronics Ind.	For Encoder cable (One-touch lock type)
Connector pin	JN1-22-22S-PKG100	5		
Motor connector	JL04V-6A24-11SE-EB-R	1	Japan Aviation Electronics Ind.	For Motor cable (Screwed type)
Cable clamp	JL04-2428CK(17)-R	1		

Part No.	DV0P4320	100 mm sq. or more Applicable model	(IP67 motor) Encoder JL10 <Large size connector> MSMF 3.0 kW to 5.0 kW, MDMF 3.0 kW to 5.0 kW MHMF 2.0 kW to 5.0 kW, MGMF 2.9 kW, 4.4 kW	Without brake

• **Components**

Title	Part No.	Number	Manufacturer	Note
Connector (Driver side)	3E206-0100 KV	1	Sumitomo 3M (or equivalent)	For Connector X6 (6-pins)
Shell kit	3E306-3200-008	1		
Encoder connector	N/MS3106B20-29S	1	Japan Aviation Electronics Ind.	For Encoder cable (Screwed type)
Cable clamp	N/MS3057-12A	1		
Motor connector	N/MS3106B22-22S	1	Japan Aviation Electronics Ind.	For Motor cable (Screwed type)
Cable clamp	N/MS3057-12A	1		

Part No.	DV0P4340	100 mm sq. or more Applicable model	(IP67 motor) Encoder JL10 <Large size connector> MSMF 3.0 kW to 5.0 kW, MDMF 3.0 kW to 5.0 kW MHMF 2.0 kW to 5.0 kW, MGMF 2.9 kW, 4.4 kW	With brake

• **Components**

Title	Part No.	Number	Manufacturer	Note
Connector (Driver side)	3E206-0100 KV	1	Sumitomo 3M (or equivalent)	For Connector X6 (6-pins)
Shell kit	3E306-3200-008	1		
Encoder connector	N/MS3106B20-29S	1	Japan Aviation Electronics Ind.	For Encoder cable (Screwed type)
Cable clamp	N/MS3057-12A	1		
Motor connector	N/MS3106B24-11S	1	Japan Aviation Electronics Ind.	For Motor cable (Screwed type)
Cable clamp	N/MS3057-16A	1		

<Remarks>

• For crimp tool etc., necessary to produce a cable, access the web site of the manufacturer or consult with the manufacturer for details. For inquiries of manufacturer, refer to P.200 "List of Peripheral Equipments".

Connector Kit for Motor/Brake Connection

* When IP65 or IP67 are necessary, the customer must give appropriate processing.

Connector Kit for Motor/Brake Connection

Part No.	DV0PM20040	80 mm sq. or less Applicable model	MSMF 50 W to 1000 W * (Connector type IP67)

* MSMF092L1□1

• **Components**

Title	Part No.	Number	Manufacturer	Note
Connector	JN4FT02SJM-R	1	Japan Aviation Electronics Ind.	For brake cable
Socket contact	ST-TMH-S-C1B-3500	2		

• Pin disposition of connector for brake cable

[Direction of motor shaft]

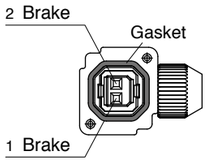

[Opposite direction of motor shaft]

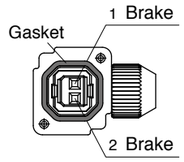

<Remarks>

Secure the gasket in place without removing it from the connector.
Otherwise, the degree of protection of IP67 will not be guaranteed.

Battery for Absolute Encoder

Battery for Absolute Encoder

Part No.	DV0P2990

• Lithium battery: 3.6 V 2000 mAh

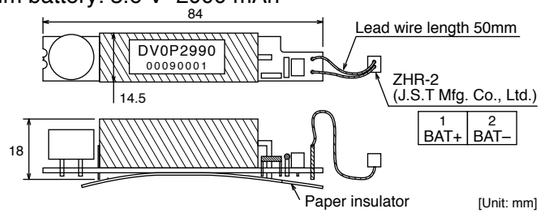

<Caution>

This battery is categorized as hazardous substance, and you may be required to present an application of hazardous substance when you transport by air (both passenger and cargo airlines).

Battery Box for Absolute Encoder *

* Battery is not included. Please buy the absolute encoder battery "DV0P2990" separately.

Part No.	DV0P4430

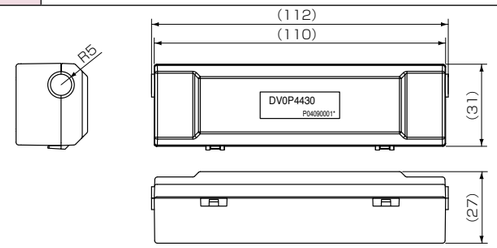

When waking a cable for 23-bit absolute encoder by yourself

When you make your own cable for 23-bit absolute encoder, connect the optional battery for absolute encoder, DV0P2990 as per the wiring diagram below. Connector of the battery for absolute encoder shall be provided by customer as well.

<Caution>

Install and fix the battery securely. If the installation and fixing of the battery is not appropriate, it may cause the wire breakdown or damage of the battery.
Refer to the instruction manual of the battery for handling the battery.

• **Installation Place of Battery**

1) Indoors, where the products are not subjected to rain or direct sun beam.
2) Where the products are not subjected to corrosive atmospheres such as hydrogen sulfide, sulfurous acid, chlorine, ammonia, chloric gas, sulfuric gas, acid, alkaline and salt and so on, and are free from splash of inflammable gas, grinding oil, oil mist, iron powder or chips and etc.
3) Well-ventilated and humid and dust-free place.
4) Vibration-free place

• **Wiring Diagram**

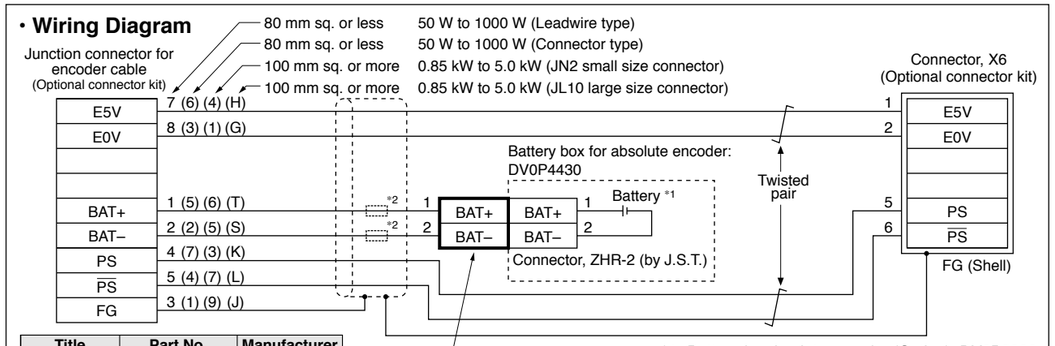

Title	Part No.	Manufacturer
Connector	ZMR-2	J.S.T.
Connector pin	SMM-003T-P0.5	J.S.T.
Clamping Jig	YRS-800	J.S.T.

Connector for absolute encoder connection
(To be provided by yourself)

*1 Battery for absolute encoder (Option): DV0P2990
*2 Since applicable wire diameters of the battery connector and connector at encoder side are different, please connect wires by soldering.

Mounting Bracket

Part No.	DV0PM20100	Frame symbol of applicable driver	A-frame B-frame	Mounting screw	M4 × L6 Pan head 4pcs

Dimension — Top / Bottom side

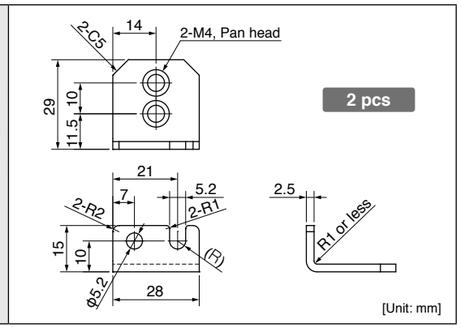

Part No.	DV0PM20101	Frame symbol of applicable driver	C-frame D-frame	Mounting screw	M4 × L6 Pan head 4pcs

Dimension — Top side

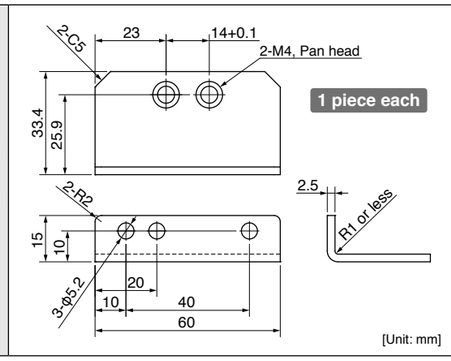

Bottom side

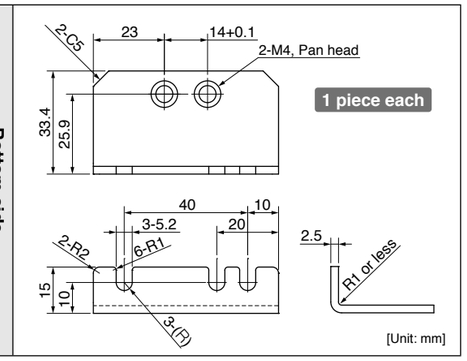

Reactor

Fig.1

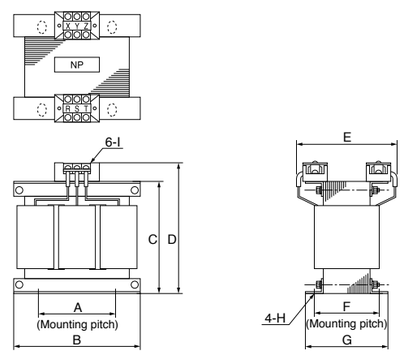

Fig.2

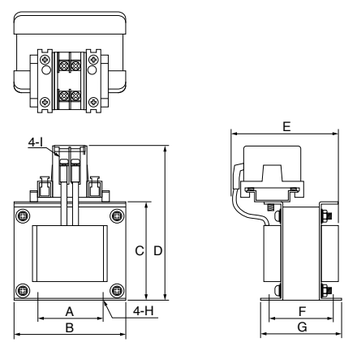

• Wiring of the reactor <3-Phase>

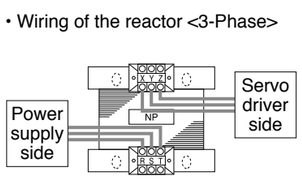

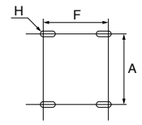

F: Center-to-center distance on outer circular arc

• Wiring of the reactor <Single phase>

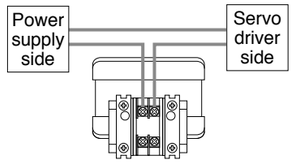

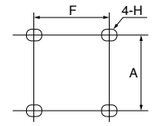

F: Center-to-center distance on slotted hole

[Unit: mm]

	Part No.	A	B	C	D	E (Max)	F	G	H	I	Inductance (mH)	Rated current (A)
Fig.1	**DV0P220**	65±1	125±1	(93)	136 Max	155	70+3/–0	85±2	4-7φ×12	M4	6.81	3
	DV0P221	60±1	150±1	(113)	155 Max	130	60+3/–0	75±2	4-7φ×12	M4	4.02	5
	DV0P222	60±1	150±1	(113)	155 Max	140	70+3/–0	85±2	4-7φ×12	M4	2	8
	DV0P223	60±1	150±1	(113)	155 Max	150	79+3/–0	95±2	4-7φ×12	M4	1.39	11
	DV0P224	60±1	150±1	(113)	160 Max	155	84+3/–0	100±2	4-7φ×12	M5	0.848	16
	DV0P225	60±1	150±1	(113)	160 Max	170	100+3/–0	115±2	4-7φ×12	M5	0.557	25
Fig.2	**DV0P227**	55±0.7	80±1	66.5±1	110 Max	90	41±2	55±2	4-5φ×10	M4	4.02	5
	DV0P228	55±0.7	80±1	66.5±1	110 Max	95	46±2	60±2	4-5φ×10	M4	2	8
	DV0PM20047	55±0.7	80±1	66.5±1	110 Max	105	56±2	70±2	4-5φ×10	M4	1.39	11

* For application, refer to P.23 to P.32 and P.117 to P.120 “Table of Part Numbers and Options”.

Harmonic restraint

Harmonic restraint measures are not common to all countries. Therefore, prepare the measures that meet the requirements of the destination country.
When installing a product for Japan, refer to the instruction manual available on our website.

【Panasonic Corporation, Motor Business Unit web site】
http://industrial.panasonic.com/ww/products/motors-compressors/fa-motors

<Remarks>
When using a reactor, be sure to install one reactor to one servo driver.

External Regenerative Resistor

Part No.	Manufacturer's part No.	Specifications					Activation temperature of built-in thermal protector
		Resistance	cable core outside diameter	Weight	Rated power (reference)*1		
					Free air	with fan 1 m/s*2	
		Ω	mm	kg	W	W	
DV0P4280	RF70M	50	ϕ1.27 (AWG18 stranded wire)	0.1	10	25	140±5 ˚C B-contact Open/Close capacity (resistance load) 1 A 125 VAC 6000 times 0.5 A 250 VAC 10000 times
DV0P4281	RF70M	100		0.1	10	25	
DV0P4282	RF180B	25		0.4	17	50	
DV0P4283	RF180B	50		0.2	17	50	
DV0P4284	RF240	30		0.5	40	100	
DV0P4285	RH450F	20		1.2	52	130	

Manufacturer : Iwaki Musen Kenkyusho

*1 Power with which the driver can be used without activating the built-in thermal protector.
A built-in thermal fuse and a thermal protector are provided for safety.
The circuit should be so designed that the power supply will be turned off as the thermal protector operates.
The built-in thermal fuse blows depending on changes in heat dissipation condition, operating temperature limit, power supply voltage or load.
Mount the regenerative resistor on a machine operating under aggressive regenerating condition (high power supply voltage, large load inertia, shorter deceleration time, etc.) and make sure that the surface temperature will not exceed 100 °C.

*2 If the wind speed is 1m / s by the fan.

Frame	Power supply	
	Single phase, 100 V	Single phase, 200 V 3-phase, 200 V
A	DV0P4280	DV0P4281 (100 W or less) DV0P4283 (200 W)
B	DV0P4283	DV0P4283
C	DV0P4282	
D	—	DV0P4284
E		DV0P4284 × 2 in parallel or DV0P4285
F		DV0P4285 × 2 in parallel
G		DV0P4285 × 3 in parallel
H		DV0P4285 × 6 in parallel

DV0P4280, DV0P4281

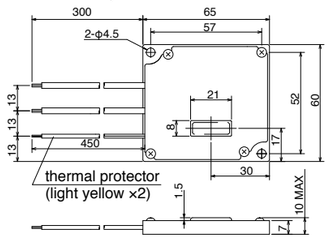

[Unit: mm]

DV0P4282, DV0P4283

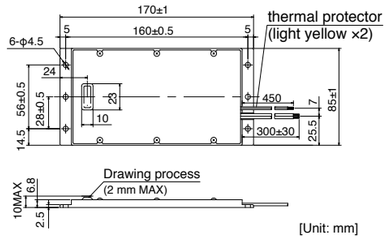

[Unit: mm]

DV0P4284

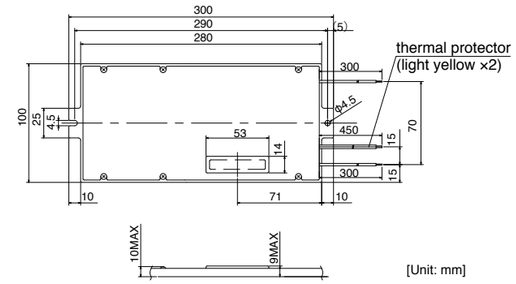

[Unit: mm]

DV0P4285

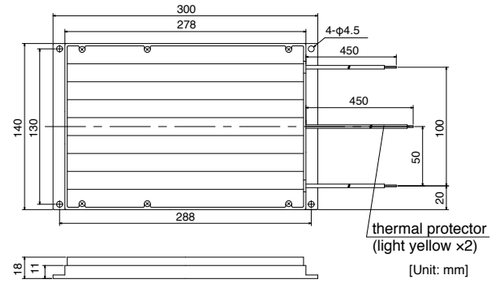

[Unit: mm]

<Caution when using external regenerative resistor>

Regenerative resistor gets very hot.

Configure a circuit so that a power supply shuts down when built-in thermal protector of the regenerative resistor works. Because it is automatic reset thermal protector, please apply a self-holding circuit to the outside in order to maintain safety in case of sudden activation. During the failure of the driver, the surface temperature of the regenerative resistor may exceed the operating temperature before thermal protector starts to work.
Built-in thermal fuse of regenerative resistor is intended to prevent from ignition during the failure of the driver and not intended to suppress the surface temperature of the resistor.

- **Be attached the regenerative resistance to non-combustible material such as metal.**
- **Built-in thermal fuse of regenerative resistor is intended to prevent from ignition during the failure of the driver and not intended to suppress the surface temperature of the resistor.**
- **Do not install the regenerative resistor near flammable materials.**

Surge Absorber for Motor Brake

■ **Recommended components**

Motor		Part No.	Manufacturer
MSMF	50 W to 1000 W	TND15G271K	NIPPON CHEMI-CON CORPORATION
	1.0 kW to 3.0 kW	Z15D151	SEMITEC Corporation
	4.0 kW, 5.0 kW	TNR9G820K	NIPPON CHEMI-CON CORPORATION
MQMF	100W to 400 W	TND15G271K	NIPPON CHEMI-CON CORPORATION
MHMF	50 W to 1000 W		
	1.0 kW, 1.5 kW	TNR9G820K	NIPPON CHEMI-CON CORPORATION
	2.0 kW to 4.0 kW	Z15D151	SEMITEC Corporation
	5.0 kW	NVD07SCD082	KOA Corporation
MDMF	1.0 kW to 3.0 kW	TNR9G820K	NIPPON CHEMI-CON CORPORATION
	4.0 kW	Z15D151	SEMITEC Corporation
	5.0 kW	NVD07SCD082	KOA Corporation
MGMF	0.85 kW to 1.8 kW	TNR9G820K	NIPPON CHEMI-CON CORPORATION
	2.9 kW	Z15D151	SEMITEC Corporation
	4.4 kW	NVD07SCD082	KOA Corporation

List of Peripheral Equipments

Manufacturer	Tel No. / Home Page	Peripheral components
Panasonic Corporation Eco Solutions Company	http://panasonic.net/es/	Circuit breaker
Panasonic Corporation Automotive & Industrial Systems Company	http://panasonic.net/id/	Surge absorber Switch, Relay
Iwaki Musen Kenkyusho Co., Ltd.	+81-44-833-4311 http://www.iwakimusen.co.jp/	Regenerative resistor
KOA Corporation	+81-42-336-5300 http://www.koanet.co.jp/en/index.htm	Surge absorber for holding brake
NIPPON CHEMI-CON CORPORATION	+81-3-5436-7711 http://www.chemi-con.co.jp/e/index.html	
SEMITEC Corporation	+81-3-3621-2703 http://www.semitec.co.jp/english2/	
KK-CORP.CO.JP	+81-184-53-2307 http://www.kk-corp.co.jp/	Ferite core for signal lines
MICROMETALS (Nisshin Electric Co., Ltd.)	+81-4-2934-4151 http://www.nisshin-electric.com/	
TDK Corporation	+81-3-5201-7229 http://www.global.tdk.com/	
Okaya Electric Industries Co. Ltd.	+81-3-4544-7040 http://www.okayaelec.co.jp/english/index.html	Surge absorber Noise filter
Japan Aviation Electronics Industry, Ltd.	+81-3-3780-2717 http://www.jae.co.jp/e-top/index.html	Connector
Japan Molex Inc.	+81-462-65-2313 http://www.molex.co.jp	
J.S.T. Mfg. Co., Ltd.	+81-45-543-1271 http://www.jst-mfg.com/index_e.php	
Sumitomo 3M	+81-3-5716-7290 http:/solutions.3m.com/wps/portal/3M/ja_JP/WW2/Country/	
Tyco Electronics Japan G.K.	+81-44-844-8052 http://www.te.com/ja/home.html	
DYDEN CORPORATION	+81-3-5805-5880 http://www.dyden.co.jp/english/index.htm	Cable
DR. JOHANNES HEIDENHAIN GmbH	+81-3-3234-7781 http://www.heidenhain.de/de_EN/company/contact/	External scale
Fagor Automation S.Coop.	+34-943-719-200 http://www.fagorautomation.com	
Magnescale Co., Ltd.	+81-463-92-7971 http://www.mgscale.com/mgs/language/english/	
Mitutoyo Corporation	+81-44-813-8234 http://www.mitutoyo.co.jp/eng/	
Nidec Sankyo Corporation	+81-3-5740-3006 http://www.nidec-sankyo.co.jp/	
Renishaw plc	+44 1453 524524 www.renishaw.com	
Schaffner EMC, Inc.	+81-3-5712-3650 http://www.schaffner.jp/	Noise filter
TDK-Lambda Corporation	+81-3-5201-7140 http://www.tdk-lambda.com/	

* The above list is for reference only. We may change the manufacturer without notice.

Compact Servo Only for Position Control.

Ultra compact position control type

MINAS E Series

1 Best Fit to Small Drives

- Further evolution in down-sizing, by 47 % in size. (Note)
- Exclusively designed for position control.

(Note) Compared to MUDS043A1

2 Easy to Handle, Easy to Use

- DIN-rail mounting unit (option) improves handling/installation.
- User-friendly Console makes the setup easy.
- High functionality Real-Time Auto-Gain Tuning enables adjustment-free operation.

Console
Option

3 High-Speed Positioning with Resonance Suppression Filters

- Built-In notch filter suppresses resonance of the machine.
- Built-in adaptive filter detect resonance frequency and suppress vibration.

4 Smoother operation for Low Stiffness Machine

- Damping control function suppresses vibration during acceleration/deceleration

Contents

1. Easy to Handle, Easy to Use

High-functionality Real-Time Auto-Gain Tuning (Note 1)

- Offers real automatic gain tuning for low and high stiffness machines with a combination of an adaptive filter.
- Supports the vertical axis application where the load torque is different in rotational direction.

DIN-rail mounting unit (option)

- DIN-rail mounting unit allows parallel mounting with small control devices such as PLC.
- Easy to mount and easy to dismount.

2. Further Reduction of Vibration

Adaptive filter (Note1)

- Makes the notch filter frequency automatically follow the machine resonance frequency in real-time auto-gain tuning.
- Suppression of “Judder” noise of the machine, which is caused by variation of the machines or resonance frequency due to aging, can be expected.

Notch filter (Note1)

- 1-channel notch filter is equipped in the driver independent from adaptive filter.
- Each of 2 filters can set up frequency and notch width, and frequency in 1Hz unit. Suppression of "Judder" noise of the machine which has multiple resonance points can be expected.

Effect of notch filter

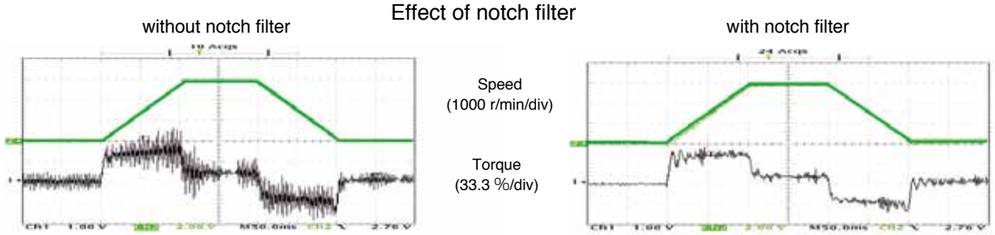

Damping control (Note1)

- You can suppress vibration occurring at both starting and stopping in low stiffness machine, by manually setting up vibration frequency in 0.1 Hz unit. Note) Only applies to manual adjustment

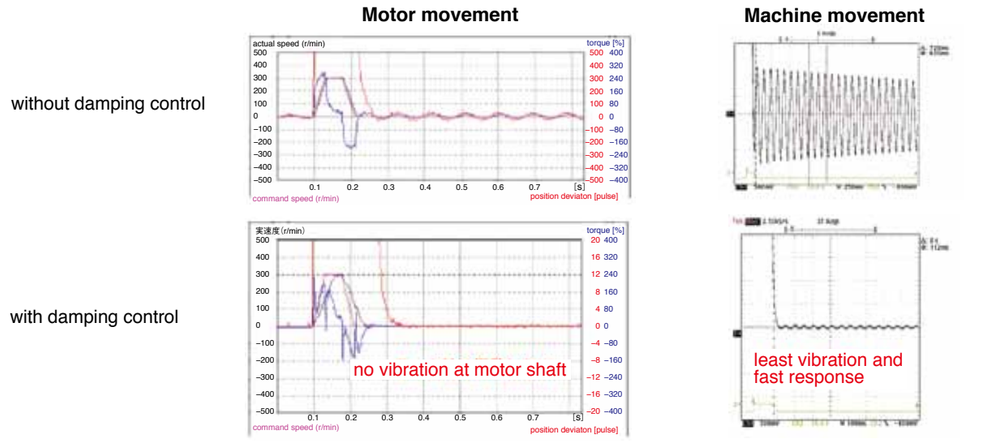

(Note1) Select at positioning action mode.
- At high speed positioning mode (Pr02=0) Select either one of notch filter, damping control or high-functionality real-time auto- gain tuning. Not possible to use them all at the same time. Adaptive filter cannot be used.
- At high-functionality positioning mode (Pr02=1) All of notch filter, damping control, high-functionality real-time auto-gain tuning and adaptive filter can be used at the same time.

3. Further Flexibility and Multiplicity

Console (Option)

- You can set up parameters, copy and make a JOG run.
- Convenient for maintenance at site.
- Refer to P.227, Options.

Command control modes

- Offers 2 command modes, “Position control” and “Internal velocity control”.
- You can make a 4-speed running at preset values with parameter at internal velocity control mode.

Inrush current suppressing function

- Inrush suppressing resistor, which prevent the circuit breaker shutdown of the power supply caused by inrush current at power-on, is equipped in this driver.
- Prevents unintentional shutdown of the power supply circuit breaker in multi axis application and does not give load to the power line.

Regeneration discharging function

- Discharges the regenerative energy with external resistor, where energy is generated while stopping the load with large moment of inertia, or use in up-down operation, and is returned to the driver from the motor.
- No regenerative resistor is installed in the driver.
- It is highly recommended to install an external regenerative resistor (option).

Built-in dynamic brake

- You can select the dynamic brake action which short the servo motor windings of U, V and W, at Servo-OFF, CW/CCW over- travel inhibition, power shutdown and trip.
- You can select the action sequence depending on the machine requirement.

Setup support software (Option)

- With the setup support software, “PANATERM” via RS232 / RS485 communication port, you can monitor the running status of the driver and set up parameters.

  Note) Refer to P.222 for setup support software.

Key-way shaft and tapped shaft end

- Easy pulley attachment and easy maintenance
- Attache screw to the tapped shaft to prevent key or pulley from being pulled out.

Wave-form graphic function

- With the setup support software, “PANATERM”, you can monitor the “Command speed”, “Actual speed”, “Torque”, “Position deviation” and “Positioning complete signal”.
- Helps you to analyze the machine and shorten the setup time.

  Note) Refer to P.222 for setup support software.

Frequency analyzing function

- You can confirm the response frequency characteristics of total machine mechanism including the servo motor with the setup support software, “PANATERM”.
- Helps you to analyze the machine and shorten the setup time.

  Note) Refer to P.222 for setup support software.

Torque limit switching function

- You can select 2 preset torque limit value from external input.
- Use this function for tension control or press-hold control.

Conformity to CE and UL Standards

Subject	Standard conformed		
Motor	IEC60034-1	IEC60034-5 UL1004 CSA22.2 No.100	Conforms to Low-Voltage Directives
Motor and driver	EN50178	UL508C CSA22.2 No.14	
	EN55011	Radio Disturbance Characteristics of Industrial, Scientific and Medical (ISM) Radio-Frequency Equipment	Conforms to references by EMC Directives
	EN61000-6-2	Immunity for Industrial Environments	
	EC61000-4-2	Electrostatic Discharge Immunity Test	
	IEC61000-4-3	Radio Frequency Electromagnetic Field Immunity Test	
	IEC61000-4-4	Electric High-Speed Transition Phenomenon/Burst Immunity Test	
	IEC61000-4-5	Lightening Surge Immunity Test	
	IEC61000-4-6	High Frequency Conduction Immunity Test	
	IEC61000-4-11	Instantaneous Outage Immunity Test	

IEC : International Electrotechnical Commission
EN : Europaischen Normen
EMC : Electromagnetic Compatibility
UL : Underwriters Laboratories
CSA : Canadian Standards Association

Pursuant to at the directive 2004/108/EC,article 9(2)

Panasonic Testing Centre
Panasonic Service Europe,
a division of Panasonic Marketing Europe GmbH
Winsbergring 15,22525 Hamburg,F.R.Germany

* When exporting this product, follow statutory provisions of the destination country.

Motor Line-up

	Motor series	Rated output (kW)	Rated rotational speed (Max. speed) (r/min)	Rotary encoder: 2500 P/r incremental	Rotary encoder: 17bit absolute/ incremental	Brake: Holding	Gear: High precision	UL/ CSA	Enclosure	Features	Applications
Ultra low inertia	MUMA 	0.05 to 0.4 0.05 0.1 0.2 0.4	3000 (5000)	○	–	○	○	○	IP65 Except shaft throughhole and connector	Small capacity Ultra low inertia	SMT machines Inserters High repetitive positioning application

Model Designation

Servo Motor

M U M A 5 A Z P 1 S * *

Special specifications

Symbol	Type
MUMA	Ultra low inertia (50 W to 400 W)

Motor rated output

Symbol	Rated output
5A	50 W
01	100 W
02	200 W
04	400 W

Voltage specifications

Symbol	Specifications
1	100 V
2	200 V
Z	100 V/200 V common (50 W only)

Rotary encoder specifications

Symbol	Format	Pulse counts	Resolution	Wires
P	Incremental	2500 P/r	10000	5

Design order

Symbol	Specifications
1	Standard

Motor structure

Symbol	Shaft	Holding brake		Oil seal	
	Key-way, center tap	without	with	without	with*
S	●	●		●	
T	●		●	●	

* Motor with oil seal is manufactured by order.

See P.213 for motor specifications

Motor with gear reducer

M U M A 0 1 1 P 3 1 N

Symbol	Type
MUMA	Ultra low inertia (100 W to 400 W)

Motor rated output

Symbol	Rated output
01	100 W
02	200 W
04	400 W

Voltage specifications

Symbol	Specifications
1	100 V
2	200 V

Rotary encoder specifications

Symbol	Format	Pulse counts	Resolution	Wires
P	Incremental	2500 P/r	10000	5

Gear reduction ration, gear type

Symbol	Gear reduction ratio	Motor output (W)			Gear type
		100	200	400	
1N	1/5	●	●	●	For high accuracy
2N	1/9	●	●	●	
4N	1/25	●	●	●	

Motor structure

Symbol	Shaft	Holding brake	
	Key-way	without	with
3	●	●	
4	●		●

See P.218 for motor with gear reducer specifications

Servo Driver

M K D E T 1 3 1 0 P * *

Special specifications

Control mode

Symbol	Specifications
P	Pulse train

Current detector current rating

Symbol	Current rating
05	5 A
10	10 A

Frame symbol

Symbol	Frame
MKDE	E series, K-frame
MLDE	E series, L-frame

Power device Max. current rating

Symbol	Current rating
T1	10 A
T2	15 A

Supply voltage specifications

Symbol	Specifications
1	Single phase, 100 V
2	Single phase, 200 V
3	3-phase, 200 V
5	Single/3-phase, 200 V

See P.209 for driver specifications

Overall Wiring/ Driver and List of Applicable Peripheral Equipments

• Wiring of main circuit

Circuit Breaker (MCCB)
Protects the power lines.
Shuts off the circuit when overcurrent passes.

Noise Filter (NF)
Prevents external noise from the power lines. And reduces an effect of the noise generated by the servo driver.

Magnetic Contactor (MC)
Turns on/off the main power of the servo driver.
Surge absorber to be used together with this.

Reactor (L)
Reduces harmonic current of the main power.

Pin-5 and Pin-3 of CN POWER
• Connect an external regenerative resistor (option) between P(pin-5) and B(pin-3) of connector, CN X1, when regenerative energy is large. (Refer to P.228 for regenerative resistor.)

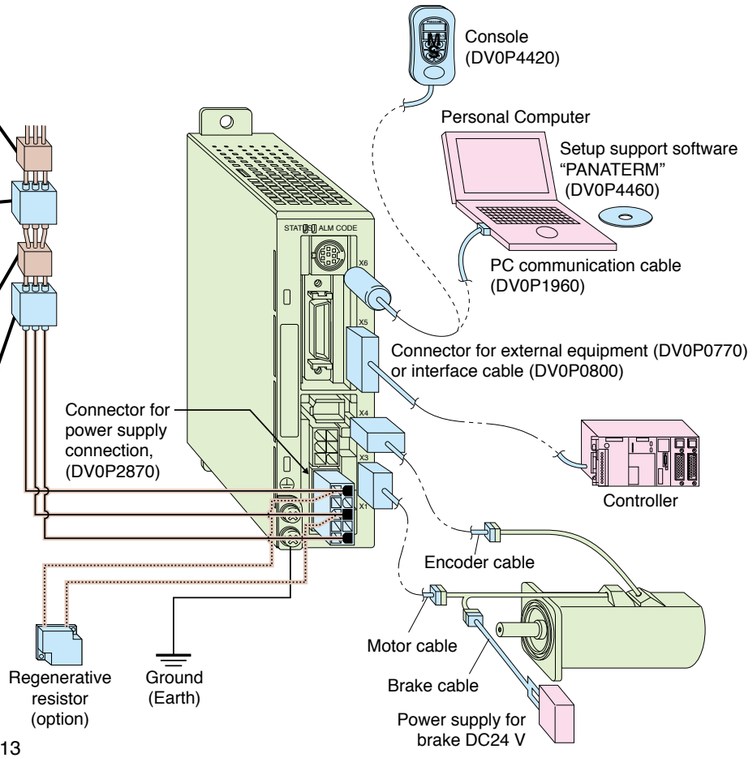

Motor	to P.213
Driver	to P.209
Option	to P.222
Recommended equipments	
Parts customer to prepare	

List of recommended peripheral equipments

Power supply	Motor Series	Motor Output	Power capacity (at rated output)	Circuit Breaker (Rated current)	Noise Filter	Magnetic Contactor Contact Composition	Wire diameter (L1, L2, L3, U, V and W)
Single phase, 100 V	MUMA	50 W	0.3 kVA	(5 A)	DV0P4160	10 A (3P+1a)	0.75 mm² to 0.85 mm² AWG18
		100 W	0.4 kVA				
		200 W	0.5 kVA	(10 A)			
Single phase, 200 V		50 W	0.3 kVA	(5 A)		15 A (3P+1a)	
		100 W					
		200 W	0.5 kVA				
		400 W	0.9 kVA	(10 A)			
3-phase 200 V		50 W	0.3 kVA	(5 A)		10 A (3P+1a)	
		100 W					
		200 W	0.5 kVA				
		400 W	0.9 kVA	(10 A)			

∗ Select the single and 3-phase common specifications corresponding to the power supplies.
● To conform to EC Directives, install a circuit breaker which conforms to IEC and UL Standards (Listed, UL marked) between noise filter and power supply.
● For details of the noise filters, refer to P.240.

<Remarks>
• Use a copper conductor cables with temperature rating of 60 ˚C or higher for main power connector and ground terminal wiring.
Use a cable for ground with diameter of 2.0 mm² (AWG14) or larger.

Carrying page

Options		Part No.	Carrying page
Console		DV0P4420	227
Setup Support Software, PANATERM	Japanese	DV0P4460	222
	English		
RS232 Communication Cable (for Connection with PC)		DV0P1960	227
Interface Cable		DV0P0800	227
Connector Kit for External Equipment		DV0P0770	226
Connector Kit for Motor and Encoder		DV0P3670	225
Connector Kit for Driver Power Supply		DV0P2870	225
Encoder Cable	MFECA0 ∗∗ 0EAM		224
Motor Cable	MFMCA0 ∗∗ 0AEB		224
Brake Cable	MFMCB0 ∗∗ 0GET		224
Cable Set (3 m) (Note 3)	DV0P37300		224
Cable Set (5 m) (Note 3)	DV0P39200		224
DIN Rail Mount Unit	DV0P3811		228
External Regenerative Resistor	100 V	50 Ω 10 W	DV0P2890	228
	200 V	100 Ω 10 W	DV0P2891	
Reactor	100 V	DV0P227	229
		DV0P228	
	200 V	DV0P220	
Noise Filter		DV0P4160	240
Surge Absorber	Single phase 100 V, 200 V	DV0P4190	240
	3-phase 200 V	DV0P1450	
Ferite core for Signal lines		DV0P1460	240

(Note 3) Cable set (3 m) contains,
1) Interface cable: DV0P0800
2) Encoder cable (3 m) : MFECA0030EAM
3) Motor cable (3 m) : MFMCA0030AEB
4) Connector kit for driver power supply connection : DV0P2870
Cable set (5 m) contains,
1) Interface cable: DV0P0800
2) Encoder cable (5 m) : MFECA0050EAM
3) Motor cable (5 m) : MFMCA0050AEB
4) Connector kit for driver power supply connection : DV0P2870

Table of Part Numbers and Options

Power supply	Output (W)	2500P/r, Incremental: Motor (Note) 1	Rating/Spec. (page)	Driver	Dimensions (Frame symbol)	Option: Encoder Cable (Note) 2	Motor Cable (Note) 2		Brake Cable (Note) 2	External Regenerative Resistor	Reactor	Noise Filter
Single phase 100 V	50	MUMA5AZP1 □	213	MKDET1105P	212 (K)	MFECA0∗∗0EAM	MFMCA0∗∗0AEB		MFMCB0∗∗0GET	DV0P2890	DV0P227	DV0P4160
	100	MUMA011P1 □	213	MKDET1110P	212 (K)							
	200	MUMA021P1 □	213	MLDET2110P	212 (L)						DV0P228	
Single phase 200 V	50	MUMA5AZP1 □	215	MKDET1505P	212 (K)					DV0P2891	DV0P220	
	100	MUMA012P1 □	215	MKDET1505P	212 (K)							
	200	MUMA022P1 □	215	MLDET2210P	212 (L)							
	400	MUMA042P1 □	215	MLDET2510P	212 (L)							
3-phase 200 V	50	MUMA5AZP1 □	215	MKDET1505P	212 (K)							
	100	MUMA012P1 □	215	MKDET1505P	212 (K)							
	200	MUMA022P1 □	215	MKDET1310P	212 (K)							
	400	MUMA042P1 □	215	MLDET2510P	212 (L)							
				MLDET2310P								

Note) 1 Motor model number suffix: □
S : Key way with center tap, without brake
T : Kew way with center tap, with brake
Note) 2 ∗∗ represents cable length. For details, refer to P.223.

Basic Specifications	Input power	Single phase, 100 V	Single phase, 100 V to 115 V +10 % –15 % 50 Hz/60 Hz
		Single phase, 200 V	Single phase, 200 V to 240 V +10 % –15 % 50 Hz/60 Hz
		3-phase, 200 V	3-phase, 200 V to 240 V +10 % –15 % 50 Hz/60 Hz
	Environment	Temperature	Operating : 0 ˚C to 55 ˚C, Storage : –20 ˚C to 65 ˚C (Max.temperature guarantee 80 ˚C for 72 hours <Nomal temperature>)
		Humidity	Both operating and storage : 90 %RH or less (free from condensation)
		Altitude	1000 m or lower
		Vibration	5.88 m/s² or less, 10 Hz to 60 Hz (No continuous use at resonance frequency)
	Withstand voltage		Should be 1500 VAC (Sensed current: 20 mA) for 1 minute between Primary and Ground.
	Control method		IGBT PWM Sinusoidal wave drive
	Encoder feedback		2500 P/r (10000 resolution) incremental encoder
	Control signal	Input	7 inputs (1) Servo-ON, (2) Alarm clear and other inputs vary depending on the control mode.
		Output	4 outputs (1) Servo alarm, (2) Alarm, (3) Release signal of external brake and other outputs vary depending on the control mode.
	Pulse signal	Input	2 inputs Supports both line driver I/F and open collector I/F.
		Output	4 outputs Feed out the encoder pulse (A, B and Z-phase) in line driver. Z-phase pulse is also feed out in open collector.
	Communication function	RS232	1 : 1 communication to a host with RS232 interface is enabled.
	Display LED		(1) Status LED (STATUS), (2) Alarm code LED (ALM-CODE)
	Regeneration		No built-in regenerative resistor (external resistor only)
	Dynamic brake		Built-in
	Control mode		3 modes of (1) High-speed position control, (2) Internal velocity control and (3) High-functionality positioning control are selectable with parameter.
Functions	Position control	Control input	(1) CW over-travel inhibition, (2) CCW over-travel inhibition, (3) Deviation counter clear, (4) Gain switching, (5) Electronic gear switching
		Control output	(1) Positioning complete (In-position)
		Pulse input: Max. command pulse frequency	Line driver : 500 kpps, Open collector : 200 kpps
		Pulse input: Type of input pulse train	Differential input. Selectable with parameter, ((1) CW/CCW, (2) A and B-phase, (3) Command and Direction)
		Pulse input: Electronic gear (Division/Multiplication of command pulse)	Setup of electronic gear ratio Setup range of (1-10000) × $2^{(0-17)}$/(1-10000)
		Pulse input: Smoothing filter	Primary delay filter or FIR type filter is selectable to the command input.
	Internal speed control	Control input	(1) CW over-travel inhibition, (2) CCW over-travel inhibition, (3) Selection 1 of internal command speed, (4) Selection 2 of internal command speed, (5) Speed zero clamp
		Control output	(1) Speed arrival (at-speed)
		Internal speed command	Internal 4-speed is selectable with control input.
		Soft-start/down function	Individual setup of acceleration and deceleration are enabled, with 0 s to 10 s/1000 r/min. Sigmoid acceleration/deceleration is also enabled.
		Zero-speed clamp	0-clamp of internal speed command with speed zero clamp input is enabled.
	Common	Auto-gain tuning: Real-time	Estimates the load inertia in real-time in actual operation and sets up the gain automatically corresponding to the machine stiffness. Useable at (1) High-response position control, (2) Internal speed control and (3) High-functionality position control.
		Auto-gain tuning: Normal mode	Estimates the load inertia with an action command inside of the driver, and sets up the gain automatically corresponding to setup of the machine stiffness. Useable at (1) High-response position control, (2) Internal speed control and (3) High-functionality position control.
		Masking of unnecessary input	Masking of the following input signal is enabled. (1) Over-travel inhibition, (2) Speed zero clamp, (3) Torque limit switching
		Division of encoder feedback pulse	1 P/r to 2500 P/r (encoder pulses count is the max.).
		Protective function: Hardware error	Over-voltage, under-voltage, over-speed over-load, over-heat, over-current and encoder error etc.
		Protective function: Software error	Excess position deviation, command pulse division error, EEPROM error etc.
		Traceability of alarm data	Traceable up to past 14 alarms including the present one.
		Damping control function	Manual setup with parameter
		Setup: Manual	Console
		Setup: Setup support software	PANATERM (Supporting OS : Windows98, Windows ME, Windows2000, and WindowsXP)

Standard Wiring Example of Main Circuit/ Encorder Wiring Diagram

Standard Wiring Example of Main Circuit

3-Phase, 200 V

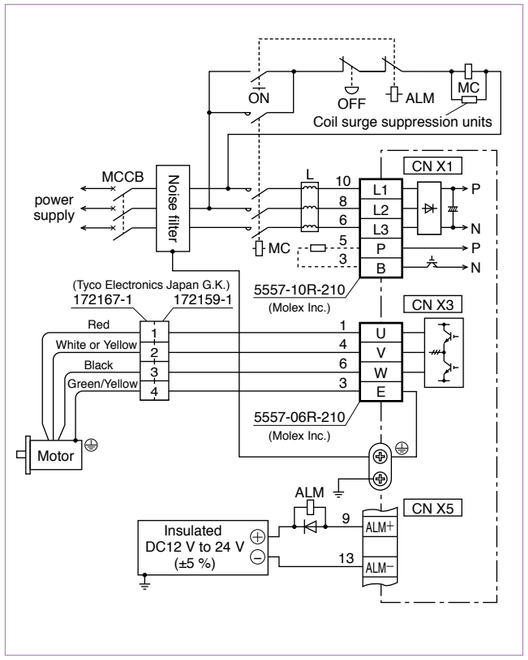

Single Phase, 100 V / 200 V

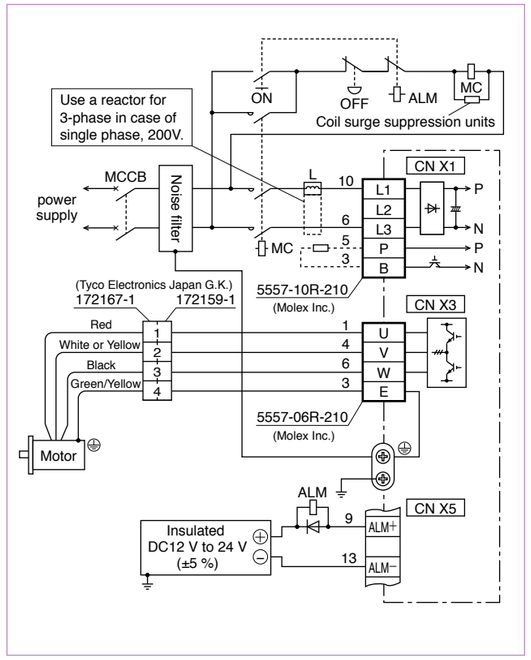

Encorder Wiring Diagram

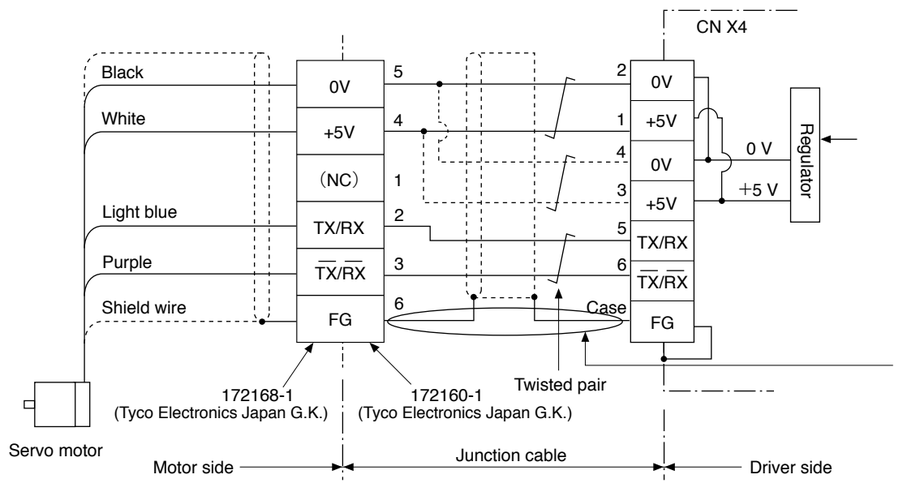

When you make your own junction cable for encoder (Refer to P.225, P.226 "Options" for connector.)

1) Refer the wiring diagram.
2) Use the twisted pair wire with shield, with core diameter of 0.18 mm² (AWG24) or larger, with higher bending resistance.
3) Use the twisted pair wire for the corresponding signal and power supply.
4) Shielding
   Connect the shield of the driver to the case of CN X4.
   Connect the shield of the motor to Pin-6.

Control Circuit Standard Wiring Example

CN X 5 Wiring Example at Position Control Mode

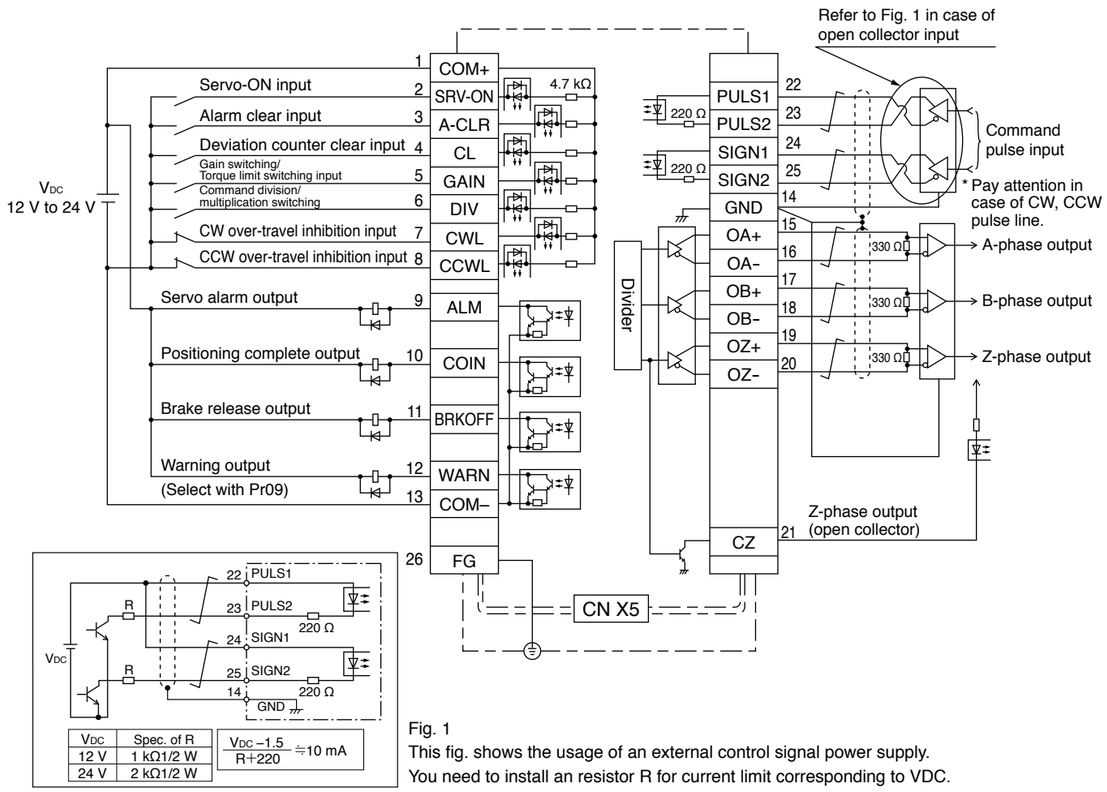

Fig. 1
This fig. shows the usage of an external control signal power supply.
You need to install an resistor R for current limit corresponding to VDC.

CN X 5 Wiring Example at Internal Velocity Control Mode

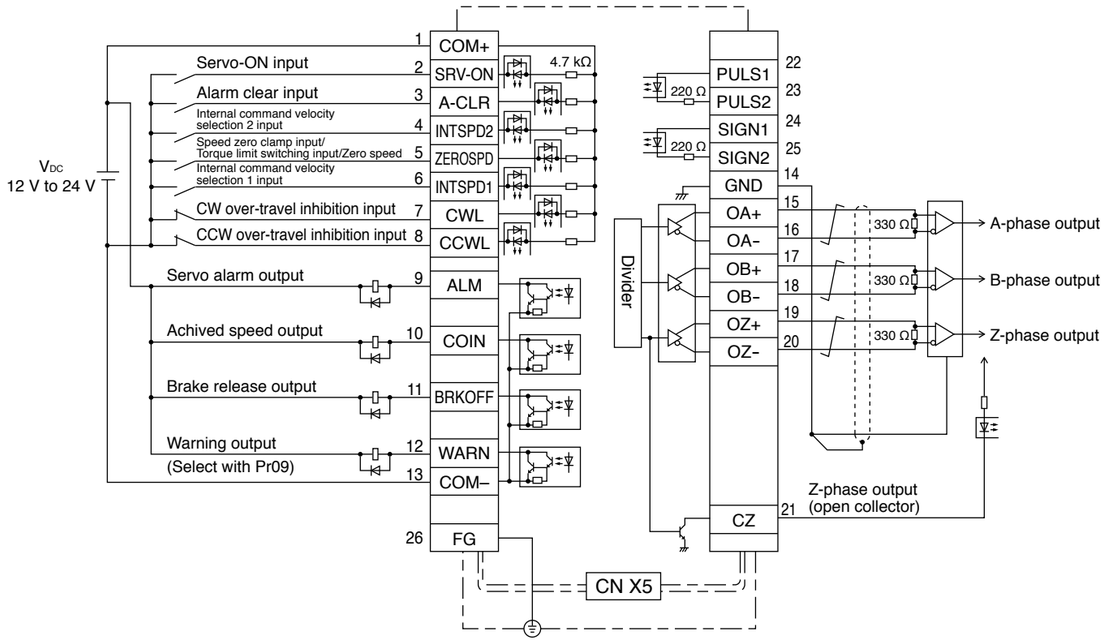

Frame K

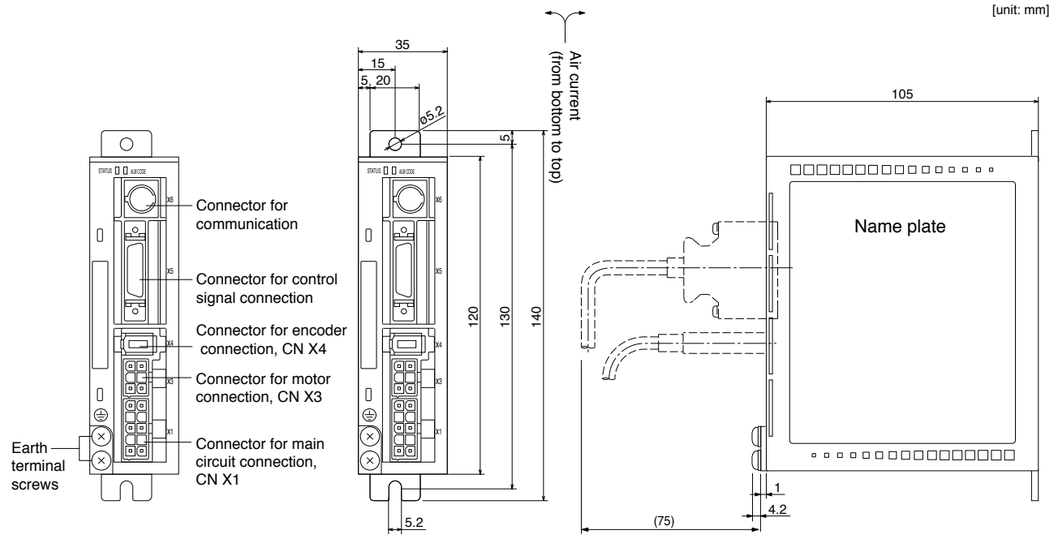

Connector (Driver side)

Connector symbol	Connector type	Manufacturer
CNX1	5569-06A2	Molex Inc.
CNX3	5569-10A2	Molex Inc.
CNX4	53460-0621	Molex Inc.
CNX5	10226-52A11L(or equivalent)	Sumitomo 3M

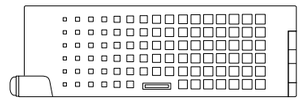

Mass: 0.35 kg

Frame L

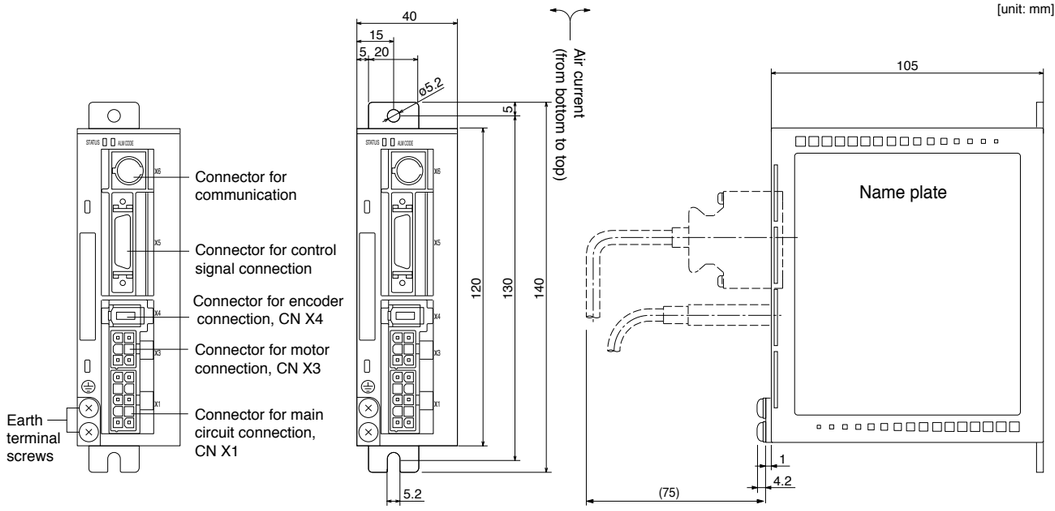

Connector (Driver side)

Connector symbol	Connector type	Manufacturer
CNX1	5569-06A2	Molex Inc.
CNX3	5569-10A2	Molex Inc.
CNX4	53460-0621	Molex Inc.
CNX5	10226-52A11L(or equivalent)	Sumitomo 3M

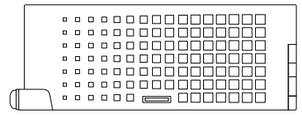

Mass: 0.40 kg

100 V MUMA 50 W to 200 W [Low inertia Small drives]

		AC100 V		
Motor model	MUMA	5AZP1□	011P1□	021P1□
Applicable driver	Model No.	MKDET1105P	MKDET1110P	MLDET2110P
	Frame symbol	Frame K		Frame L
Power supply capacity (kVA)		0.3	0.4	0.5
Rated output (W)		50	100	200
Rated torque (N·m)		0.16	0.32	0.64
Momentary Max. peak torque (N·m)		0.48	0.95	1.91
Rated current (Arms)		1.0	1.6	2.5
Max. current (Ao-p)		4.3	6.9	11.7
Regenerative brake frequency (times/min) Note)1	Without option	No limit Note)2		
	DV0P2890	No limit Note)2		
Rated rotational speed (r/min)		3000		
Max. rotational speed (r/min)		5000		
Moment of inertia of rotor ($\times 10^{-4}$ kg·m²)	Without brake	0.021	0.032	0.10
	With brake	0.026	0.036	0.13
Recommended moment of inertia ratio of the load and the rotor Note)3		30 times or less		
Rotary encoder specifications		2500 P/r Incremental		
	Resolution per single turn	10000		
Protective enclosure rating		IP65 (except rotating portion of output shaft and lead wire end)		
Environment	Ambient temperature	0 ˚C to 40 ˚C (free from freezing), Storage : –20 ˚C to 65 ˚C (Max.temperature guarantee 80 ˚C for 72 hours <nomal humidity>)		
	Ambient humidity	85 %RH or lower (free from condensing)		
	Installation location	Indoors (no direct sunlight), free from corrosive gas, inflammable gas, oil mist and dust		
	Altitude	1000 m or lower		
	Vibration resistance	49 m/s² or less		
Mass (kg), ( ) represents holding brake type		0.4 (0.6)	0.5 (0.7)	0.96 (1.36)

Brake specifications (This brake will be released when it is energized. Do not use this for braking the motor in motion.)		
Static friction torque (N·m)	0.29	1.27
Engaging time (ms)	25	50
Releasing time (ms) Note)4	20 (30)	15 (100)
Exciting current (DC) (A)	0.26	0.36
Releasing voltage	DC 1 V or more	
Exciting voltage	DV 24 V ±10 %	

Permissible load			
During assembly	Radial load P-direction (N)	147	392
	Thrust load A-direction (N)	88	147
	Thrust load B-direction (N)	117	196
During operation	Radial load P-direction (N)	68	245
	Thrust load A-direction (N)	58	98
	Thrust load B-direction (N)	58	98

For motor dimensions, refer to P.217, and for the diver, refer to P.212.

Model Designation

e.g.) M U M A 5 A Z P 1 S

Symbol	Type
MUMA	Ultra low inertia (50 W to 200 W)

Motor rated output

Symbol	Rated output
5A	50 W
01	100 W
02	200 W

Voltage specifications

Symbol	Specifications
1	100 V
Z	100/200 V (50 W only)

Rotary encoder specifications

Symbol	Format	Pulse counts	Resolution	Wires
P	Incremental	2500 P/r	10000	5

Design order
1 : Standard

Motor structure

Symbol	Shaft	Holding brake		Oil seal	
	Key-way, center tap	without	with	without	with
S	●	●		●	
T	●		●	●	

Torque Characteristics [at AC100 V of power voltage (Dotted line represents the torque at 10 % less supply voltage.)]

MUMA5AZP1□

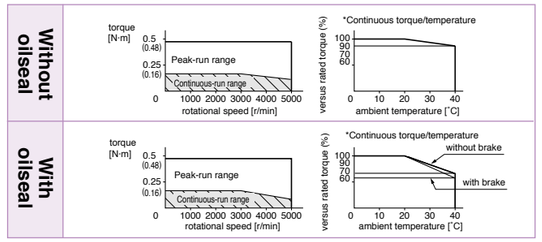

MUMA011P1□

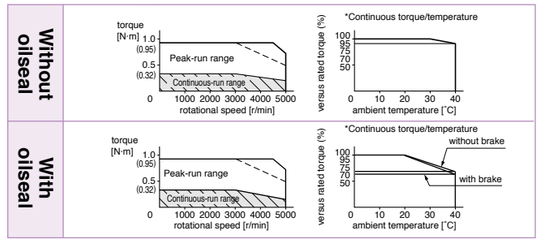

MUMA021P1□

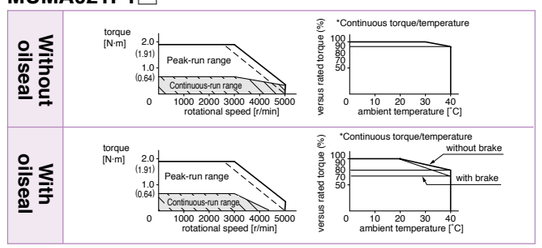

*When you lower the torque limit setup (Pr5E and 5F), running range at high speed might be lowered as well.

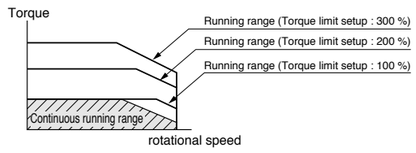

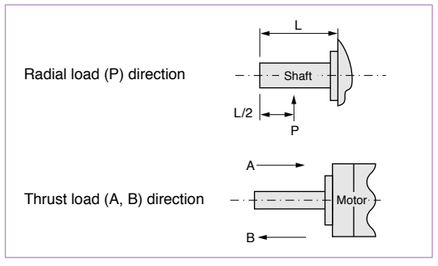

Note) 1. Regenerative brake frequency represents the frequency of the motor's stops from the rated speed with deceleration without load.
- If the load is connected, frequency will be defined as 1/(m+1), where m = (load moment of inertia) / (rotor moment of inertia).
- When the motor speed exceeds the rated speed, regenerative brake frequency is in inverse proportion to the square of (running speed/rated speed).
- Power supply voltage is AC115 V (at 100 V of the main voltage). If the supply voltage fluctuates, frequency is in inverse proportion to the square of (Running supply voltage/115) relative to the value in the table.
- When regeneration occurs continuously such cases as running speed frequently changes or vertical feeding, consult us or a dealer.

2. If the effective torque is within the rated torque, there is no limit in regenerative brake.
3. Consult us or a dealer if the load moment of inertia exceeds the specified value.
4. Specified releasing time is obtained with the use of surge absorber for brake (Z15D151 by SEMITEC Corporation or equivalent). ( ) represents the actually measured value using a diode (200 V, 1 A or equivalent)

200 V MUMA 50 W to 400 W [Low inertia Small drives]

		AC200 V			
Motor model	MUMA	5AZP1□	012P1□	022P1□	042P1□
Applicable driver	Model No.	MKDET1505P		MKDET1310P MKDET2210P	MLDET2310P MLDET2510P
	Frame symbol	Frame K		Frame K Frame L	Frame L
Power supply capacity (kVA)		0.3	0.3	0.5	0.9
Rated output (W)		50	100	200	400
Rated torque (N · m)		0.16	0.32	0.64	1.3
Momentary Max. peak torque (N · m)		0.48	0.95	1.91	3.8
Rated current (Arms)		1.0	1.0	1.6	2.5
Max. current (Ao-p)		4.3	4.3	7.5	11.7
Regenerative brake frequency (times/min) Note)1	Without option	No limit Note)2			
	DV0P2891	No limit Note)2			
Rated rotational speed (r/min)		3000			
Max. rotational speed (r/min)		5000			
Moment of inertia of rotor ($\times 10^{-4}$ kg·m²)	Without brake	0.021	0.032	0.10	0.17
	With brake	0.026	0.036	0.13	0.20
Recommended moment of inertia ratio of the load and the rotor Note)3		30 times or less			
Rotary encoder specifications		2500 P/r Incremental			
	Resolution per single turn	10000			
Protective enclosure rating		IP65 (except rotating portion of output shaft and lead wire end)			
Environment	Ambient temperature	0 ˚C to 40 ˚C (free from freezing), Storage : –20 ˚C to 65 ˚C (Max.temperature guarantee 80 ˚C for 72 hours <nomal humidity>)			
	Ambient humidity	85 %RH or lower (free from condensing)			
	Installation location	Indoors (no direct sunlight), free from corrosive gas, inflammable gas, oil mist and dust			
	Altitude	1000 m or lower			
	Vibration resistance	49 m/s² or less			
Mass (kg), ( ) represents holding brake type		0.4 (0.6)	0.5 (0.7)	0.96 (1.36)	1.5 (1.9)

Brake specifications (This brake will be released when it is energized. Do not use this for braking the motor in motion.)		
Static friction torque (N · m)	0.29	1.27
Engaging time (ms)	25	50
Releasing time (ms) Note)4	20 (30)	15 (100)
Exciting current (DC) (A)	0.26	0.36
Releasing voltage	DC 1 V or more	
Exciting voltage	DV 24 V ±10 %	

Permissible load			
During assembly	Radial load P-direction (N)	147	392
	Thrust load A-direction (N)	88	147
	Thrust load B-direction (N)	117	196
During operation	Radial load P-direction (N)	68	245
	Thrust load A-direction (N)	58	98
	Thrust load B-direction (N)	58	98

For motor dimensions, refer to P.217, and for the driver, refer to P.212.

Note) Driver for 50 W and 100 W has a common power supply of single phase and 3-phase 200 V.
Driver for 200 W, the upper row is the power supply of 3-phase 200 V, and lower is the power supply of single-phase 200 V.
Driver for 400 W, the upper row is the power supply of 3-phase 200 V, and lower is the common power supply of single-phase and 3-phase 200 V.

Model Designation

e.g.) M U M A 5 A Z P 1 S

Symbol	Type
MUMA	Ultra low inertia (50 W to 400 W)

Motor rated output

Symbol	Rated output
5A	50 W
01	100 W
02	200 W
04	400 W

Voltage specifications

Symbol	Specifications
2	200 V
Z	100/200 V (50 W only)

Rotary encoder specifications

Symbol	Format	Pulse counts	Resolution	Wires
P	Incremental	2500 P/r	10000	5

Design order
1 : Standard

Motor structure

Symbol	Shaft	Holding brake		Oil seal	
	Key-way, center tap	without	with	without	with
S	●	●		●	
T	●		●	●	

Torque Characteristics [at AC200 V of power voltage (Dotted line represents the torque at 10 % less supply voltage.)]

MUMA5AZP1□

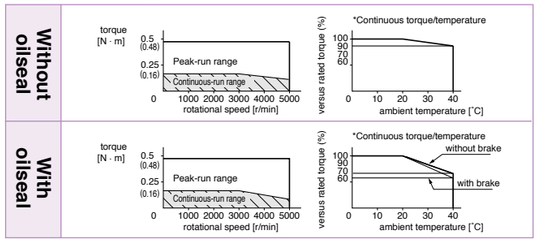

MUMA012P1□

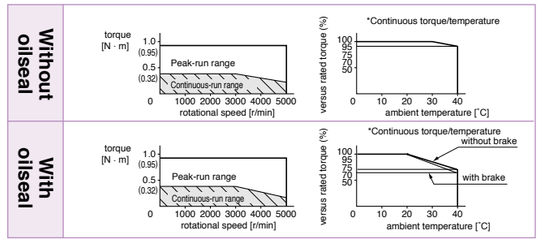

MUMA022P1□

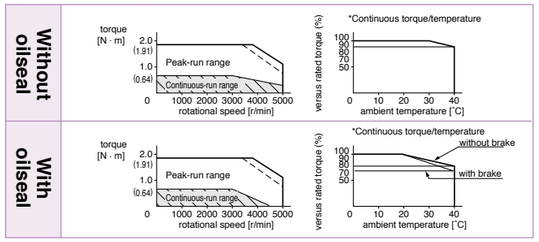

MUMA042P1□

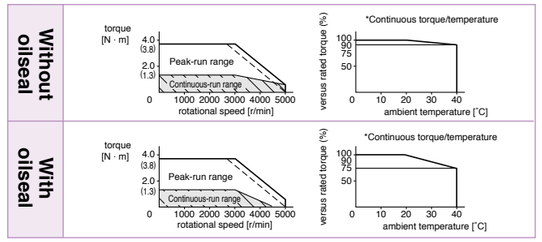

*When you lower the torque limit setup (Pr5E and 5F), running range at high speed might be lowered as well.

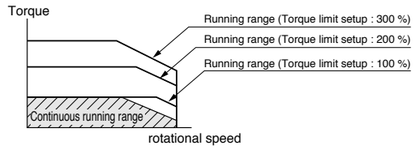

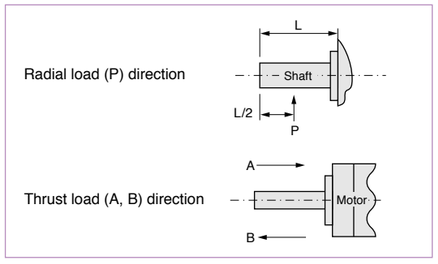

Note) 1. Regenerative brake frequency represents the frequency of the motor's stops from the rated speed with deceleration without load.
- If the load is connected, frequency will be defined as 1/(m+1), where m = (load moment of inertia) / (rotor moment of inertia).
- When the motor speed exceeds the rated speed, regenerative brake frequency is in inverse proportion to the square of (running speed/rated speed).
- Power supply voltage is AC240 V (at 200 V of the main voltage). If the supply voltage fluctuates, frequency is in inverse proportion to the square of (Running supply voltage/240) relative to the value in the table.
- When regeneration occurs continuosly such cases as running speed frequently changes or vertical feeding, consult us or a dealer.

2. If the effective torque is within the rated torque, there is no limit in regenerative brake.
3. Consult us or a dealer if the load moment of inertia exceeds the specified value.
4. Specified releasing time is obtained with the use of surge absorber for brake (Z15D151 by SEMITEC Corporation or equivalent). ( ) represents the actually measured value using a diode (200 V, 1 A or equivalent)

MUMA 50 W to 400 W

[Unit: mm]

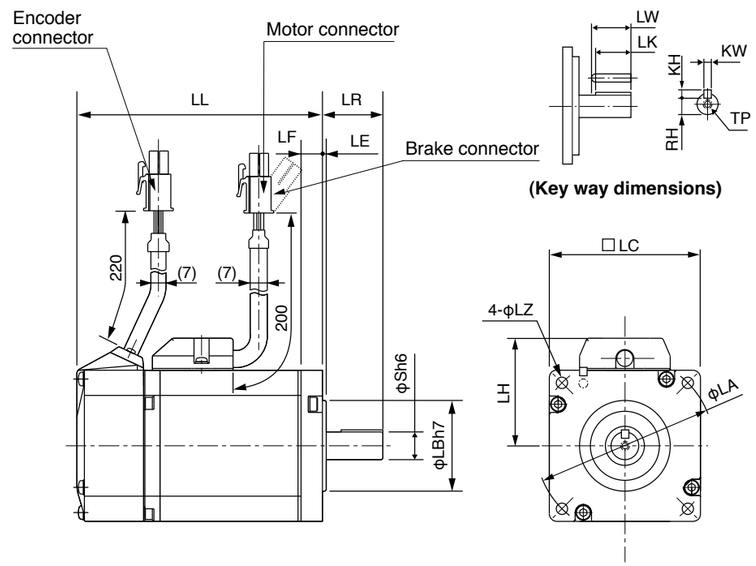

* Dimensions are subject to change without notice. Contact us or a dealer for the latest information

[Unit: mm]

		MUMA series (Ultra low inertia)			
Motor output		50 W	100 W	200 W	400 W
Motor model	MUMA	5A□P1□	01□P1□	02□P1□	04□P1□
Rotary encoder specifications		2500 P/r Incremental	2500 P/r Incremental	2500 P/r Incremental	2500 P/r Incremental
LL	Without brake	75.5	92.5	96	123.5
	With brake	107	124	129	156.5
LR		24	24	30	30
S		8	8	11	14
LA		48	48	70	70
LB		22	22	50	50
LC		42	42	60	60
LE		2	2	3	3
LF		7	7	7	7
LH		34	34	43	43
LZ		3.4	3.4	4.5	4.5
Key way	LW	14	14	20	25
	LK	12.5	12.5	18	22.5
	KW	3h9	3h9	4h9	5h9
	KH	3	3	4	5
	RH	6.2	6.2	8.5	11
	TP	M3 × 6 (depth)	M3 × 6 (depth)	M4 × 8 (depth)	M5 × 10 (depth)
Mass (kg)	Without brake	0.40	0.50	0.96	1.5
	With brake	0.60	0.70	1.36	1.9
Connector/Plug specifications		refer to Options, P.225, P.226.			

<Cautions>
Reduce the moment of inertia ratio if high speed response operation is required.
Read the Instruction Manual carefully and understand all precautions and remarks before using the products.

MINAS E Series Motors with Gear Reducer

Motor Types with Gear Reducer

Reduction ratio	Motor output (W) 100	200	400	Type of reducer
1/ 5	●	●	●	For high precision
1/ 9	●	●	●	
1/25	●	●	●	

Efficiency of the gear reducer shows the following inclination in relation to output torque and rotational speed.

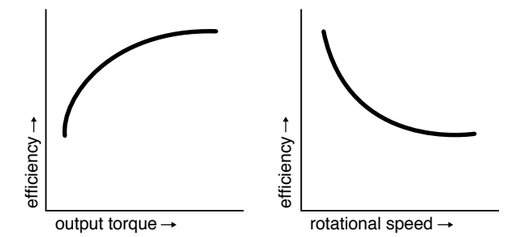

Model No. Designation

e.g.) M U M A 0 1 1 P 3 1 N

Symbol	Type
MUMA	Low inertia (100 to 400 W)

Motor rated output

Symbol	Rated output
01	100 W
02	200 W
04	400 W

Voltage specifications

Symbol	Specifications
1	100 V
2	200 V

Rotary encoder specifications

Symbol	Format	Pulse counts	Pulse counts	Wire
P	Incremental	2500 P/r	10000	5

Motor types with gear reducer

Symbol	Reduction ratio	Motor output 100	200	400	Type of reducer
1N	1/ 5	●	●	●	For High precision
2N	1/ 9	●	●	●	
4N	1/25	●	●	●	

Motor structure

Symbol	Shaft Key-way	Holding brake without	with
3	●	●	
4	●		●

Specifications of Motor with Gear Reducer

Motor type		MUMA
Gear reducer	Backlash	3 minutes or smaller (initial value) at output shaft of the reducer
	Composition of gear	Planetary gear
	Gear efficiency	65 % to 85 %
	Rotational direction at output shaft (of reducer)	Same direction as the motor output shaft
	Composition of gear	Planetary gear
	Mounting method	Flange mounting
	Permissible moment of inertia of the load (conversion to the motor shaft)	10 times or smaller than rotor moment of inertia of the motor
	Protective structure	IP44 (at gear reducer)
Environment	Ambient temperature	0 ˚C to 40 ˚C
	Ambient humidity	85 %RH (free from condensation) or less
	Vibration resistance	49 m/s² or less (at motor frame)
	Impact resistance	98 m/s² or less

Table of Motor Specifications/ The Combination of the Driver and the Motor

Table of Motor with Gear Reducer Specifications

Model	Motor Output (W)	Reduction ratio	MUMA with gear reducer Output (W)	Rated speed (r/min)	Max. speed (r/min)	Rated torque (N·m)	Peak max. torque (N·m)	Moment of inertia (motor + reducer/converted to motor shaft) J (× 10^{-4}kg·m²) w/o brake	w/ brake	Mass (kg) w/o brake	w/ brake	Permissible radial load (N)	Permissible thrust load (N)
MUMA01□P□1N	100	1/5	75	600	1000	1.18	3.72	0.072	0.076	1.05	1.25	490	245
MUMA01□P□2N		1/9	80	333	555	2.25	6.86	0.0663	0.0703	1.05	1.25	588	294
MUMA01□P□4N		1/25	80	120	200	6.27	19.0	0.0645	0.0685	2.20	2.40	1670	833
MUMA02□P□1N	200	1/5	170	600	1000	2.65	8.04	0.218	0.248	1.68	2.08	490	245
MUMA02□P□2N		1/9	132	333	555	3.72	11.3	0.368	0.398	2.66	3.06	1180	588
MUMA02□P□4N		1/25	140	120	200	11.1	33.3	0.388	0.418	2.66	3.06	1670	833
MUMA042P□1N	400	1/5	340	600	1000	5.39	16.2	0.533	0.563	3.2	3.6	980	490
MUMA042P□2N		1/9	332	333	555	9.51	28.5	0.438	0.468	3.2	3.6	1180	588
MUMA042P□4N		1/25	332	120	200	26.4	79.2	0.470	0.500	4.7	5.1	2060	1030

For dimensions, refer to P.221.

The Combination of the Driver and the Motor with Gear Reducer

Combination with driver		100 V		200 V		
Encoder	Motor output	Part No. of motor with gear reducer	Single phase, 100 V Part No. of driver	Part No. of motor with gear reducer	3-phase, 200 V Part No. of driver	Single phase, 200 V Part No. of driver
2500 P/r Incremental	100 W	MUMA011P□□N	MKDET1110P	MUMA012P□□N	MKDET1505P	MKDET1505P
	200 W	MUMA021P□□N	MLDET2110P	MUMA022P□□N	MKDET1310P	MLDET2210P
	400 W	–	–	MUMA042P□□N	MLDET2510P	MLDET2510P
					MLDET2310P	

For dimensions, refer to P.212.

Torque Characteristics

For High Precision (MUMA Series 100 W to 400 W)

Supply voltage to driver	Motor output \ Reduction ratio	1/5	1/9	1/25
100 V	100 W	MUMA011P□1N 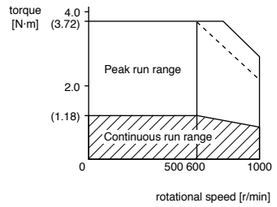	MUMA011P□2N 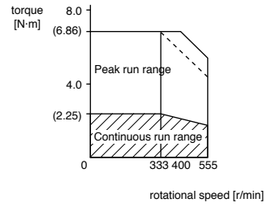	MUMA011P□4N 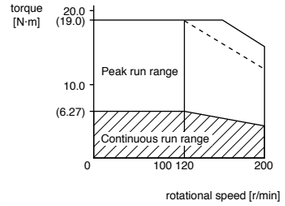
	200 W	MUMA021P□1N 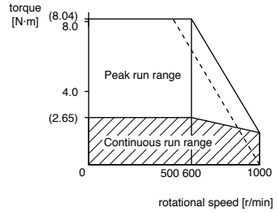	MUMA021P□2N 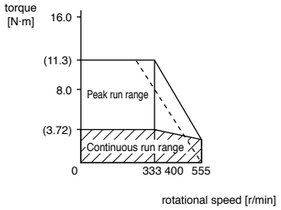	MUMA021P□4N 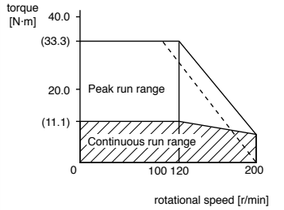
200 V	100 W	MUMA012P□1N 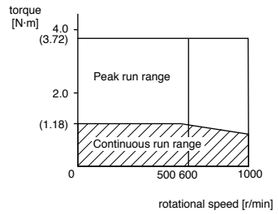	MUMA012P□2N 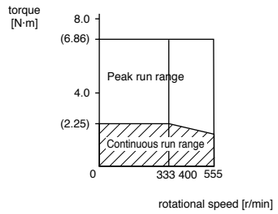	MUMA012P□4N 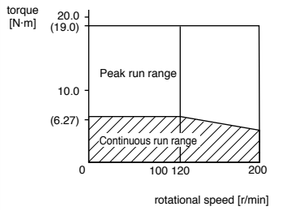
	200 W	MUMA022P□1N 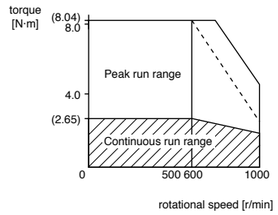	MUMA022P□2N 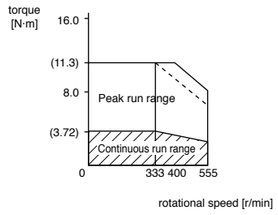	MUMA022P□4N 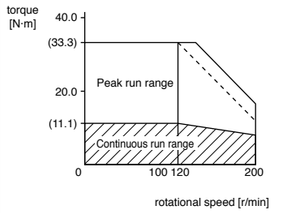
	400 W	MUMA042P□1N 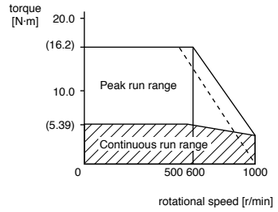	MUMA042P□2N 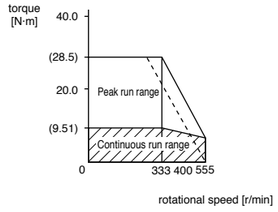	MUMA042P□4N 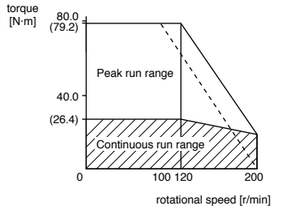

Dotted line represents the torque at 10 % less supply voltage.

Motor Dimensions

MUMA series with Gear Reducer

[Unit: mm]

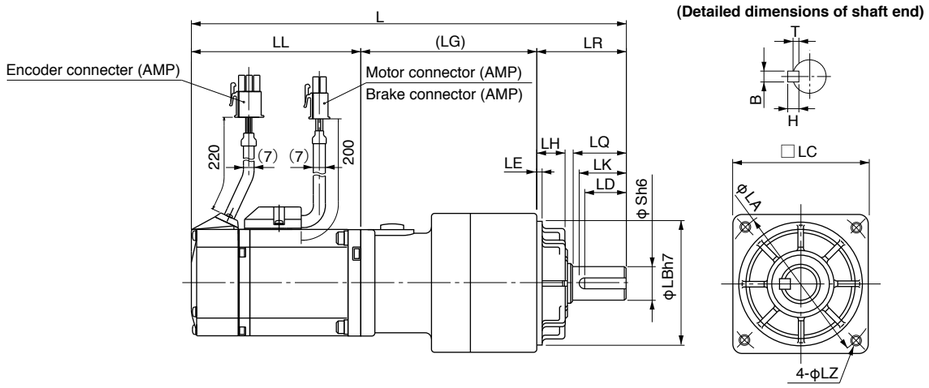

2500 P/r Encoder

[Unit: mm]

Model	Motor output	Reduction ratio	L	LL	LR	LQ	LC	LB	LA	S	LH	LZ	LK	(LG)	LE	Key way B×H×LD	T
MUMA01□P□1N	100 W	1 / 5	192	92.5	32	20	52	50	60	12	10	M5 (Depth: 12)	18	67.5	3	4×4×16	2.5
			223.5	124													
MUMA01□P□2N		1 / 9	192	92.5													
			223.5	124													
MUMA01□P□4N		1/25	234.5	92.5	50	30	78	70	90	19	17	M6 (Depth: 20)	26	92		6×6×22	3.5
			266	124													
MUMA02□P□1N	200 W	1 / 5	200.5	96	32	20	52	50	60	12	10	M5 (Depth: 12)	18	72.5		4×4×16	2.5
			233.5	129													
MUMA02□P□2N		1 / 9	235.5	96	50	30	78	70	90	19	17	M6 (Depth: 20)	26	89.5		6×6×22	3.5
			268.5	129													
MUMA02□P□4N		1/25	246	96										100			
			279	129													
MUMA042P□1N	400 W	1 / 5	263	123.5										89.5			
			296	156.5													
MUMA042P□2N		1 / 9	263	123.5													
			296	156.5													
MUMA042P□4N		1/25	288.5	123.5	61	40	98	90	115	24	18	M8 (Depth: 20)	35	104	5	8×7×30	4
			321.5	156.5													

Upper column : without brake
Lower column : with brake

Setup Support Software

Setup Support Software "PANATERM" for MINAS series AC Servo Motor & Driver

Part No.	DV0P4460 (Japanese/English version)

The PANATERM assists users in setting parameters, monitoring control conditions, setup support, and analyzing mechanical operation data on the PC screen, when installed in a commercially available personal computer, and connected to the MINAS A4 series, E series through the RS232 serial interface.

If your PC does not have RS232 port, use RS232-USB converter.

Basic Function

● Parameter setup
- After a parameter is defined on the screen, it will be sent to the driver immediately.
- Once you register parameters you frequently use, they can be easily set up on the screen.

Monitoring Control Conditions

● Monitor
- Control conditions: Control mode, velocity, torque, error and warning
- Driver input signal
- Load conditions: Total count of command/feedback pulses, Load ratio, Regenerative resistor load ratio

● Alarm
- Displays the numbers and contents of the current alarm and up to 14 error events in the past.
- Clears the numbers and contents of the current alarm and up to 14 error events in the past.

Setup

● Auto tuning
- Gain adjustment and inertia ratio measurement

● Graphic waveform display
- The graphic display shows command velocity, actual velocity, torque, and error waveforms.

● Absolute encoder setup
- Clears absolute encoder at the origin.
- Displays single revolution/multi-revolution data.
- Displays absolute encoder status.

Analysis of Mechanical Operation Data

● Frequency analysis
- Measures frequency characteristics of the machine, and displays Bode diagram.

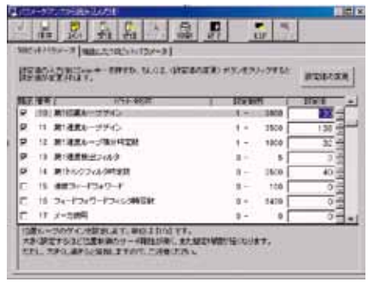

Parameter

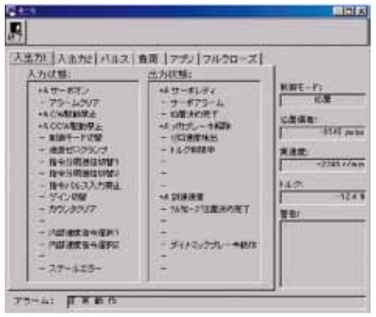

Monitor

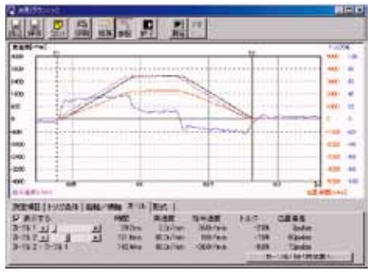

Graphic waveform display

■ Can not use with A5, A6 family.

Hardware configuration
[Personal computer] ・CPU : Pentium 100MHz or more ・Memory : 16 MB or more (32 MB recommended)
・Hard disk capacity (vacancy of 25 MB or more recommended) ・OS : Windows® 98, Windows® Me, Windows® 2000, Windows® XP (US version)
・Communication speed of serial communication port : 2400 bps or more (The software may not operate normally using USB-to-Serial adapter.)
[Display] ・Resolution : 640*480 (VGA) or more (desirably 1024*768) ・Number of colors : 256 colors or more
[CD-ROM drive] ・CD-ROM drive operable on the above-mentioned personal computer

Cable part No. Designation

Encoder Cable

1	2	3	4	5	6	7	8	9	10	11	12
M	F	E	C	A	0	0	5	0	E	A	M

Cable end (Driver side)

M	Connector (MUMA)

Cable end (Encoder side)

A	Tyco Electronics Japan G.K. connector

Cable type

E	PVC cable with shield by Oki Electric Cable Co., 0.20 mm² × 3P

Cable length

0030	3 m
0050	5 m
0100	10 m
0200	20 m

Type classification

MFECA: Encoder cable

Motor Cable, Brake Cable

1	2	3	4	5	6	7	8	9	10	11	12
M	F	M	C	A	0	0	5	0	A	E	B

Cable end at driver side

B	Molex Inc.
T	Clamp terminal

Cable end at motor side

E	Tyco Electronics Japan G.K. connector

Cable type

A	ROBO-TOP® 4-wire (DYDEN CORPORATION)
G	ROBO-TOP® 2-wire (DYDEN CORPORATION)

Cross section of cable core

0	0.75 mm²
1	1.25 mm²
2	2.0 mm²
3	3.5 mm²

Type classification

A	Standard
B	Special
⋮	Design Oder

Cable length

003	3 m
005	5 m
010	10 m
020	20 m

AC servo motor cable

ROBO-TOP® is a trade mark of DYDEN CORPORATION

Cable

Cable Set (3 m)

Part No.	DV0P37300

1) Interface cable : DV0P0800
2) Encoder cable (3 m) : MFECA0030EAM
3) Motor cable (3 m) : MFMCA0030AEB
4) Connector kit for driver power supply connection : DV0P2870

Cable Set (5 m)

Part No.	DV0P39200

1) Interface cable : DV0P0800
2) Encoder cable (5 m) : MFECA0050EAM
3) Motor cable (5 m) : MFMCA0050AEB
4) Connector kit for driver power supply connection : DV0P2870

Encoder Cable

Part No.	MFECA0 ＊＊ 0EAM

[Unit: mm]

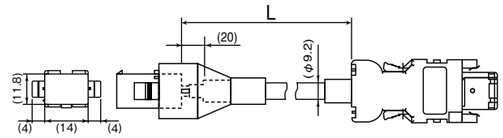

Title	Part No.	Manufacturer
Connector (Driver side)	3E206-0100KV	Sumitomo 3M or equivalent
Shell kit	3E306-3200-008	
Connector	172160-1	Tyco Electronics
Connector Pin	170365-1	
Cable	0.20 mm² × 3P	Oki Electric Cable Co., Ltd.

L (m)	Part No.
3	MFECA0030EAM
5	MFECA0050EAM
10	MFECA0100EAM
20	MFECA0200EAM

Motor Cable (ROBO-TOP® 105 °C 600 V . DP)

ROBO-TOP® is a trade mark of DYDEN CORPORATION

Part No.	MFMCA0 ＊＊ 0AEB

[Unit: mm]

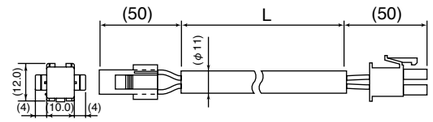

Title	Part No.	Manufacturer
Connector	172159-1	Tyco Electronics
Connector Pin	170362-1, 170366-1	
Connector	5557-06R-210	Molex Inc
Connector Pin	5556T	
Cable	ROBO-TOP 600 V 0.75 mm²	Daiden Co.,Ltd.

L (m)	Part No.
3	MFMCA0030AEB
5	MFMCA0050AEB
10	MFMCA0100AEB
20	MFMCA0200AEB

Brake Cable (ROBO-TOP® 105 °C 600V . DP)

ROBO-TOP® is a trade mark of DYDEN CORPORATION

Part No.	MFMCB0 ＊＊ 0GET

[Unit: mm]

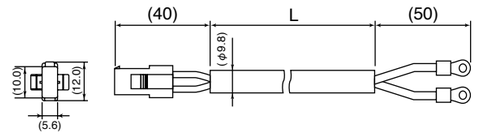

Title	Part No.	Manufacturer
Connector	172157-1	Tyco Electronics
Connector Pin	170362-1, 170366-1	
Nylon insulated round terminal	N1.25-M4	J.S.T Mfg. Co., Ltd.
Cable	ROBO-TOP 600 V 0.75 mm²	Daiden Co.,Ltd.

L (m)	Part No.
3	MFMCB0030GET
5	MFMCB0050GET
10	MFMCB0100GET
20	MFMCB0200GET

Connector Kit for Power Supply Connection

Part No.	DV0P2870

● Parts composition

Title	Part No.	Number	Manufacturer	Note
Connector (10 pins)	5557-10R-210	1	Molex Inc.	For connector, CN X1 (10 pins)
Connector pin	5556PBTL	6		

● Pin configuration of connector CN X1

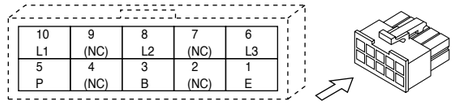

● Recommended manual crimping tool (to be prepared by customer)

Part No.	Cable material
57026-5000	UL1007
57027-5000	UL1015

<Cautions>

1. The above pin disposition is shown when viewed from the terminal inserting direction. Make a correct wiring by checking the stamped pin numbers on the connector itself.
2. Refer to P.210 for wiring and connection.
3. Do not connect anything to pins marked "NC".

Connector Kit for Motor/Encoder Connection

Part No.	DV0P3670 (Incremental 2500 pulse, 5-wire)

This option is required when you make your own encoder cable and motor cable. (Brake cable is required for brake.)

● Parts composition

Title	Part No.	Number	Manufacturer	Note
Connector (Driver side)	3E206-0100 KV	1	Sumitomo 3M or equivalent	For connector, CN X4 (6 pins)
Shell kit	3E306-3200-008	1		
Connector (6 pins)	172160-1	1	Tyco Electronics	For junction to encoder cable (6 pins)
Connector pin	170365-1	6		
Connector (4 pins)	172159-1	1	Tyco Electronics	For junction to motor power cable (4 pins)
Connector pin	170366-1	4		
Connector (6 pins)	5557-06R-210	1	Molex Inc.	For connector, CN X3 (6 pins)
Connector pin	5556PBTL	4		

<Remarks>

We may use parts equivalent to the above for shell and connector cover.

● Pin configuration of connector CN X4 plug

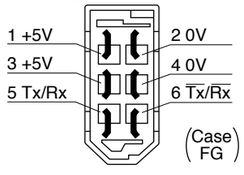

● Recommended manual crimping tool (to be prepared by customer)

Title	Part No.	Manufacturer	Cable material
For encoder cable junction	755330-1	Tyco Electronics	—
For motor power cable junction	755331-1		
For Connector CN X3	57026-5000	Molex Inc.	UL1007
	57027-5000		UL1015

<Remarks>

1. The above pin configuration is shown when viewed from the pin-soldering direction. Make a correct wiring by checking the stamped pin numbers on the connector itself.
2. Connect the shield of the wire to the case (FG) without fail.
3. For wiring and connection, refer to P.210.

● Pin configuration of encoder cable junction

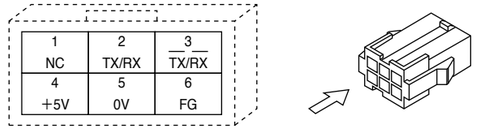

● Pin configuration of motor power cable junction

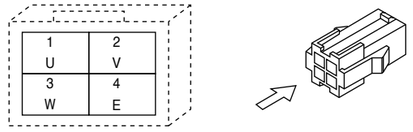

● Pin configuration of mating connector to CN X3 connector

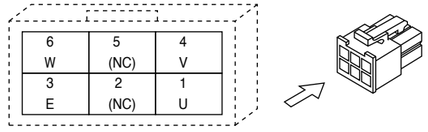

<Cautions>

1. The above pin configuration is shown when viewed from the terminal inserting direction. Make a correct wiring by checking the stamped pin numbers on the connector itself.
2. Refer to P.210 for wiring and connection.

Connector Kit for External Peripheral Equipment

Part No.	DV0P0770

● Parts composition

Title	Part No.	Number	Manufacturer	Note
Connector	10126-3000PE	1	Sumitomo 3M or equivalent	For connector, CN X5 (26 pins)
Connector cover	10326-52A0-008	1		

● Pin configuration of connector CN X5 (26 pins) (viewed from the soldering side)

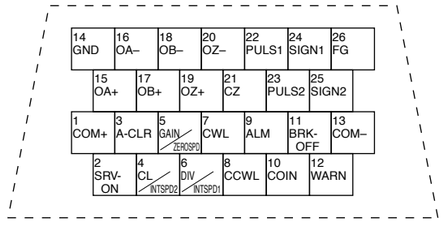

<Cautions>

1. Make a correct wiring by checking the stamped pin numbers on the connector itself.
2. Refer to P.211 for symbols and functions of the above signals.

Interface Cable/ Communication Cable/ Console

Interface Cable

Part No.	DV0P0800	Cable of 2 m is connected.

● **Dimensions**

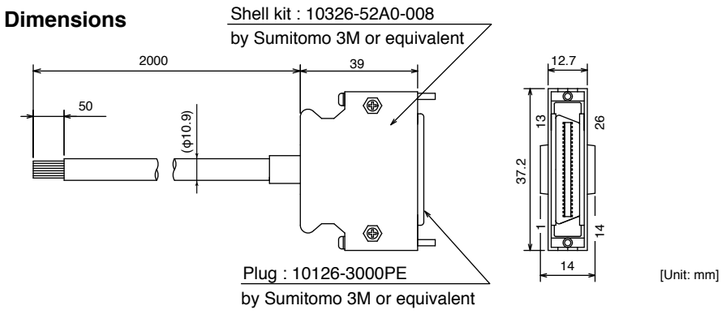

● **Wiring table**

Pin No.	Title of signal	Color or cable	Pin No.	Title of signal	Color or cable	Pin No.	Title of signal	Color or cable
1	COM+	Orange (Red 1)	10	COIN	Pink (Black 1)	19	OZ+	Pink (Red 2)
2	SRV-ON	Orange (Black 1)	11	BRK-OFF	Orange (Red 2)	20	OZ-	Pink (Black 2)
3	A-CLR	Gray (Red 1)	12	WARN	Orange (Black 2)	21	CZ	Orange (Red 3)
4	CL/INTSPD2	Gray (Black 1)	13	COM-	Gray (Red 2)	22	PULS1	Gray (Red 3)
5	GAIN/ZEROSPD	White (Red 1)	14	GND	Gray (Black 2)	23	PULS2	Gray (Black 3)
6	DIV/INTSPD1	White (Black 1)	15	OA+	White (Red 2)	24	SIGN1	White (Red 3)
7	CWL	Yellow (Red 1)	16	OA-	White (Black 2)	25	SIGN2	White (Black 3)
8	CCWL	Yellow (Black 1)	17	OB+	Yellow (Red 2)	26	FG	Orange (Black 3)
9	ALM	Pink (Red 1)	18	OB-	Yellow (Black 2)			

<Notes>

e. g. of Pin No. designation : Pin No. 1 ..... Wire color is orange, and one red dot.
Pin No. 12 ... Wire color is orange, and two black dot.

<Remarks>

The shield of this cable is not connected to a connector pin. To connect the shield to FG or GND at the driver side, use a connector kit for external device connection.

Communication Cable (For Connection with PC)

Part No.	DV0P1960

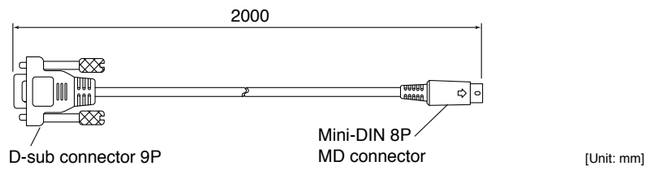

Console

Part No.	DV0P4420

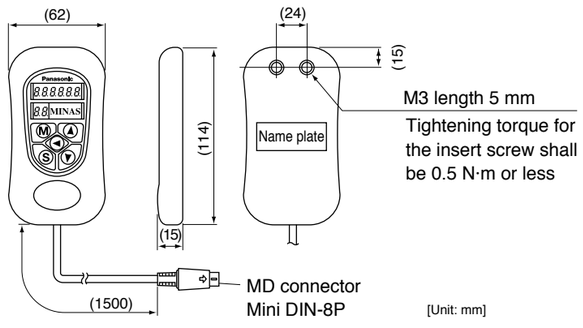

DIN Rail Mounting Unit/ External Regenerative Resistor

DIN Rail Mounting Unit

Part No.	DV0P3811

● **Dimensions**

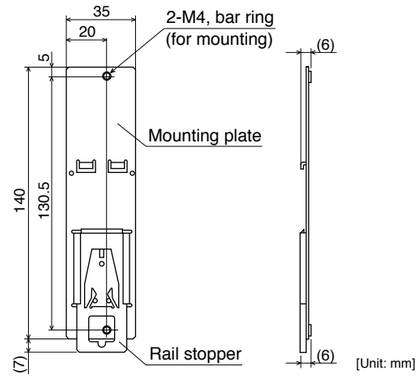

<Notes>

2 mounting screws (M4 X L8, Pan head) are attached.
Rail stopper can be extended to max. 10 mm.

<Cautions>

Please read carefully operation manual before using this product.
In addition, please do not apply excessive stress to the product.

• Driver mounted to DIN rail

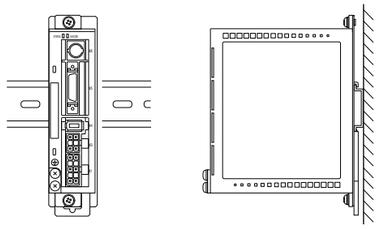

• **How to Install**

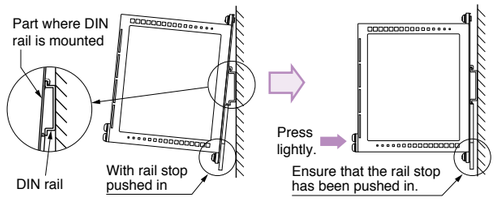

Hook the upper side of DIN rail mounting part on the DIN rail.

Press lightly the lower part of the main body of driver.

• **Removing from DIN Rail**

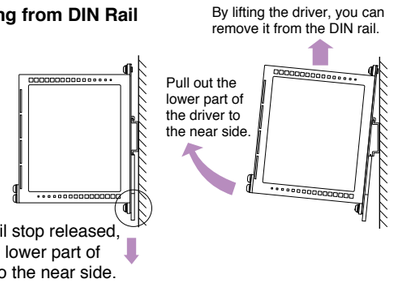

With the rail stop released, pull out the lower part of the driver to the near side.

External Regenerative Resistor

Part No.	Manufacturer's Part No.	Specifications			Note (Input Power of drive)
		Resistance	Rated power	Activation temperature of built-in fuse	
		Ω	W	°C	
DV0P2890	45M03	50	10	137^{+3}_{-2}	Single phase, 100 V
DV0P2891	45M03	100	10	137^{+3}_{-2}	Single/3-phase, 200 V

Manufactured by Iwaki Musen Kenkyusho Co., Ltd.

● **Dimensions**

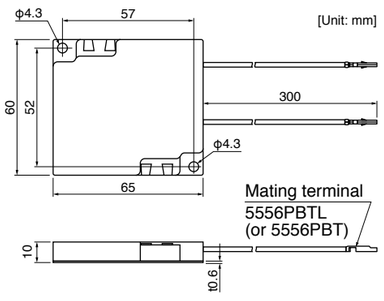

<Caution of when using external regeneration resistor>

Since it becomes high temperature, external regeneration resistor must be installed according to the contents shown below.

- **Attach to incombustibles, such as metal.**
- **Install in the place which cannot touch directly by covering with incombustibles etc.**
- **Do not install near the combustibles.**

Although the thermal cutoff is built in external regeneration resistor, the skin temperature of regeneration resistor may become high exceeding the operating temperature of thermal cutoff by the time the thermal cutoff operates in driver failure. The thermal cutoff is for preventing ignition of the regeneration resistor in driver failure, and is not for controlling the skin temperature of resistor.

<Remarks>

Thermal fuse is installed for safety.
The thermal fuse may blow due to heat dissipating condition, working temperature, supply voltage or load fluctuation. Make it sure that the surface temperature of the resistor may not exceed 100 °C at the worst running conditions with the machine, which brings large regeneration (such case as high supply voltage, load inertia is large or deceleration time is short) Please carry out air cooling if needed.

Reactor/ Surge Absorber for Motor Brake

Reactor

Frame symbol of driver	Power supply specifications	Rated output	Part No.	Fig.
MKDE	Single phase, 100 V	50 W to 100 W	DV0P227	1
	Single phase, 200 V	50 W to 100 W	DV0P220	2
	3-phase, 200 V	50 W to 200 W		
MLDE	Single phase, 100 V	200 W	DV0P228	1
	Single phase, 200 V	200 W to 400 W	DV0P220	2
	3-phase, 200 V	400 W		

Fig.1

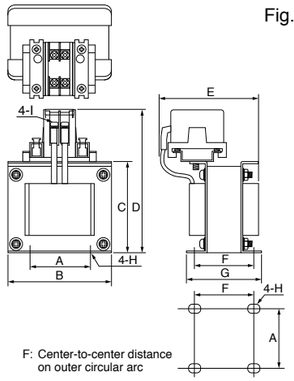

Fig.2

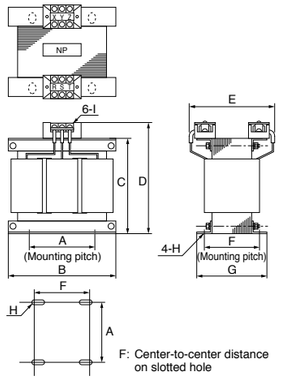

[Unit: mm]

	Part No.	A	B	C	D	E (Max)	F	G	H	I	Inductance (mH)	Rated current (A)
Fig.1	**DV0P227**	55±0.7	80±1	66.5±1	110 Max	90	41±2	55±2	4-5ϕ×10	M4	4.02	5
	DV0P228	55±0.7	80±1	66.5±1	110 Max	95	46±2	60±2	4-5ϕ×10	M4	2	8
Fig.2	**DV0P220**	65±1	125±1	(93)	136 Max	155	70+3/–0	85±2	4-7ϕ×12	M4	6.81	3

Harmonic restraint

Harmonic restraint measures are not common to all countries. Therefore, prepare the measures that meet the requirements of the destination country.
When installing a product for Japan, refer to the instruction manual available on our website.

【Panasonic Corporation, Motor Business Unit web site】
http://industrial.panasonic.com/ww/products/motors-compressors/fa-motors

<Remarks>
When using a reactor, be sure to install one reactor to one servo driver.

■ **Recommended components**

Surge Absorber for Motor Brake

Motor	Surge absorber for motor brake	
	Part No. (Manufacturer's)	Manufacturer
MUMA 50 W to 400 W	Z15D151	SEMITEC Corporation

List of Peripheral Components

List of Peripheral Components

Manufacturer	Tel No. / Home Page	Peripheral components
Panasonic Corporation Eco Solutions Company	http://panasonic.net/es/	Circuit breaker
Panasonic Corporation Automotive & Industrial Systems Company	http://panasonic.net/id/	Surge absorber Switch, Relay
Iwaki Musen Kenkyusho Co., Ltd.	+81-44-833-4311 http://www.iwakimusen.co.jp/	Regenerative resistor
SEMITEC Corporation	+81-3-3621-2703 http://www.semitec.co.jp/english2/	Surge absorber for motor brake
TDK Corporation	+81-3-5201-7229 http://www.global.tdk.com/	Ferite core for signal lines
Okaya Electric Industries Co. Ltd.	+81-3-4544-7040 http://www.okayaelec.co.jp/english/index.html	Surge absorber Noise filter
Sumitomo 3M	+81-3-5716-7290 http:/solutions.3m.com/wps/portal/3M/ja_JP/WW2/Country/	Connector
Tyco Electronics Japan G.K.	+81-44-844-8052 http://www.te.com/ja/home.html	
Japan Molex Inc.	+81-462-65-2313 http://www.molex.co.jp	
DYDEN CORPORATION	+81-3-5805-5880 http://www.dyden.co.jp/english/index.htm	Cable

* The above list is for reference only. We may change the manufacturer without notice.

MEMO

Information

Contents

EU Directives/Conformity to UL Standards/KC

EU Directives

The EU Directives apply to all such electronic products as those having specific functions and have been exported to EU and directly sold to general consumers. Those products are required to conform to the EU unified standards and to furnish the CE marking on the products.
However, our AC servos meet the relevant EU Directives for Low Voltage Equipment so that the machine or equipment comprising our AC servos can meet EU Directives.

EMC Directives

MINAS Servo System conforms to relevant standard under EMC Directives setting up certain model (condition) with certain locating distance and wiring of the servo motor and the driver. And actual working condition often differs from this model condition especially in wiring and grounding. Therefore, in order for the machine to conform to the EMC Directives, especially for noise emission and noise terminal voltage, it is necessary to examine the machine incorporating our servos.

Conformity to UL Standards

Observe the following conditions of (1) and (2) to make the system conform to UL508C (E164620).

(1) Use the driver in an environment of Pollution Degree 2 or 1 prescribed in IEC60664-1.
(e.g. Install in the control box with IP54 enclosure.)

(2) Make sure to install a circuit breaker or fuse which are UL recognized (Listed Ⓤ marked) between the power supply and the noise filter.
For rated current of circuit breaker and fuse, refer to P.21 “Driver and List of Applicable Peripheral Equipments”.
Use a copper cable with temperature rating of 75 ˚C or higher.

(3) Over-load protection level
Over-load protective function will be activated when the effective current exceeds 115 % or more than the rated current based on the time characteristics (see the graph). Confirm that the effective current of the driver does not exceed the rated current.
Set up the peak permissible current with Pr0.13 (Setup of 1st torque limit) and Pr5.22 (Setup 2nd torque limit).

■ Overload protection time characteristics

• **Motor type: 80 mm sq. or less MSMF**

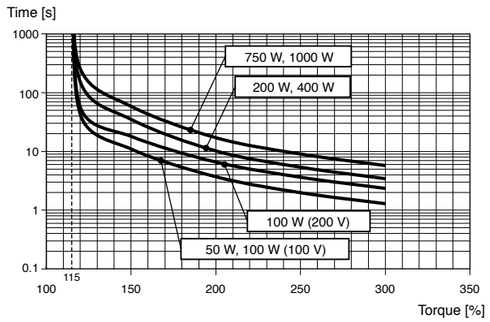

• **Motor type: 80 mm sq. or less MHMF**

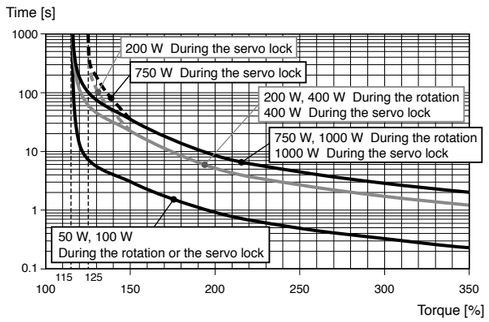

• **Motor type: 80 mm sq. or less MQMF**

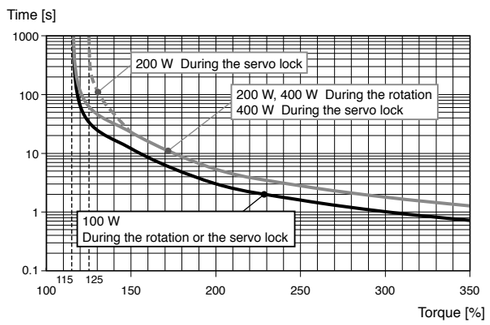

• **Motor type: 100 mm sq. or more MSMF**

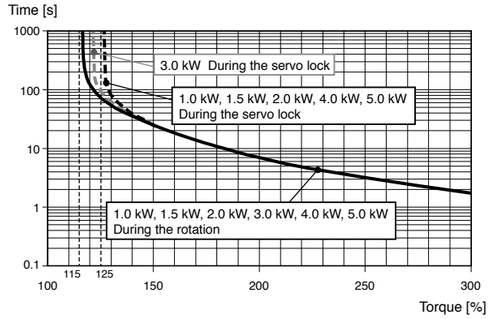

• **Motor type: 100 mm sq. or more MHMF**

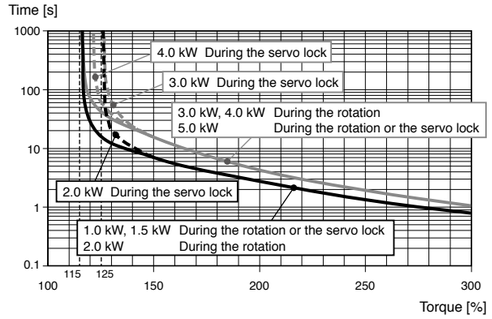

• **Motor type: 100 mm sq. or more MDMF**

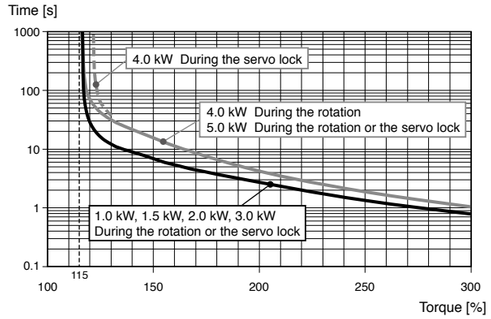

• **Motor type: 100 mm sq. or more MGMF**

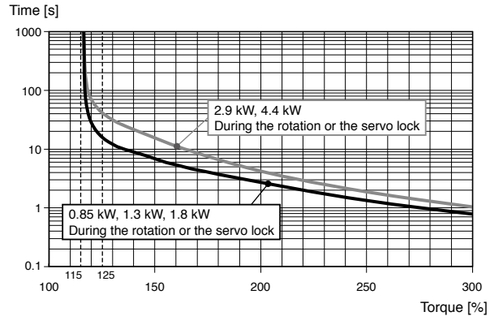

Conformed Standards

		Driver	Motor
EU Directives	EMC Directives	EN55011 EN61000-6-2 EN61000-6-4 EN61800-3	—
	Low-Voltage Directives	EN61800-5-1 EN50178	EN60034-1 EN60034-5
	Machinery Directives Functional safety *1	ISO13849-1(PL e, Cat.3) EN61508(SIL3) EN62061(SILCL 3) EN61800-5-2(SIL3, STO) IEC61326-3-1 IEC60240-1	—
UL Standards		UL508C (E164620)	UL1004-1, UL1004-6 (E327868)
CSA Standards		C22.2 No.14	C22.2 No.100-4
Radio Waves Act (South Korea) (KC) *2		KN11 KN61000-4-2,3,4,5,6,8,11	—

IEC : International Electrotechnical Commission
EN : Europaischen Normen
EMC : Electromagnetic Compatibility
UL : Underwriters Laboratories
CSA : Canadian Standards Association

Pursuant to the directive 2004/108/EC, article 9(2)
Panasonic Testing Centre
Panasonic Service Europe, a division of
Panasonic Marketing Europe GmbH
Winsbergring 15, 22525 Hamburg, F.R. Germany

● When export this product, follow statutory provisions of the destination country.

*1 A6 SE, A6 SG series doesn't correspond to the functional safety standard.

*2 Information related to the Korea Radio Law
This servo driver is a Class A commercial broadcasting radio wave generator not designed for home use. The user and dealer should be aware of this fact.

A 급 기기 (업무용 방송통신기자재)
이 기기는 업무용(A 급) 전자파적합기기로서 판매자 또는 사용자는 이 점을 주의하시기 바라며, 가정외의 지역에서 사용하는 것을 목적으로 합니다.

(대상기종 : Servo Driver)

Composition of Peripheral Equipments

Installation Environment

Use the servo driver in the environment of Pollution Degree 1 or 2 prescribed in IEC-60664-1 (e.g. Install the driver in control panel with IP54 protection structure.)

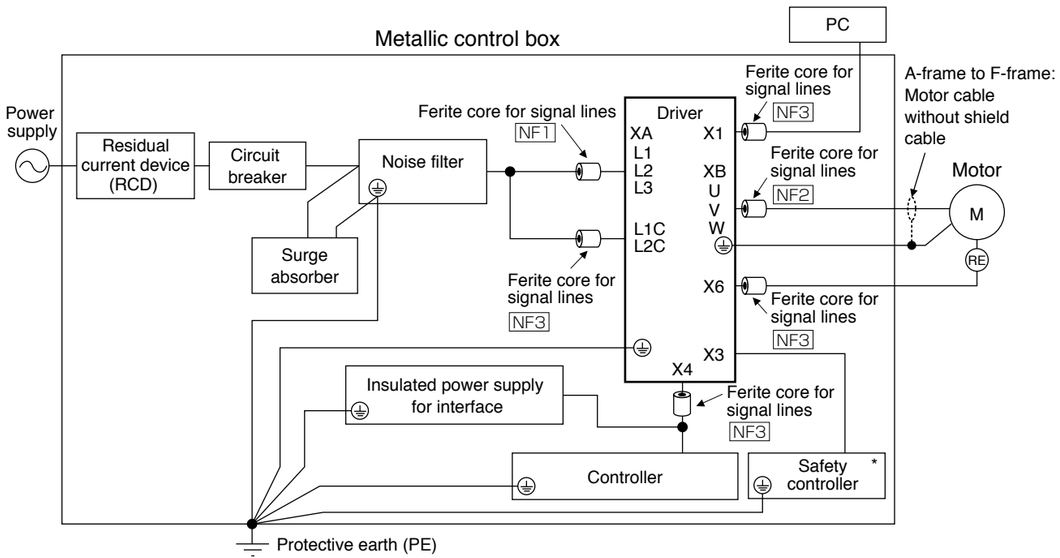

For NF1 to NF3, refer to the Table "Ferite core for Signal Line" (P.238).
* A6 SE, A6 SG is not provided with X3 terminal.

<Caution>

Use options correctly after reading Operating Instructions of the options to better understand the precautions.
Take care not to apply excessive stress to each optional part.

Power Supply

100 V type (A-frame to C-frame)	Single phase, 100 V	+10 % –15 %	to	120 V +10 % –15 %	50 Hz/60 Hz
200 V type (A-frame to D-frame)	Single/3-phase, 200 V	+10 % –15 %	to	240 V +10 % –15 %	50 Hz/60 Hz
200 V type (E-frame, F-frame)	3-phase, 200 V	+10 % –15 %	to	240 V +10 % –15 %	50 Hz/60 Hz

(1) This product is designed to be used in over-voltage category (installation category) Ⅲ of EN 61800-5-1:2007.
(2) Use an insulated power supply of DC12 V to 24 V which has CE marking or complies with EN60950.

Circuit Breaker

Install a circuit breaker which complies with IEC Standards and UL recognized (Listed and marked) between power supply and noise filter.
The short-circuit protection circuit on the product is not for protection of branch circuit.
The branch circuit should be protected in accordance with NEC and the applicable local regulations in your area.

Noise Filter

When you install one noise filter at the power supply for multi-axes application, contact the manufacturer of the noise filter. If noise margin is required, connect 2 filters in series to emphasize effectiveness.

• Options

Option part No.	Voltage specifications for driver	Manufacturer's part No.	Applicable driver (frame)	Manufacturer
DV0P4170	Single phase 100 V, 200 V	SUP-EK5-ER-6	A-frame and B-frame	Okaya Electric Ind.

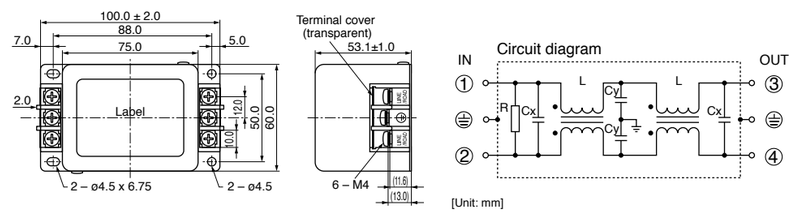

Option part No.	Voltage specifications for driver	Manufacturer's part No.	Applicable driver (frame)	Manufacturer
DV0PM20042	3-phase 200 V	3SUP-HU10-ER-6	A-frame and B-frame	Okaya Electric Ind.
	Single phase 100 V, 200 V 3-phase 200 V		C-frame	
DV0P4220	Single/3-phase 200 V	3SUP-HU30-ER-6	D-frame	
DV0PM20043	3-phase 200 V	3SUP-HU50-ER-6	E-frame	

[DV0PM20042, DV0P4220]

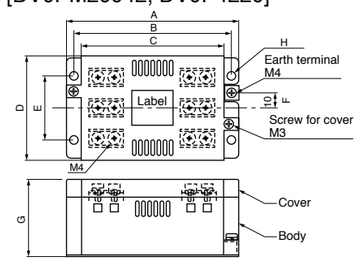

[DV0PM20043]

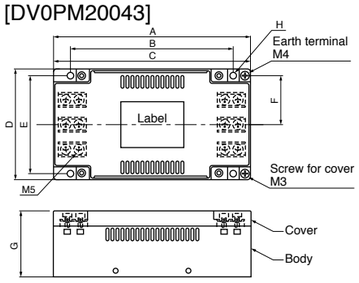

Circuit diagram

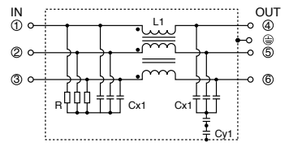

[Size] [Unit: mm]

	A	B	C	D	E	F	G	H
DV0PM20042	115	105	95	70	43	10	52	5.5
DV0P4220	145	135	125	70	50	10	52	5.5
DV0PM20043	165	136	165	90	80	40	54	5.5

For single phase application, use 2 terminals among 3 terminals, leaving the remaining terminal unconnected.

Option part No.	Voltage specifications for driver	Manufacturer's part No.	Applicable driver (frame)	Manufacturer
DV0P3410	3-phase 200 V	3SUP-HL50-ER-6B	F-frame	Okaya Electric Ind.

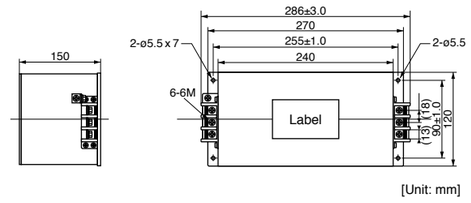

Circuit diagram

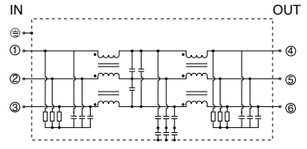

<Remarks>

• Select a noise filter of capacity that exceeds the capacity of the power source (also check for load condition).
• For detailed specification of the filter, contact the manufacturer.

Composition of Peripheral Equipments

• **Recommended components**

Part No.	Voltage specifications for driver	Current rating (A)	Applicable driver (frame)	Manufacturer
RTHN-5010	Single phase 100 V, 200 V 3-phase 200 V	10	A-frame to C-frame	TDK-Lambda Corp.
RTHN-5030		30	D-frame	
RTHN-5050		50	E-frame and F-frame	

[RTHN-5010]

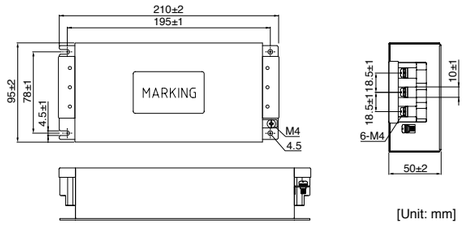

[Unit: mm]

[RTHN-5030]

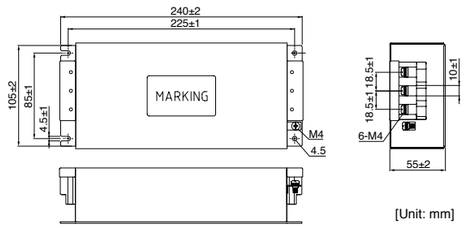

[Unit: mm]

[RTHN-5050]

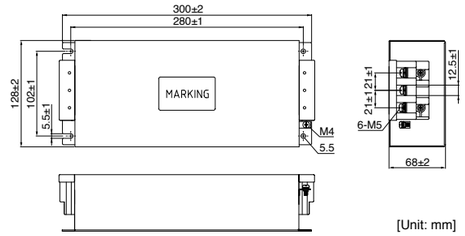

[Unit: mm]

<Remarks>
- Select a noise filter of capacity that exceeds the capacity of the power source (also check for load condition).
- For detailed specification of the filter, contact the manufacturer.
- When two or more servo drivers are used with a single noise filter at the common power source, consult with the noise filter manufacturer.

Surge Absorber

Provide a surge absorber for the primary side of noise filter.

Option part No.	Voltage specifications for driver	Manufacturer's part No.	Manufacturer
DV0P1450	3-phase 200 V	R·A·V-781BXZ-4	Okaya Electric Ind.
DV0P4190	Single phase 100 V, 200 V	R·A·V-781BWZ-4	

[DV0P1450]

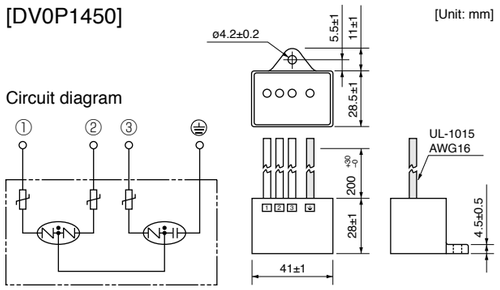

[Unit: mm]

[DV0P4190]

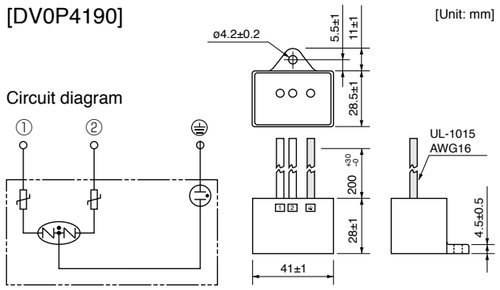

[Unit: mm]

<Remarks>
Remove this surge absorber when you perform dielectric test on the machine, or surge absorber might be damaged.

Ferite core for Signal Lines

Install ferite core for signal lines to all cables (power cable, motor cable, encoder cable and interface cable)

Symbol*1	Cable Name	100 V/200 V Driver frame symbol	Option part No.	Manufacturer's part No.	Manufacturer	Qty.
NF1	Power cable	A, B, C, D	DV0P1460	ZCAT3035-1330	TDK Corp.	4
		E, F	Recommended components	RJ8035	KK-CORP.CO.JP	1
NF2	Motor cable	A, B, C, D, E, F	DV0P1460	ZCAT3035-1330	TDK Corp.	4
NF3	• 24 V Power cable • Encoder cable • Interface cable • USB cable • Control power cable	Common (to all frames)	DV0P1460	ZCAT3035-1330	TDK Corp.	4

*1 For symbols, refer to the Block Diagram “Installation Environment” (P.235).

<Remarks>
To connect the ferite core to the connector XB connection cable, adjust the sheath length at the tip of the cable, as required.

<Caution>
Fix the signal line ferite core in order to prevent excessive stress to the cables.

Fig.1: DV0P1460 (Option)

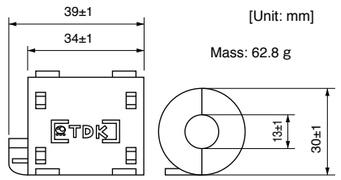

[Unit: mm]

Mass: 62.8 g

Fig.2: RJ8035, RJ8095
(Recommended components)

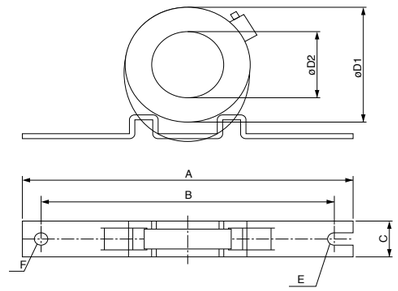

Fig.3: T400-61D
(Recommended components)

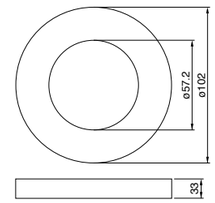

[Unit: mm]

<Fig.2: Dimensions>

Part No.	Current	100 kHz (μH)	Size [Unit: mm]							
			A	B	C	D1	D2	Core thickness	E	F
RJ8035	35 A	9.9±3	170	150	23	80	53	24	R3.5	7
RJ8095	95 A	7.9±3	200	180	34	130	107	35	R3.5	7

Residual Current Device

Install a type B Residual current device (RCD) at primary side of the power supply.
Type B: Residual current device which detects a direct-current ingredient.

Grounding

(1) Connect the protective earth terminal (⏚) of the driver and the protective earth terminal (PE) of the control box without fail to prevent electrical shocks.
(2) Do not make a joint connection to the protective earth terminals (⏚). 2 terminals are provided for protective earth.

<Note>
For driver and applicable peripheral equipments, refer to P.21 “Driver and List of Applicable Peripheral Equipments”.

Compliance to EU and EMC Directives

EU Directives

The EU Directives apply to all such electronic products as those having specific functions and have been exported to EU and directly sold to general consumers. Those products are required to conform to the EU unified standards and to furnish the CE marking on the products. MINAS AC Servos conforms to the EU Directives for Low Voltage Equipment so that the machine incorporating our servos has an easy access to the conformity to relevant EU Directives for the machine.

EMC Directives

MINAS Servo System conform to relevant standard under EMC Directives setting up certain model (condition) with certain locating distance and wiring of the servo motor and the driver. And actual working condition often differs from this model condition especially in wiring and grounding. Therefore, in order for the machine to conform to the EMC Directives, especially for noise emission and noise terminal voltage, it is necessary to examine the machine incorporating our servos.

Conformed Standards

Subject	Conformed Standard		
Motor	IEC60034-1	IEC60034-5 UL1004 CSA22.2 No.100	Conforms to Low- Voltage Directives
Motor and driver	EN50178	UL508C CSA22.2 No.14	
	EN55011	Radio Disturbance Characteristics of Industrial, Scientific and Medical (ISM) Radio-Frequency Equipment	Conforms to references by EMC Directives
	EN61000-6-2	Immunity for Industrial Environments	
	IEC61000-4-2	Electrostatic Discharge Immunity Test	
	IEC61000-4-3	Radio Frequency Electromagnetic Field Immunity Test	
	IEC61000-4-4	Electric High-Speed Transition Phenomenon/Burst Immunity Test	
	IEC61000-4-5	Lightening Surge Immunity Test	
	IEC61000-4-6	High Frequency Conduction Immunity Test	
	IEC61000-4-11	Instantaneous Outage Immunity Test	

IEC : International Electrotechnical Commission
EN : Europaischen Normen
EMC : Electromagnetic Compatibility
UL : Underwriters Laboratories
CSA : Canadian Standards Association

Pursuant to at the directive 2004/108/EC,article 9(2)

Panasonic Testing Centre
Panasonic Service Europe,
a division of Panasonic Marketing Europe GmbH
Winsbergring 15,22525 Hamburg,F.R.Germany

Composition of Peripheral Components

<Precautions in using options>
Use options correctly after reading operation manuals of the options to better understand the precautions. Take care not to apply excessive stress to each optional part.

Installation Environment

Use Minas driver in environment of Pollution Degree 1 or 2 prescribed in IEC-60664-1 (e.g. Install the driver in control panel with IP54 protection structure.)

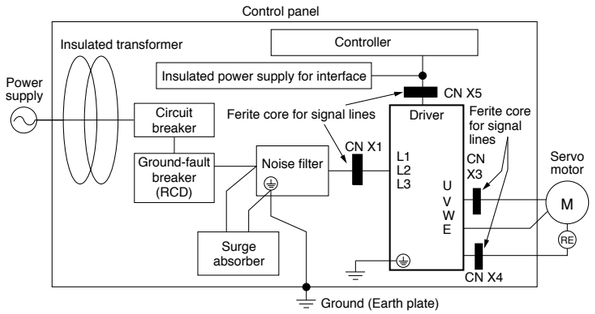

Power Supply

100 V system	Single phase, 100 V +10 % –15 %	to 115 V +10 % –15 %	50 Hz/60 Hz
200 V system	Single phase, 200 V +10 % –15 %	to 240 V +10 % –15 %	50 Hz/60 Hz
200 V system	3-phase, 200 V +10 % –15 %	to 240 V +10 % –15 %	50 Hz/60 Hz

(1) Use the power supply under an environment of Overvoltage Category II specified in IEC60664-1.
(2) For a interface power supply, use the insulated one with 12 VDC to 24 VDC which conforms to CE Marking or EN Standards (EN60950).

Circuit Breaker

Connect a circuit breaker which conforms to IEC standards and is UL recognized (UL Listed, UL marked), between the power supply and the noise filter.

Noise Filter

When you install one noise filter in the power supply for multi axis application, consult with the manufacture of the filter.

Option part No.	Part No.	Manufacturer
DV0P4160	3SUP-HU10-ER-6	Okaya Electric Industries Co.

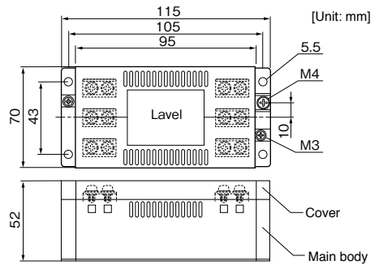

Surge Absorber

Install a surge absorber at primary side of the noise filter.

Option part No.	Driver voltage spec	Part No.	Manufacturer
DV0P1450	3-phase, 200 V	R·A·V-781BXZ-4	Okaya Electric

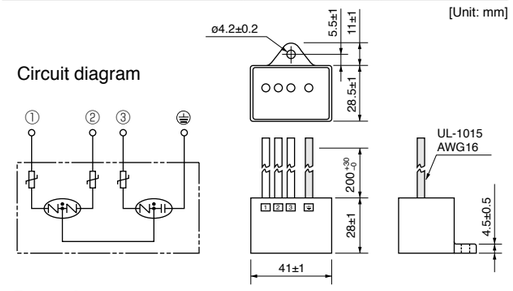

Option part No.	Driver voltage spec	Part No.	Manufacturer
DV0P4190	Single phase, 100 V, 200 V	R·A·V-781BWZ-4	Okaya Electric

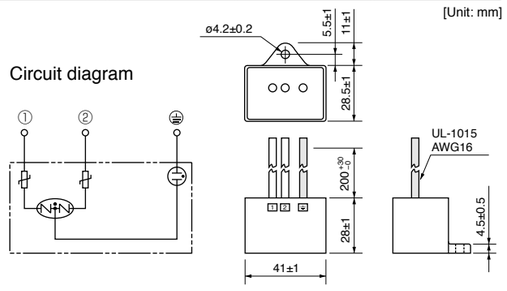

<Remarks>
Remove this surge absorber when you perform dielectric test on the machine, or surge absorber might be damaged.

Ferite core for Signal Lines

Install ferite core for signal lines to all cables (Power line, motor cable, encoder cable, interface cable)

Option part No.	Part No.	Qty.	Manufacturer
DV0P1460	ZCAT3035-1330	4	TDK Corp.

<Caution>
- Please fix a line ferite core to avoid excessive stress to the cable.
- When using multiple axes, noise generated from each driver might influence driver and peripheral equipment and result to malfunction.
  Please insert line ferite core between driver and motor wires (U, V, W but grounding).
  (Please refer to P.239 "Composition of Peripheral Components".)

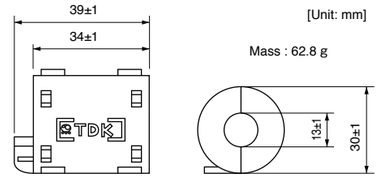

Grounding

(1) Connect the protective earth terminal of the driver (⏚) and protective earth terminal of the control panel (PE) without fail to prevent electrical shocks.
(2) Do not co-clamp to the ground terminals (⏚). Two ground terminals are provided.

Ground-Fault Breaker

Install a ground fault curcuit braker (RCD) to the primary side of the power supply.
Please use B-type (DC sensitive) ground fault circuit breakers defined in IEC60947-2, JISC8201-2-2.

Conformity to UL Standards

Observe the following conditions of (1) and (2) to make the system conform to UL508C (File No. E164620).
(1) Use the driver in an environment of Pollution Degree 2 or 1 prescribed in IEC60664-1. (e.g. Install in the control box with IP54 enclosure.)
(2) Install a circuit breaker or fuse which are UL recognized (LISTED UL marked) between the power supply and the noise filter without fail.

AC Servo Motor Capacity Selection Software
Option Selection Software for AC Servo Motor

AC Servo Motor Capacity Selection Software

We have prepared PC software "M-SELECT" for AC servo motor capacity selection.
Consult our sales representative or authorized distributor.

• Three-step selection

1. Select components and specified values

Select appropriate mechanical parameter items and fill them with parameter values derived from the real machine. To simulate the target machine as practical as possible, use maximum number of parameters available.

2. Enter operation pattern

Input the planned operation pattern that will contain [speed and rotation standard] or [absolute position standard] with optional settings such as S-acceleration/deceleration.

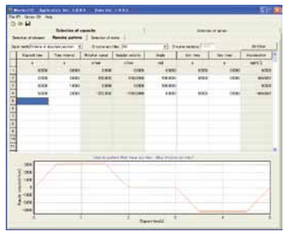

3. Select the motor

When the data required in step 1 and 2 above have been input, the software lists the motors, which will be appropriate to use with your machine. Select the motor that is best suitable for your machine application.

Details of motor

Once the motor is selected, specifications of the motor and driver, and details of reason for determination are displayed and may be printed out.

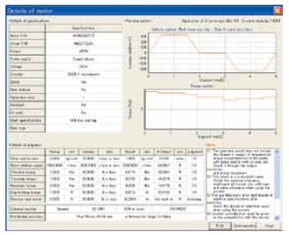

Option Selection Software for AC Servo Motor

We have prepared PC software to enable fast, easy, and correct option selection, a complicated job without the software.

• Two procedures for option selection

1. Selection according to driver series and motor type

Suitable option can be selected by selecting driver series, motor type and motor specification through pulldown menu.

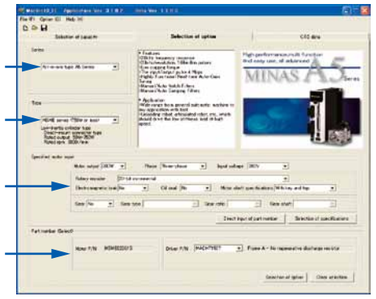

2. Entry of model number

If you know the model number based on the servo motor and driver currently used, enter the model number.

Result of selection

Tab sheet specific to each of option model numbers is used for easier identification of the desired option.

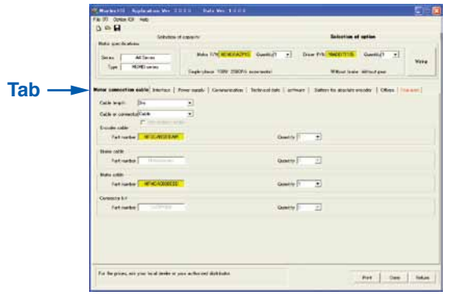

* When you are using the motor capacity selection software, simply press [Option Selection] tab and the screen as shown right will appear.

Please download from our web site and use after install to the PC.
http://industrial.panasonic.com/ww/products/motors-compressors/fa-motors

Organization of the System of Units

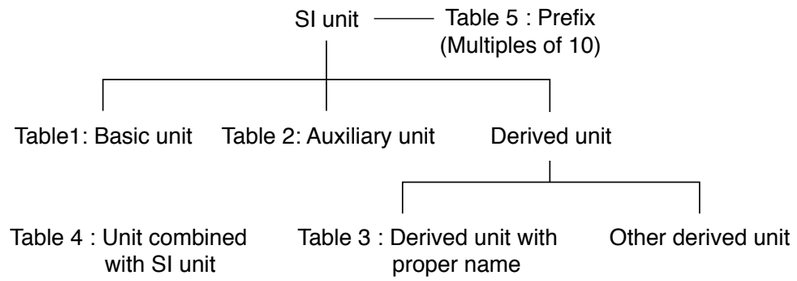

Table1: Basic unit

Quantity	Name of unit	Symbol of unit
Length	meter	m
Weight	kilogram	kg
Time	second	s
Current	ampere	A
Thermodynamic temperature	kelvin	K
Amount of substance	mol	mol
Luminous intensity	candela	cd

Table 2: Auxiliary unit

Quantity	Name of unit	Symbol of unit
Plane angle	radian	rad
Solid angle	steradian	sr

Table 3: Major derived unit with proper name

Quantity	Name	Symbol of unit	Derivation from basic unit, auxiliary unit or other derived unit
Frequency	hertz	Hz	1 Hz = 1 s^{-1}
Force	newton	N	1 N = 1 kg·m/s^2
Pressure, Stress	pascal	Pa	1 Pa = 1 N/m^2
Energy, Work, Amount of heat	joule	J	1 J = 1 N·m
Amount of work, Work efficiency, Power, Electric power	watt	W	1 W = 1 J/s
Electric charge, Amount of electricity	coulomb	C	1 C = 1 A·s
Electric potential, Potential difference, Voltage, Electromotive force	volt	V	1 V = 1 J/C
Electrostatic capacity, Capacitance	farad	F	1 F = 1 C/V
Electric resistance	ohm	Ω	1 Ω = 1 V/A
Electric conductance	siemens	S	1 S = 1 $Ω^{-1}$
Magnetic flux	weber	Wb	1 Wb = 1 V·s
Magnetic flux density, Magnetic induction	tesla	T	1 T = 1 Wb/m^2
Inductance	henry	H	1 H = 1 Wb/A
Degree centigrade (Celsius)	degree centigrade (Celsius) / degree	˚C	t ˚C = (t+273.15) K
Luminous flux	lumen	lm	1 lm = 1 cd·sr
Illuminance	lux	lx	1 lx = 1 lm/m^2

Table 4: Unit combined with SI unit

Quantity	Name	Symbol of unit
Time	minute	min
	hour	h
	day	d
Plane angle	degree	°
	minute	'
	second	"
Volume	liter	l, L
Weight	ton	t

Table 5: Prefix

Multiples powered to unit	Prefix	
	Name	Symbol
10^{18}	exa	E
10^{15}	peta	P
10^{12}	tera	T
10^{9}	giga	G
10^{6}	mega	M
10^{3}	kilo	k
10^{2}	hecto	h
10	deca	da
10^{-1}	deci	d
10^{-2}	centi	c
10^{-3}	milli	m
10^{-6}	micro	μ
10^{-9}	nano	n
10^{-12}	pico	p
10^{-15}	femto	f
10^{-18}	atto	a

Major Compatible Unit

Quantity	Symbol of conventional unit	Symbol of SI unit and compatible unit	Conversion value
Length	μ (micron)	μm	1 μ = 1 μm (micrometer)
Acceleration	Gal	m/s^2	1 Gal = 10^{-2} m/s^2
	G	m/s^2	1 G = 9.80665 m/s^2
Frequency	c/s, c	Hz	1 c/s = Hz
Revolving speed, Number of revolutions	rpm	s^{-1} or min^{-1}, r/min	1 rpm = 1 min^{-1}
Weight	kgf	–	Same value
Mass	–	kg	
Weight flow rate	kgf/s	–	Same value
Mass flow rate	–	kg/s	
Specific weight	kgf/m^3	–	Same value
Density	–	kg/m^3	
Specific volume	m^3/kgf	m^3/kg	Same value
Load	kgf	N	1 kgf = 9.80665 N
Force	kgf	N	1 kgf = 9.80665 N
	dyn	N	1 dyn = 10^{-5} N
Moment of force	kgf·m	N·m	1 kgf·m = 9.806 N·m
Pressure	kgf/cm^2	Pa, bar (1) or kgf/cm^2	1 kgf/cm^2 = 9.80665 x 10^4 Pa
			= 0.980665 bar
	at (Engineering atmospheric pressure)	Pa	1 at = 9.80665 x 10^4 Pa
	atm (Atmospheric pressure)	Pa	1 atm = 1.01325 x 10^5 Pa
	mH_2O, mAq	Pa	1 mH_2O = 9.80665 x 10^3 Pa
	mmHg	Pa or mmHg (2)	1 mmHg = 133.322 Pa
	Torr	Pa	
Stress	kgf/mm^2	Pa or N/m^2	1 kgf/mm^2 = 9.80665 x 10^6 Pa
			=9.80665 x 10^6 N/m^2
	kgf/cm^2	Pa or N/m^2	1 kgf/cm^2 = 9.80665 x 10^4 Pa
			= 9.80665 x 10^4 N/m^2
Elastic modulus	kgf/m^2	Pa or N/m^2	1 kgf/m^2 = 9.80665 Pa = 9.80665 N/m^2
			1 kgf/cm^2 = 9.80665 x 10^4 N/m^2
Energy, Work	kgf·m	J (joule)	1 kgf·m = 9.80665 J
	erg	J	1 erg = 10^{-7} J
Work efficiency, Power	kgf·m/s	W (watt)	1 kgf·m/s = 9.80665 W
	PS	W	1 PS = 0.7355 kW
Viscosity	PP	Pa·s	1 P = 0.1 Pa·s
Kinetic viscosity	St	mm^2/s	10^{-2} St = 1 mm^2/s
Thermodynamic temperature	K	K (kelvin)	1 K = 1 K
Temperature interval	deg	K (3)	1 deg = 1 K
Amount of heat	cal	J	1 cal = 4.18605 J
Heat capacity	cal/˚C	J/K (3)	1 cal/˚C = 4.18605 J/K
Specific heat, Specific heat capacity	cal/ (kgf·˚C)	cal/ (kgf·K)(3)	1 cal/ (kgf·˚C) = 4.18605 J/ (kg·K)
Entropy	cal/K	J/K	1 cal/K = 4.18605 J/K
Specific entropy	cal/ (kgf·K)	J/(kg·K)	1 cal/ (kgf·K) = 4.18605 J/ (kg·K)
Internal energy (Enthalpy)	cal	J	1 cal = 4.18605 J
Specific internal energy (Specific enthalpy)	cal/kgf	J/kg	1 cal/kgf = 4.18605 J/kg
Heat flux	cal/h	W	1 kcal/h = 1.16279 W
Heat flux density	cal/ (h·m^2)	W/m^2	1 kcal/ (h·m^2) = 1.16279 W/m^2
Thermal conductivity	cal/ (h·m·˚C)	W/ (m·K) (3)	1 kcal/ (h·m·˚C) = 1.16279 W/ (m·K)
Coefficient of thermal conductivity	cal/ (h·m^2·˚C)	W/ (m^2·K) (3)	1 kcal/ (h·m^2·˚C) = 1.16279 W/ (m^2·K)
Intensity of magnetic field	Oe	A/m	1 Oe = 10^3 / (4π) A/m
Magnetic flux	Mx	Wb (weber)	1 Mx = 10^{-8} Wb
Magnetic flux density	Gs,G	T (tesla)	1 Gs = 10^{-4} T

Note
(1) Applicable to liquid pressure. Also applicable to atmospheric pressure of meteorological data, when “bar” is used in international standard.
(2) Applicable to scale or indication of blood pressure manometers.
(3) “˚C” can be substituted for “K”.

Flow of Motor Selection

Flow of Motor Selection

1. Definition of mechanism to be driven by motor.
Define details of individual mechanical components (ball screw length, lead and pulley diameters, etc.)

<Typical mechanism>

Ball screw mechanism

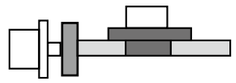

Belt mechanism

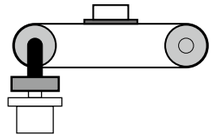

Rack & pinion, etc.

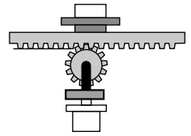

2. Definition of operating pattern.
Acceleration/deceleration time, Constant-velocity time, Stop time, Cycle time, Travel distance

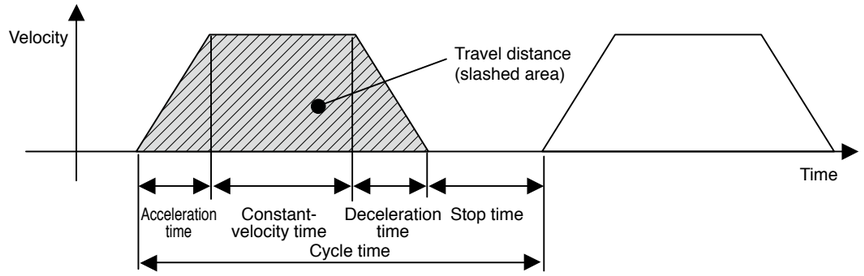

Note) Selection of motor capacity significantly varies depending on the operating pattern.
The motor capacity can be reduced if the acceleration/deceleration time and stop time are set as long as possible.

3. Calculation of load inertia and inertia ratio.
Calculate load inertia for each mechanical component. (Refer to "General inertia calculation method" described later.)
Divide the calculated load inertia by the inertia of the selected motor to check the inertia ratio.
For calculation of the inertia ratio, note that the catalog value of the motor inertia is expressed as "× 10^{-4} kg·m^2".

4. Calculation of motor velocity
Calculate the motor velocity from the moving distance, acceleration / deceleration time and constant-velocity time.

5. Calculation of torque
Calculate the required motor torque from the load inertia, acceleration/deceleration time and constant-velocity time.

6. Calculation of motor
Select a motor that meets the above 3 to 5 requirements.

Description on the Items Related to Motor Selection

Description on the Items Related to Motor Selection

1. Torque

(1) Peak torque

Indicate the maximum torque that the motor requires during operation (mainly in acceleration and deceleration steps). The reference value is 80% or less of the maximum motor torque. If the torque is a negative value, a regenerative discharge resistor may be required.

(2) Traveling torque, Stop holding torque

Indicates the torque that the motor requires for a long time. The reference value is 80% or less of the rated motor torque. If the torque is a negative value, a regenerative discharge resistor may be required.

Traveling torque calculation formula for each mechanism

Ball screw mechanism

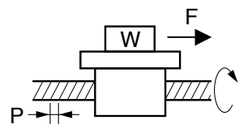

Traveling torque $T_f = \frac{P}{2\pi\eta}(\mu g W + F)$

W : Weight [kg]
P : Lead [m]
F : External force [N]
η : Mechanical efficiency
μ : Coefficient of friction
g : Acceleration of gravity 9.8[m/s²]

Belt mechanism

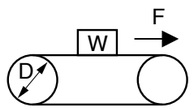

Traveling torque $T_f = \frac{D}{2\pi\eta}(\mu g W + F)$

W : Weight [kg]
P : Pulley diameter [m]
F : External force [N]
η : Mechanical efficiency
μ : Coefficient of friction
g : Acceleration of gravity 9.8[m/s²]

(3) Effective torque

Indicates a root-mean-square value of the total torque required for running and stopping the motor per unit time. The reference value is approx. 80% or less of the rated motor torque.

$$T_{rms} = \sqrt{\frac{T_a^2 \times t_a + T_f^2 \times t_b + T_d^2 \times t_d}{t_c}}$$

T_a : Acceleration torque [N·m]
T_f : Traveling torque [N·m]
T_d : Deceleration torque [N·m]
t_a : Acceleration time [s]
t_b : Constant-velocity time [s]
t_d : Deceleration time [s]
t_c : Cycle time [s] (Run time + Stop time)

2. Motor velocity

Maximum velocity

Maximum velocity of motor in operation: The reference value is the rated velocity or lower value.
When the motor runs at the maximum velocity, you must pay attention to the motor torque and temperature rise. For actual calculation of motor velocity, see "Example of motor selection" described later.

3. Inertia and inertia ratio

Inertia is like the force to retain the current moving condition.
Inertia ratio is calculated by dividing load inertia by rotor inertia.
Generally, for motors with 750 W or lower capacity, the inertia ratio should be “20” or less. For motors with 1000 W or higher capacity, the inertia ratio should be “10” or less.
If you need quicker response, a lower inertia ratio is required.
(For example, when the motor takes several seconds in acceleration step, the inertia ratio can be further increased.)

General inertia calculation method

Shape	J calculation formula	Shape	J calculation formula
Disk 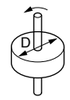	$J = \frac{1}{8} W D^2$ [kg·m²] W : Weight [kg] D : Outer diameter [m]	**Hollow cylinder** 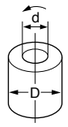	$J = \frac{1}{8} W (D^2 + d^2)$ [kg·m²] W : Weight [kg] D : Outer diameter [m] d : Inner diameter [m]
Prism 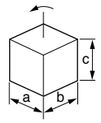	$J = \frac{1}{12} W (a^2 + b^2)$ [kg·m²] W : Weight [kg] a, b, c : Side length [m]	**Uniform rod** 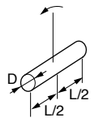	$J = \frac{1}{48} W (3D^2 + 4L^2)$ [kg·m²] W : Weight [kg] D : Outer diameter [m] L : Length [m]
Straight rod 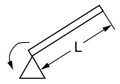	$J = \frac{1}{3} W L^2$ [kg·m²] W : Weight [kg] L : Length [m]	**Separated rod** 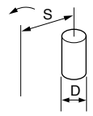	$J = \frac{1}{8} W D^2 + W S^2$ [kg·m²] W : Weight [kg] D : Outer diameter [m] S : Distance [m]
Reduction gear 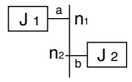	Inertia on shaft "a" $J = J_1 + (\frac{n_2}{n_1})^2 J_2$[kg·m²] n_1 : A rotational speed of a shaft [r/min] n_2 : A rotational speed of b shaft [r/min]		
Conveyor 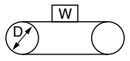	$J = \frac{1}{4} W D^2$ [kg·m²] W : Workpiece weight on conveyor [kg] D : Drum diameter [m] * Excluding drum J	**Ball screw** 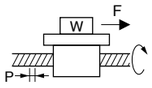	$J = J_B + \frac{W \cdot P^2}{4\pi^2}$ [kg·m²] W : Weight [kg] P : Lead J_B : J of ball screw

If weight (W [kg]) is unknown, calculate it with the following formula:

Weight W[kg]=Density ρ [kg/m³] x Volume V[m³]

Density of each material

Iron ρ =7.9 x 10³ [kg/m³]
Aluminum ρ =2.8 x 10³ [kg/m³]
Brass ρ =8.5 x 10³ [kg/m³]

To Drive Ball Screw Mechanism

To Drive Ball Screw Mechanism

1. Example of motor selection for driving ball screw mechanism

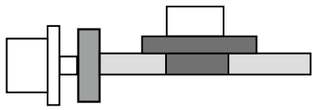

Workpiece weight $W_A = 10$ [kg]
Ball screw length $B_L = 0.5$ [m]
Ball screw diameter $B_D = 0.02$ [m]
Ball screw lead $B_P = 0.02$ [m]
Ball screw efficiency $B\eta = 0.9$
Travel distance 0.3[m]
Coupling inertia $J_C = 10 \times 10^{-6}$ [kg·m²] (Use manufacturer-specified catalog value, or calculation value.)

2. Running pattern :

Acceleration time $t_a = 0.1$ [s]
Constant-velocity time $t_b = 0.8$ [s]
Deceleration time $t_d = 0.1$ [s]
Cycle time $t_c = 2$ [s]
Travel distance 0.3[m]

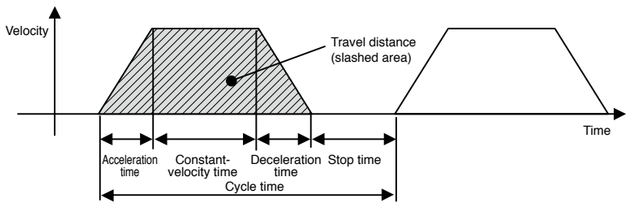

3. Ball screw weight

$$B_W = \rho \times \pi \times \left(\frac{B_D}{2}\right)^2 \times B_L = 7.9 \times 10^3 \times \pi \times \left(\frac{0.02}{2}\right)^2 \times 0.5$$
$$= 1.24 \text{ [kg]}$$

4. Load inertia

$$J_L = J_C + J_B = J_C + \frac{1}{8} B_W \times B_D^2 + \frac{W_A \cdot B_P^2}{4\pi^2}$$
$$= 0.00001 + (1.24 \times 0.02^2) / 8 + 10 \times 0.02^2 / 4\pi^2$$
$$= 1.73 \times 10^{-4} \text{ [kg·m}^2\text{]}$$

5. Provisional motor selection

In case of MSMF 200 W motor : $J_M = 0.14 \times 10^{-4}$ [kg·m²]

6. Calculation of inertia ratio

$J_L / J_M = 1.73 \times 10^{-4} / 0.14 \times 10^{-4}$ Therefore, the inertia ratio is "12.3" (less than "30")
(In case of MSMF 100 W motor: $J_M = 0.048 \times 10^{-4}$ Therefore, the inertia ratio is "36.0".)

7. Calculation of maximum velocity (Vmax)

$$\frac{1}{2} \times \text{Acceleration time} \times V_{max} + \text{Constant-velocity time} \times V_{max} + \frac{1}{2} \times \text{Deceleration time} \times V_{max} = \text{Travel distance}$$
$$\frac{1}{2} \times 0.1 \times V_{max} + 0.8 \times V_{max} + \frac{1}{2} \times 0.1 \times V_{max} = 0.3$$
$$0.9 \times V_{max} = 0.3$$
$$V_{max} = 0.3 / 0.9 = 0.334 \text{ [m/s]}$$

8. Calculation of motor velocity (N [r/min]) Ball screw lead per resolution: $B_P = 0.02$ [m]

$N = 0.334 / 0.02 = 16.7$ [r/s]
$= 16.7 \times 60 = 1002$ [r/min] $<$ 3000 [r/min] (Rated velocity of MSMF 200 W motor)

9. Calculation of torque

Traveling torque
$$T_f = \frac{B_P}{2\pi B\eta}(\mu g W_A + F) = \frac{0.02}{2\pi \times 0.9}(0.1 \times 9.8 \times 10 + 0)$$
$$= 0.035 \text{ [N·m]}$$

Acceleration torque
$$T_a = \frac{(J_L + J_M) \times 2\pi N[r/s]}{\text{Acceleration time [s]}} + \text{Traveling torque}$$
$$= \frac{(1.73 \times 10^{-4} + 0.14 \times 10^{-4}) \times 2\pi \times 16.7}{0.1} + 0.035$$
$$= 0.196 + 0.035 = 0.231 \text{ [N·m]}$$

To Drive Ball Screw Mechanism Example of Motor Selection

Deceleration torque
$$T_d = \frac{(J_L + J_M) \times 2\pi N[r/s]}{\text{Deceleration time [s]}} - \text{Traveling torque}$$
$$= \frac{(1.73 \times 10^{-4} + 0.14 \times 10^{-4}) \times 2\pi \times 16.7}{0.1} - 0.035$$
$$= 0.196 - 0.035 = 0.161 \text{ [N·m]}$$

10. Verification of maximum torque

Acceleration torque = $T_a = 0.231$ [N·m] $<$ 1.91 [N·m] (Maximum torque of MSMF 200 W motor)

11. Verification of effective torque

$$T_{rms} = \sqrt{\frac{T_a^2 \times t_a + T_f^2 \times t_b + T_d^2 \times t_d}{t_c}}$$
$$= \sqrt{\frac{0.231^2 \times 0.1 + 0.035^2 \times 0.8 + 0.161^2 \times 0.1}{2}}$$
$$= 0.067 \text{ [N·m]} < 0.64 \text{ [N·m]}$$ (Rated torque of MSMF 200 W motor)

12. Judging from the inertia ratio calculated above, selection of 200 W motor is preferable, although the torque margin is significantly large.

Example of Motor Selection

Example of motor selection for timing belt mechanism

1.Mechanism
Workpiece weight $W_A = 2$[kg] (including belt)
Pulley diameter $P_D = 0.05$[m]
Pulley weight $W_P = 0.5$[kg] (Use manufacturer-specified catalog value, or calculation value.)
Mechanical efficiency $B\eta = 0.8$
Coupling inertia $J_C = 0$ (Direct connection to motor shaft)
Belt mechanism inertia J_B
Pulley inertia J_P

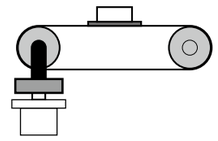

2. Running pattern

Acceleration time $t_a = 0.1$[s]
Constant-velocity time $t_b = 0.8$[s]
Deceleration time $t_d = 0.1$[s]
Cycle time $t_c = 2$[s]
Travel distance 1[m]

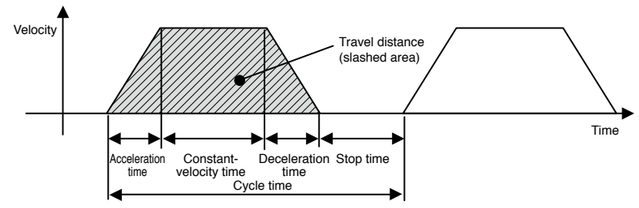

3. Load inertia $J_L = J_C + J_B + J_P$

$$= J_C + \frac{1}{4} W_A \times P_D^2 + \frac{1}{8} W_P \times P_D^2 \times 2$$
$$= 0 + \frac{1}{4} \times 2 \times 0.05^2 + \frac{1}{8} \times 0.5 \times 0.05^2 \times 2$$
$$= 0.00156 = 15.6 \times 10^{-4} \text{ [kg·m}^2\text{]}$$

4. Provisional motor selection

In case of MSMF 750 W motor : $J_M = 0.96 \times 10^{-4}$ [kg·m²]

5. Calculation of inertia ratio

$J_L / J_M = 15.6 \times 10^{-4} / 0.96 \times 10^{-4}$ Therefore, the inertia ratio is "16.3" (less than "20")

Example of Motor Selection

6. Calculation of maximum velocity (Vmax)

$$\frac{1}{2} \times \text{Acceleration time} \times \text{Vmax} + \text{Constant-velocity time} \times \text{Vmax} + \frac{1}{2} \times \text{Deceleration time} \times \text{Vmax} = \text{Travel distance}$$

$$\frac{1}{2} \times 0.1 \times \text{Vmax} + 0.8 \times \text{Vmax} + \frac{1}{2} \times 0.1 \times \text{Vmax} = 1$$

$$0.9 \times \text{Vmax} = 1$$

$$\text{Vmax} = 1 / 0.9 = 1.111[\text{m/s}]$$

7. Calculation of motor velocity (N [r/min])

A single rotation of pulley : $\pi \times P_D = 0.157[\text{m}]$

$N = 1.111 / 0.157 = 7.08[\text{r/s}]$

$= 7.08 \times 60 = 424.8[\text{r/min}] < 3000[\text{r/min}]$ (Rated velocity of MSMF 750 W motor)

8. Calculation of torque

Traveling torque

$$T_f = \frac{P_D}{2\eta}(\mu g W_A + F) = \frac{0.05}{2 \times 0.8}(0.1 \times 9.8 \times 3 + 0)$$

$$= 0.061[\text{N·m}]$$

Acceleration torque

$$T_a = \frac{(J_L + J_M) \times 2\pi N[\text{r/s}]}{\text{Acceleration time}[\text{s}]} + \text{Traveling torque}$$

$$= \frac{(15.6 \times 10^{-4} + 0.87 \times 10^{-4}) \times 2\pi \times 7.08}{0.1} + 0.061$$

$$= 0.751 + 0.061 = 0.812[\text{N·m}]$$

Deceleration torque

$$T_d = \frac{(J_L + J_M) \times 2\pi N[\text{r/s}]}{\text{Deceleration time}[\text{s}]} - \text{Traveling torque}$$

$$= \frac{(15.6 \times 10^{-4} + 0.87 \times 10^{-4}) \times 2\pi \times 7.08}{0.1} - 0.061$$

$$= 0.751 - 0.061 = 0.69[\text{N·m}]$$

9. Verification of maximum torque

Acceleration torque $T_a = 0.812[\text{N·m}] < 7.1[\text{N·m}]$ (Maximum torque of MSMF 750 W motor)

10. Verification of effective torque

$$T_{rms} = \sqrt{\frac{T_a^2 \times t_a + T_f^2 \times t_b + T_d^2 \times t_d}{t_c}}$$

$$= \sqrt{\frac{0.812^2 \times 0.1 + 0.061^2 \times 0.8 + 0.69^2 \times 0.1}{2}}$$

$= 0.241[\text{N·m}] < 2.4[\text{N·m}]$ (Rated torque of MSMF 750 W motor)

11. Judging from the above calculation result, selection of MSMF 750W motor is acceptable.

Request Sheet for Motor Selection

Request for motor selection Ⅰ : Ball screw drive

1. Driven mechanism and running data

1)	Travel distance of the work load per one cycle	ℓ_1:	mm
2)	Cycle time	t_0:	s
	(Fill in items 3) and 4) if required.)		
3)	Acceleration time	t_a:	s
4)	Deceleration time	t_d:	s
5)	Stopping time	t_s:	s
6)	Max. velocity	V:	mm/s
7)	External force	F:	N
8)	Positioning accuracy of the work load	±	mm
9)	Total weight of the work load and the table	W_A:	kg
10)	Power supply voltage		V
11)	Diameter of the ball screw		mm
12)	Total length of the ball		mm
13)	Lead of the ball screw		mm
14)	Traveling direction (horizontal, vertical etc.)		

Running pattern

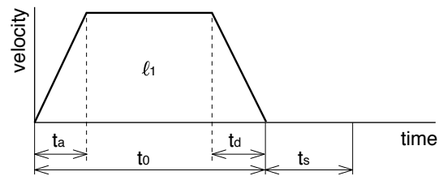

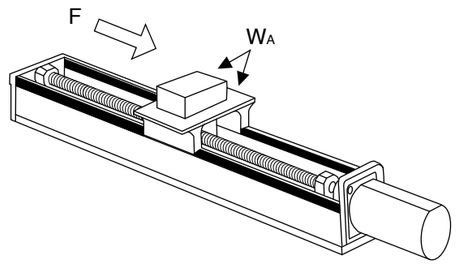

2. Other data (Fill the details on specific mechanism and its configurations in the following blank.)

Company name :

Department/Section :

Name :

Address :

Tel :

Fax :

E-mail address:

Request Sheet for Motor Selection

Request for motor selection Ⅱ : Timing pulley + Ball screw drive

1. Driven mechanism and running data

					Motor side	Ball screw side
1)	Travel distance of the work load per one cycle	ℓ_1: mm	15)	Diameter of the pulley	D_1: mm	D_2: mm
2)	Cycle time	t_0: s	16)	Weight of the pulley	W_1: kg	W_2: kg
	(Fill in items 3) and 4) if required.)			(or item 17) and 18))		
3)	Acceleration time	t_a: s	17)	Width of the pulley	L_1: mm	
4)	Deceleration time	t_d: s	18)	Material of the pulley		
5)	Stopping time	t_s: s	19)	Weight of the belt	W_M: kg	
6)	Max. velocity	V: mm/s				
7)	External force	F: N				
8)	Positioning accuracy of the work load	± mm				
9)	Total weight of the work load and the table	W_A: kg				
10)	Power supply voltage	V				
11)	Diameter of the ball screw	mm				
12)	Total length of the ball screw	mm				
13)	Lead of the ball screw	mm				
14)	Traveling direction (horizontal, vertical etc.)					

Running pattern

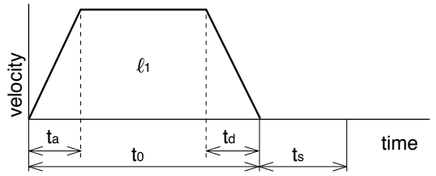

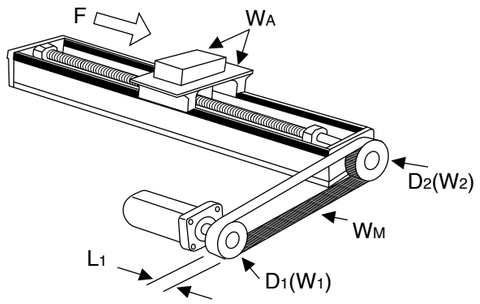

2. Other data (Fill the details on specific mechanism and its configurations in the following blank.)

Company name :

Department/Section :

Name :

Address :

Tel :

Fax :

E-mail address:

Request Sheet for Motor Selection

Request for motor selection Ⅲ : Belt drive

1. Driven mechanism and running data

1)	Travel distance of the work load per one cycle	ℓ_1: mm			
2)	Cycle time	t_0: s			
	(Fill in items 3) and 4) if required.)				
3)	Acceleration time	t_a: s			
4)	Deceleration time	t_d: s			
5)	Stopping time	t_s: s			
6)	Max. velocity	V: mm/s			
7)	External force	F: N			
8)	Positioning accuracy of the work load	± mm			
9)	Total weight of the work load	W_A: kg			
10)	Power supply voltage	V			
11)	Weight of the belt	W_M: kg			
12)	Diameter of the driving pulley	D_1: mm			
13)	Total weight of the pulley	W_1: kg			
				(or item 14) and 15))	
			14)	Width of the pulley	L_1: mm
			15)	Material of the pulley	
			16)	Traveling direction (horizontal, vertical etc.)	

Running pattern

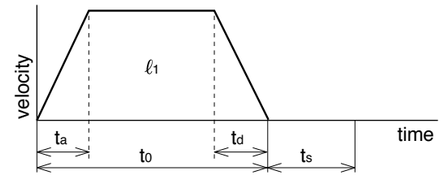

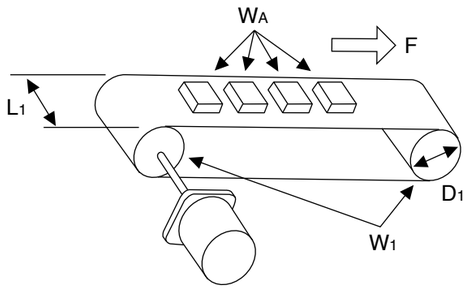

2. Other data (Fill the details on specific mechanism and its configurations in the following blank.)

Company name :

Department/Section :

Name :

Address :

Tel :

Fax :

E-mail address:

Request Sheet for Motor Selection

Request for motor selection Ⅳ : Timing pulley + Belt drive

1. Driven mechanism and running data

1)	Travel distance of the work load per one cycle	ℓ_1: mm
2)	Cycle time	t_0: s
	(Fill in items 3) and 4) if required.)	
3)	Acceleration time	t_a: s
4)	Deceleration time	t_d: s
5)	Stopping time	t_s: s
6)	Max. velocity	V: mm/s
7)	External force	F: N
8)	Positioning accuracy of the work load	± mm
9)	Total weight of the work load	W_A: kg
10)	Power supply voltage	V
11)	Weight of motor side belt	W_M: kg

		Motor side	Belt side
12)	Diameter of the pulley	D_1: mm	D_2: mm
13)	Weight of the pulley	W_1: kg	W_2: kg
	(or item 14) and 15))		
14)	Width of the belt	L_1: mm	
15)	Material of the pulley		

		Motor side	Belt side
16)	Diameter of the pulley	D_3: mm	D_4: mm
17)	Weight of the pulley	W_3: kg	W_4: kg
	(or item 18) and 19))		
18)	Width of the pulley	L_2: mm	
19)	Material of the pulley		
20)	Weight of the belt	W_L: kg	
21)	Traveling direction (horizontal, vertical etc.)		

Running pattern

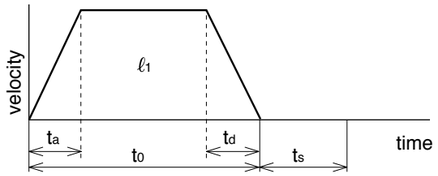

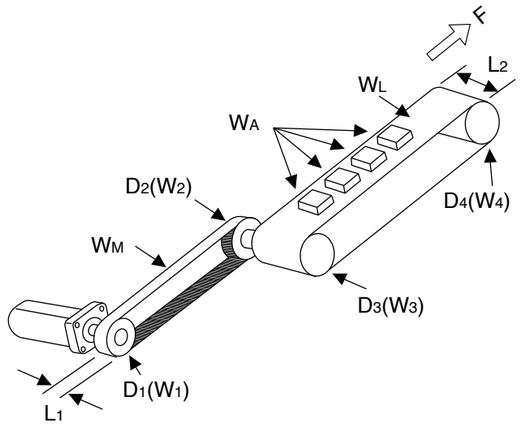

2. Other data (Fill the details on specific mechanism and its configurations in the following blank.)

Company name :

Department/Section :

Name :

Address :

Tel :

Fax :

E-mail address:

Request Sheet for Motor Selection

Request for motor selection Ⅴ : Turntable drive

1. Driven mechanism and running data

1)	Travel distance of the work load per one cycle	d_1: deg
2)	Cycle time	t_0: s
	(Fill in items 3) and 4) if required.)	
3)	Acceleration time	t_a: s
4)	Deceleration time	t_d: s
5)	Stopping time	t_s: s
6)	Max. rotational speed of the table	v: deg/s
	(or)	V: r/s
7)	Positioning accuracy of the work load	± deg
8)	Weight of one work load	W_A: kg
9)	Driving radius of the center of gravity of the work	R_1: mm
10)	Diameter of the table	D_1: mm
11)	Mass of the table	W_1: kg
12)	Diameter of the table support	T_1: mm
13)	Power supply voltage	V

		Prism	Cylinder
14)	Dimensions of the work load	a: mm	a: mm
		b: mm	b: mm
		c: mm	c: mm
15)	Number of work loads	pcs	

Running pattern

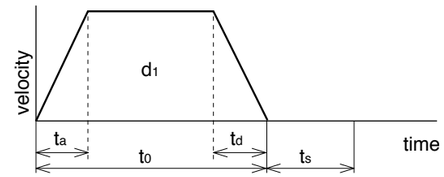

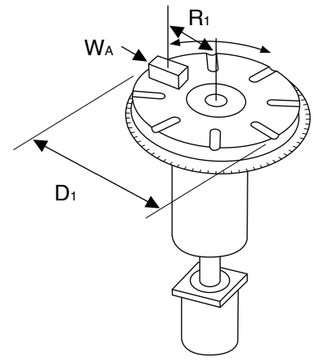

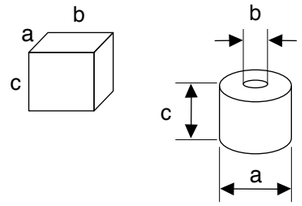

2. Other data (Fill the details on specific mechanism and its configurations in the following blank.)

Company name :

Department/Section :

Name :

Address :

Tel :

Fax :

E-mail address:

Request Sheet for Motor Selection

Request for motor selection Ⅵ : Timing pulley + Turntable drive

1. Driven mechanism and running data

1)	Travel distance of the work load per one cycle	d_1:	deg
2)	Cycle time	t_0:	s
	(Fill in items 3) and 4) if required.)		
3)	Acceleration time	t_a:	s
4)	Deceleration time	t_d:	s
5)	Stopping time	t_s:	s
6)	Max. rotational speed of the table	v:	deg/s
	(or)	V:	r/s
7)	Positioning accuracy of the work load	±	deg
8)	Weight of one work load	W_A:	kg
9)	Driving radius of the center of gravity of the work	R_1:	mm
10)	Diameter of the table	D_1:	mm
11)	Mass of the table	W_1:	kg
12)	Diameter of the table support	T_1:	mm
13)	Power supply voltage		V

		(Prism)	(Cylinder)
14)	Dimension of the work load	a: mm	a: mm
		b: mm	b: mm
		c: mm	c: mm
15)	Number of work loads		pcs

		Motor side	Turntable side
16)	Diameter of the pulley	D_2: mm	D_3: mm
17)	Weight of the pulley	W_2: kg	W_3: kg
	(or item 18) and 19))		
18)	Width of the pulley	L_1:	mm
19)	Material of the pulley		
20)	Weight of the belt	W_M:	kg

Running pattern

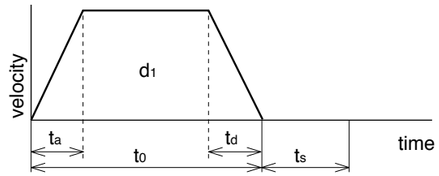

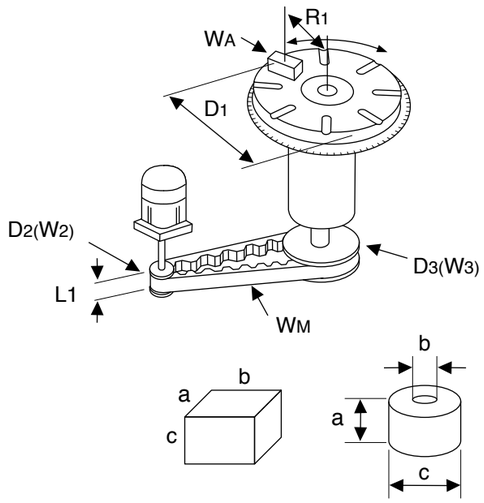

2. Other data (Fill the details on specific mechanism and its configurations in the following blank.)

Company name :
Department/Section :
Name :
Address :
Tel :
Fax :
E-mail address:

Request Sheet for Motor Selection

Request for motor selection Ⅶ : Roller feed drive

1. Driven mechanism and running data

1)	Travel distance of the work load per one cycle	ℓ_1:	mm
2)	Cycle time	t_0:	s
	(Fill in items 3) and 4) if required.)		
3)	Acceleration time	t_a:	s
4)	Deceleration time	t_d:	s
5)	Stopping time	t_s:	s
6)	Max. velocity	v:	mm/s
7)	External pulling force	F:	N
8)	Positioning accuracy of the work load	±	mm
9)	Number of rollers		pcs
10)	Power supply voltage		V
11)	Diameter of the roller	D_1:	mm
12)	Mass of the roller	W_1:	kg

Running pattern

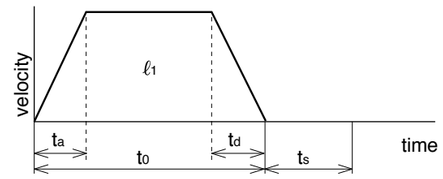

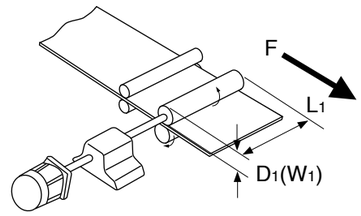

(or item 13) and 14))

13)	Width of the roller	L_1:	mm
14)	Material of the roller		

2. Other data (Fill the details on specific mechanism and its configurations in the following blank.)

Company name :
Department/Section :
Name :
Address :
Tel :
Fax :
E-mail address:

Request Sheet for Motor Selection

Request for motor selection Ⅷ : Driving with Rack & Pinion

1. Driven mechanism and running data

1)	Travel distance of the work load per one cycle	ℓ_1:	mm
2)	Cycle time	to:	s
	(Fill in items 3) and 4) if required.)		
3)	Acceleration time	ta:	s
4)	Deceleration time	td:	s
5)	Stopping time	ts:	s
6)	Max. velocity	V:	mm/s
7)	External force	F:	N
8)	Positioning accuracy of the work load	±	mm
9)	Total weight of the work load	W_A:	kg
10)	Power supply voltage		V
11)	Diameter of the pinion	D_3:	mm
12)	Mass of the pinion	W_3:	kg
13)	Traveling direction (horizontal, vertical, etc.)		

Running pattern

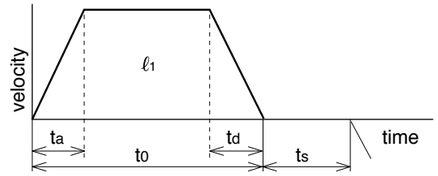

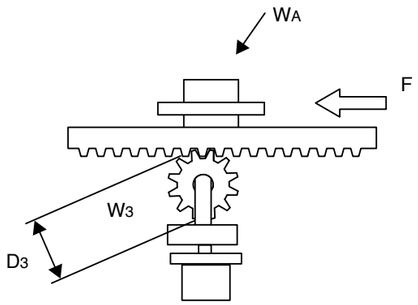

2. Other data (Fill the details on specific mechanism and its configurations in the following blank.)

Company name :

Department/Section :

Name :

Address :

Tel :

Fax :

E-mail address:

Connection Between Driver and Controller

FP7-AFP7PP02T/L(2-axes) AFP7PP04T/L(4-axes) Connection with the Panasonic devices SUNX.

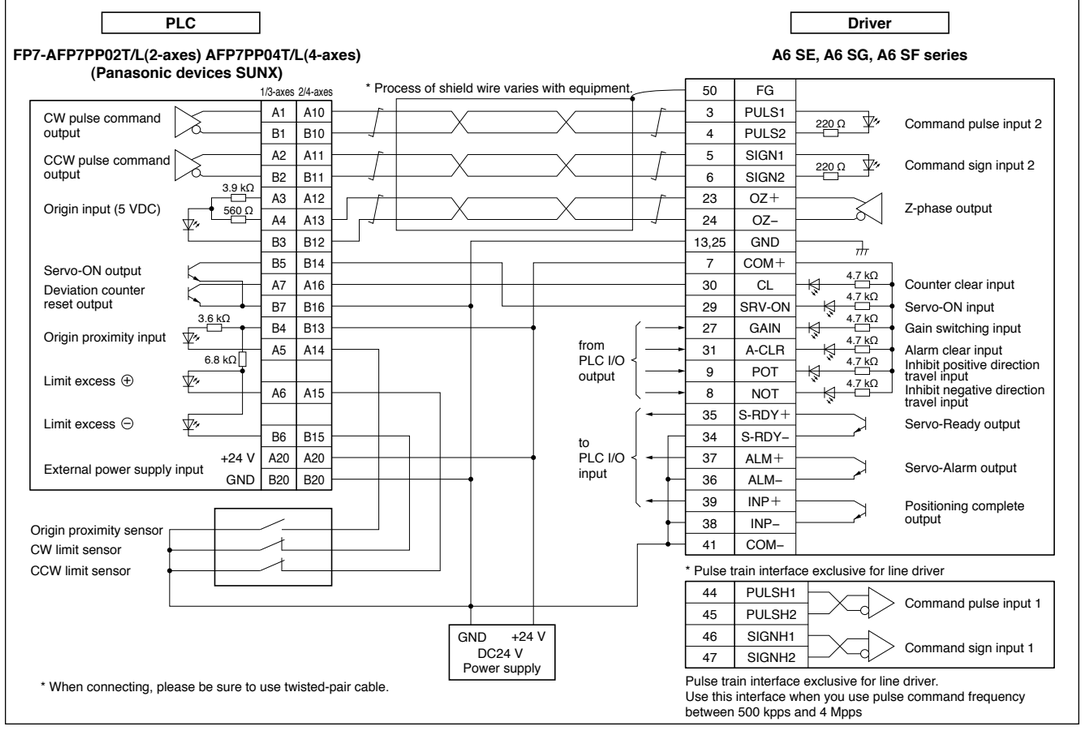

FPG-PP12 AFPG432 Connection with the Panasonic devices SUNX.

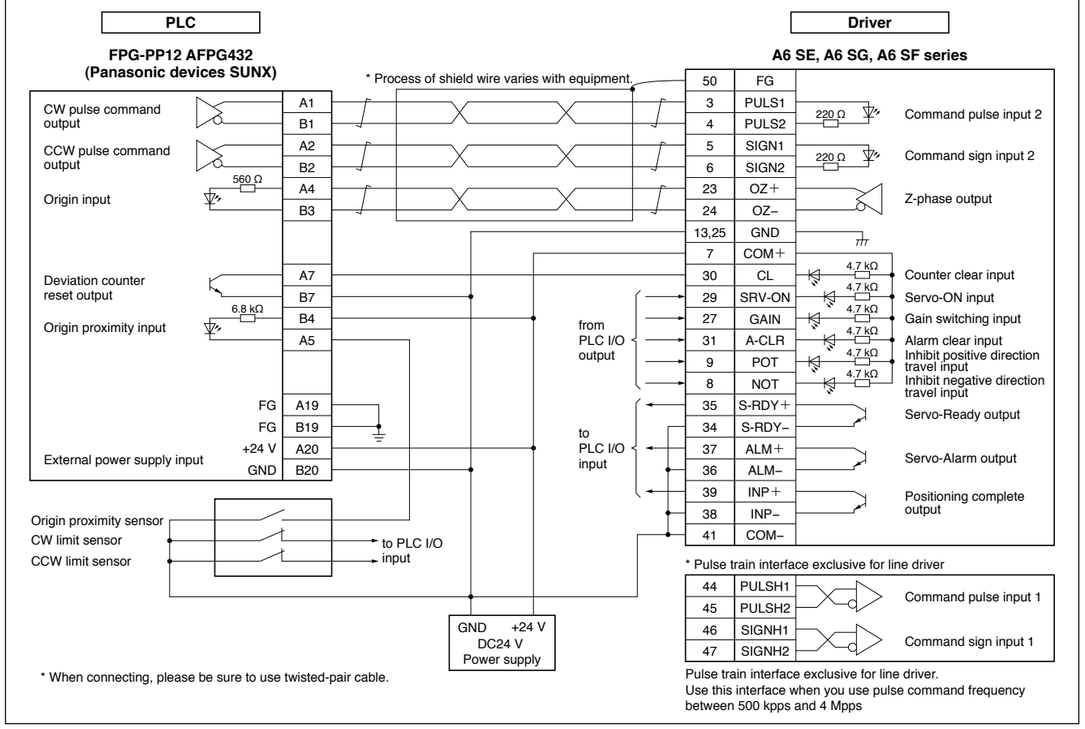

Connection Between Driver and Controller

FP2-PP2 AFP2430 Connection with the Panasonic devices SUNX.

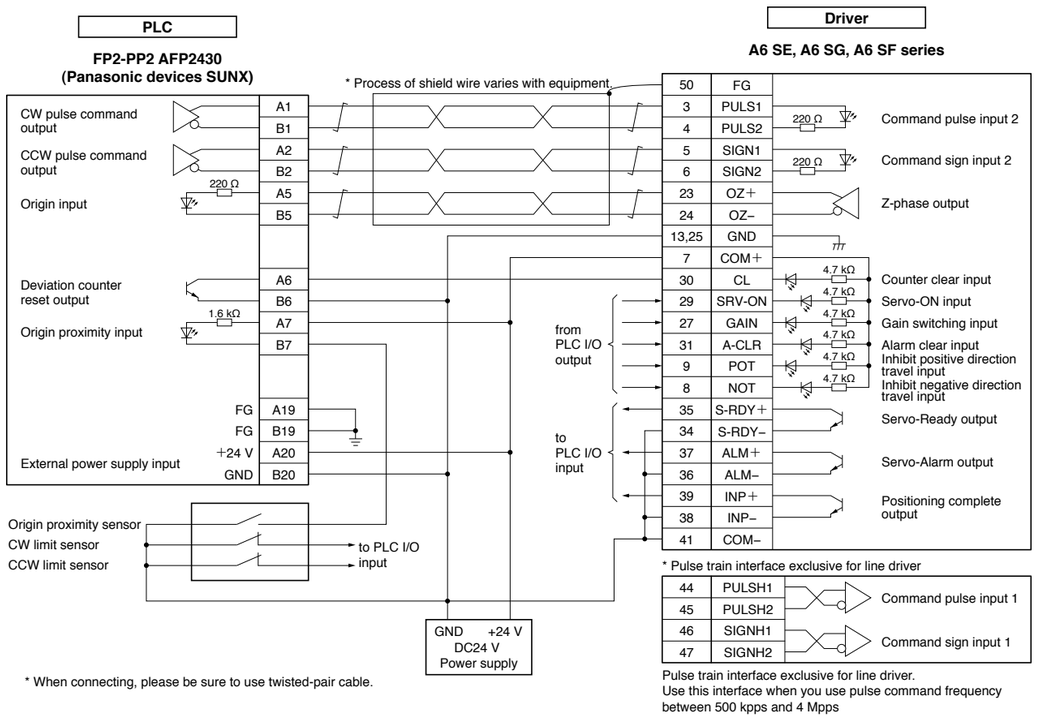

F3YP22-0P/F3YP24-0P/F3YP28-0P Connection with the Yokogawa Electric Corp.

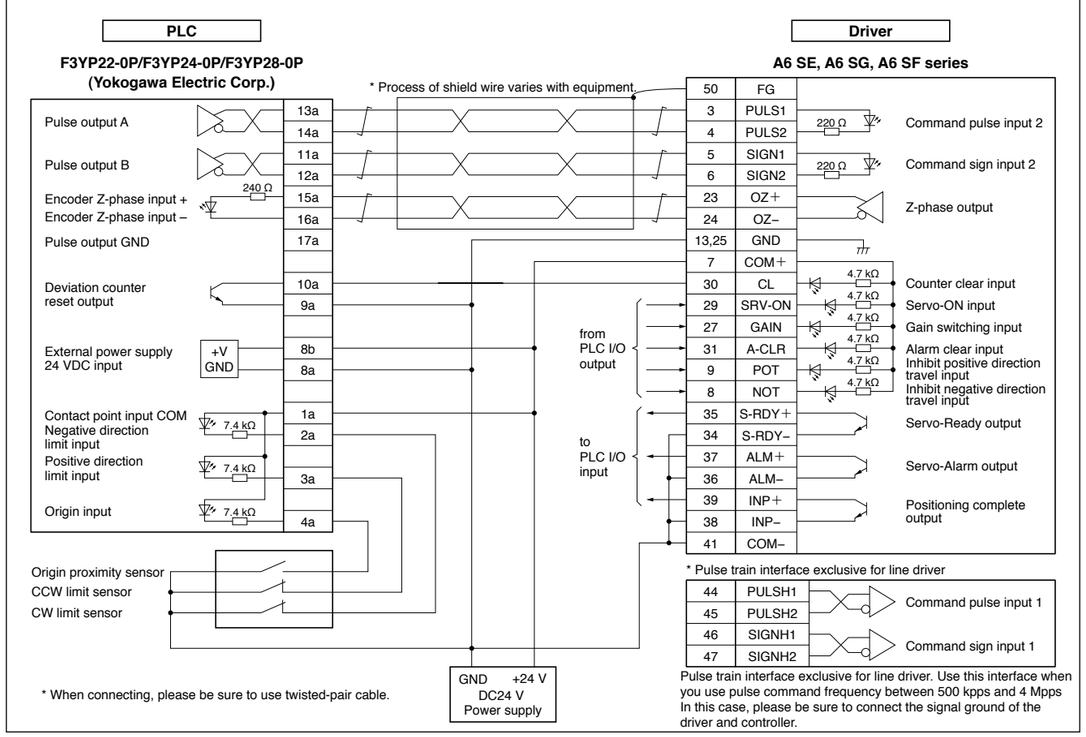

FPG-C32T Connection with the Panasonic devices SUNX.

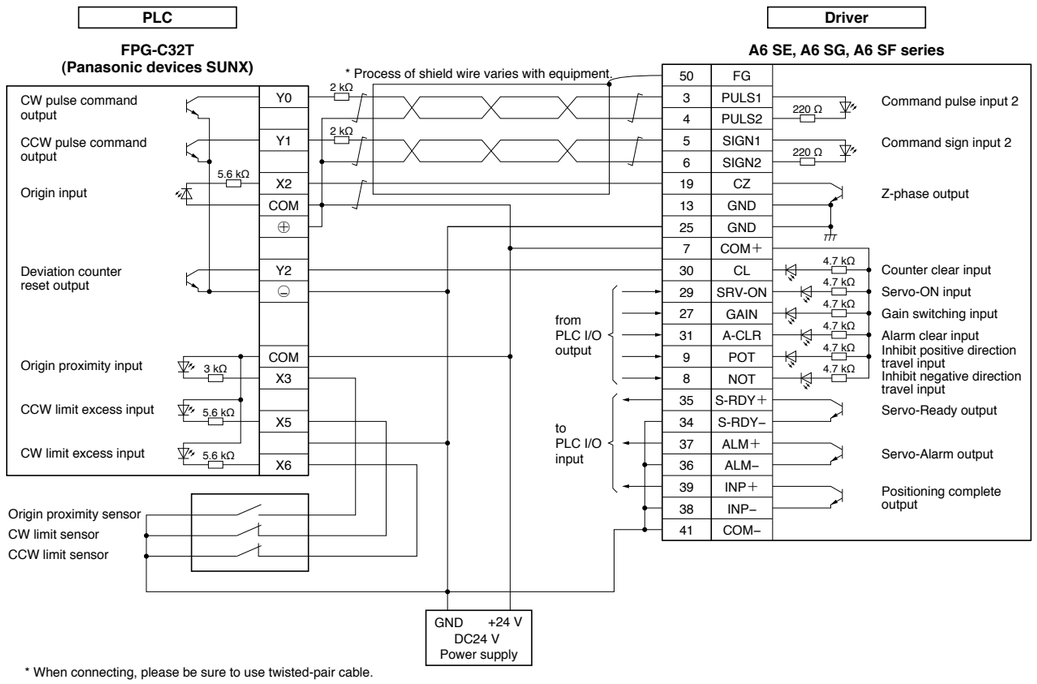

F3NC32-ON/F3NC34-ON Connection with the Yokogawa Electric Corp.

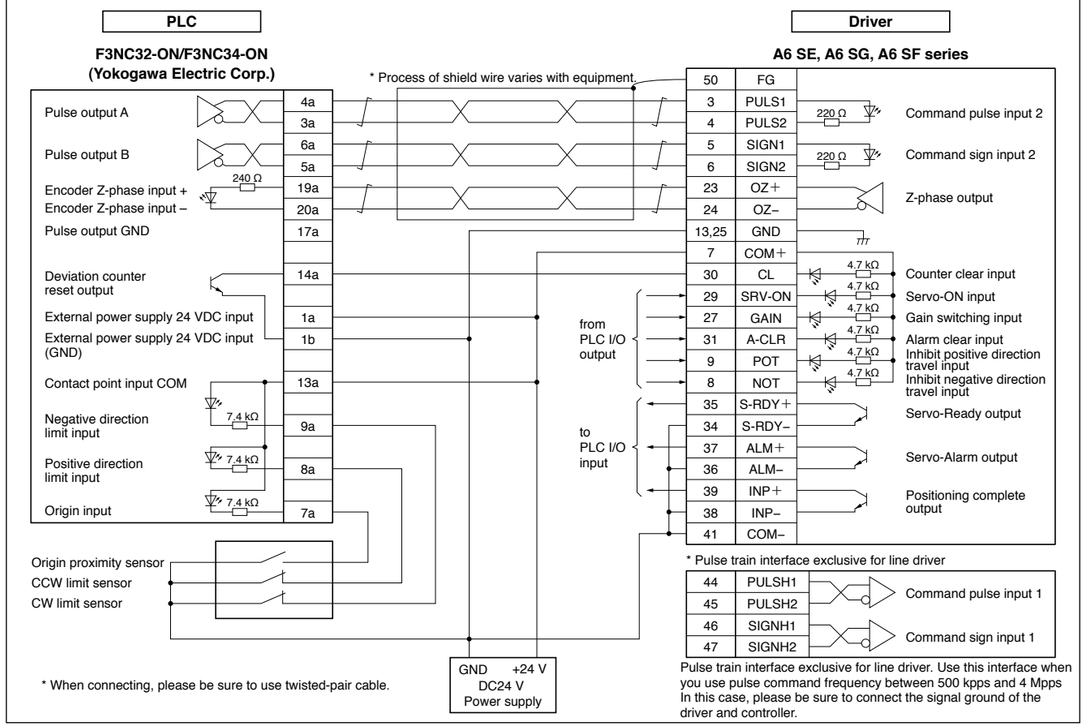

Connection Between Driver and Controller

CJ1W-NC113 Connection with the Omron Corp.

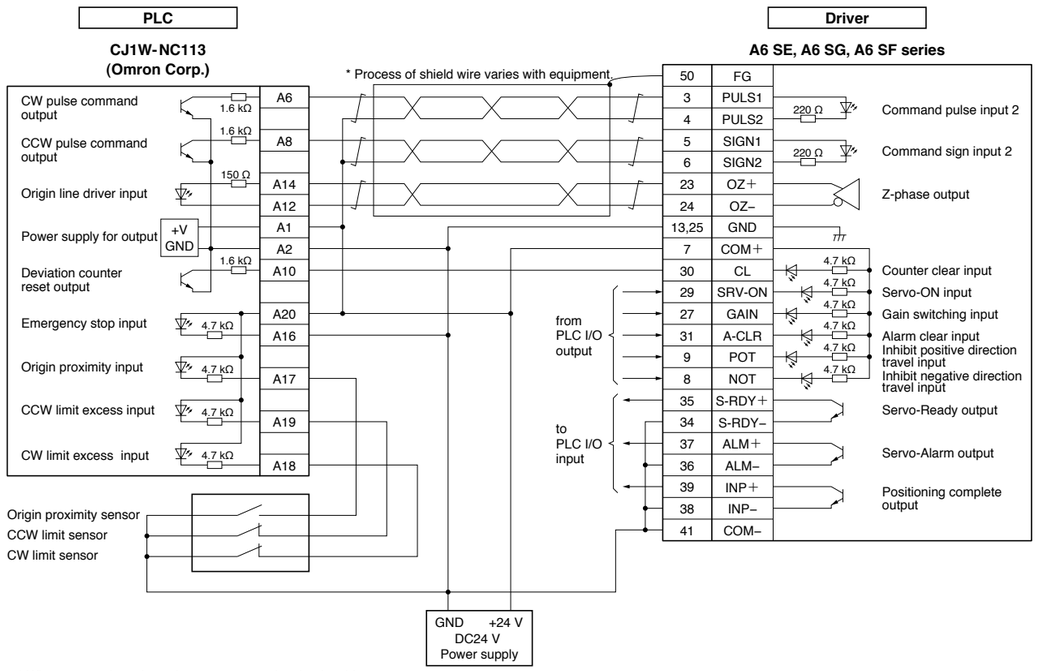

QD75D1 Connection with the Mitsubishi Electric Corp.

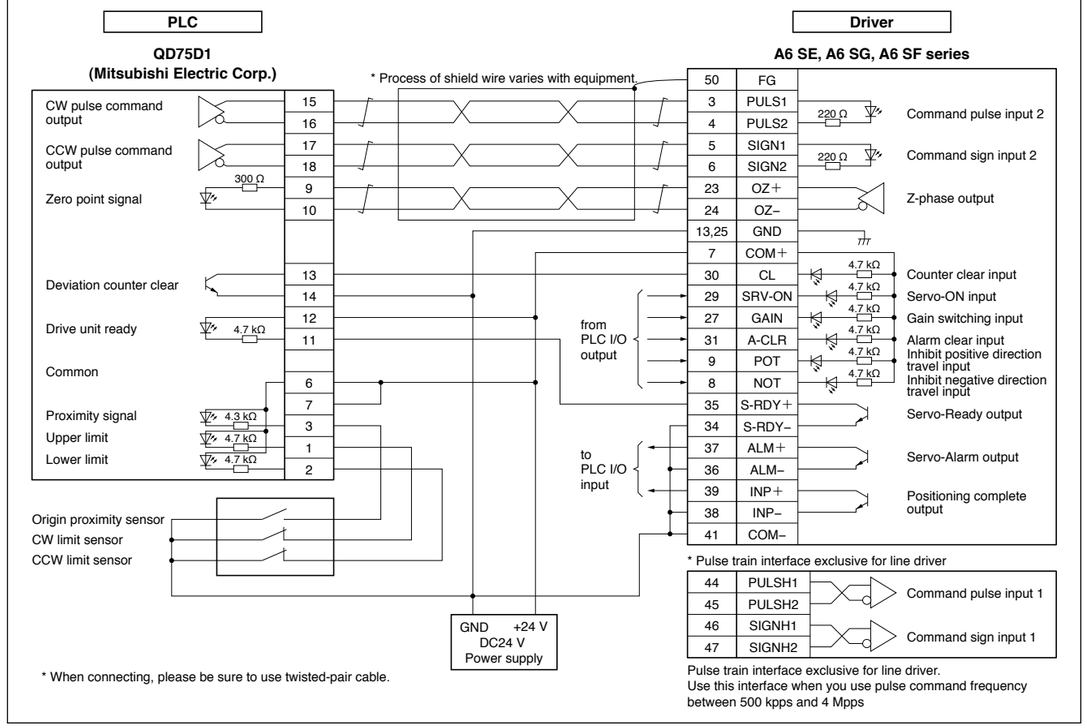

CJ1W-NC133 Connection with the Omron Corp.

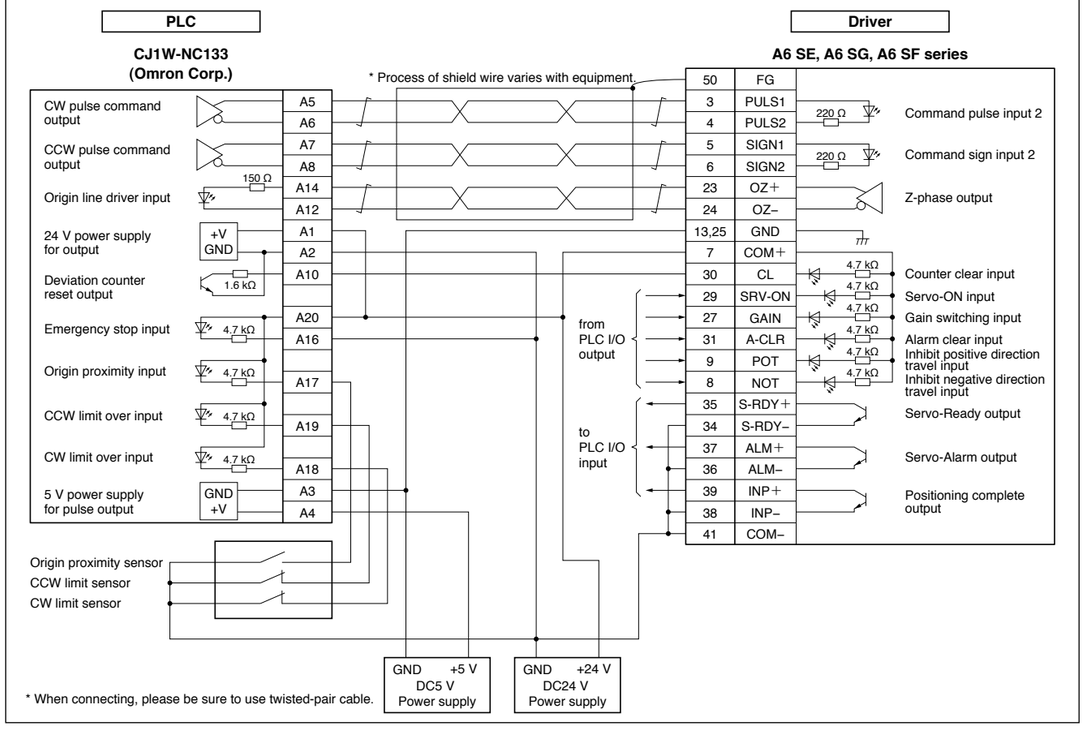

KV-5000/3000 Connection with the KEYENCE Corp.

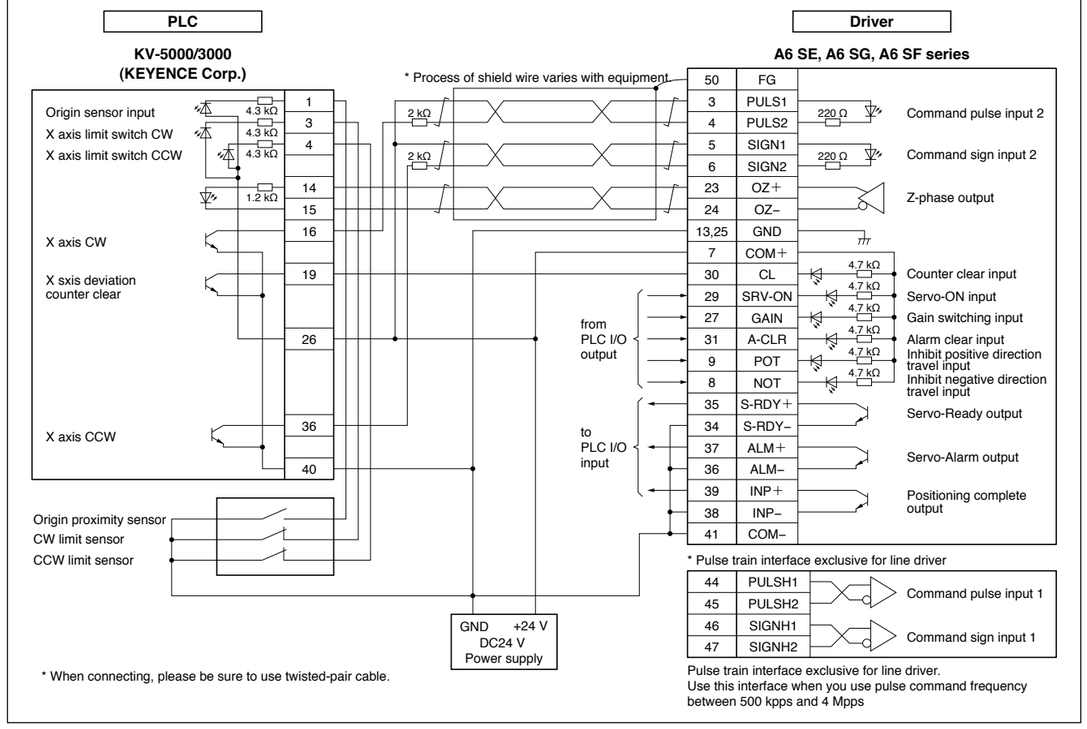

Replacing Old Model Servo Driver with MINAS A6 series

For easier replacement of old driver (MINAS X/XX/V series) with A6 series, use the interface conversion connector.

〈36-pin → 50-pin〉

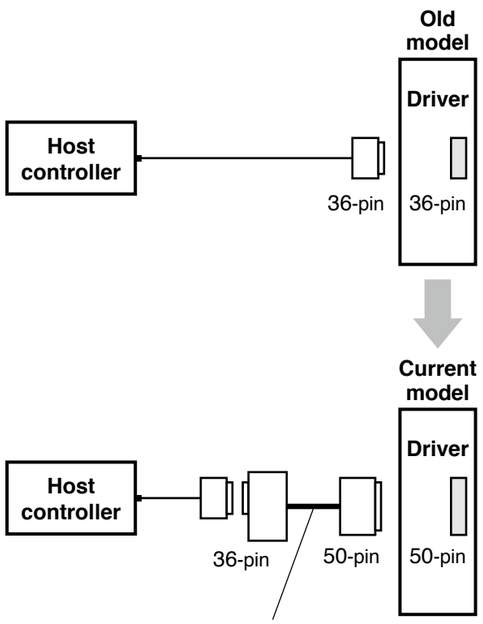

36-pin → 50-pin Conversion cable

DV0P4120
DV0P4121

〈50-pin → 50-pin〉

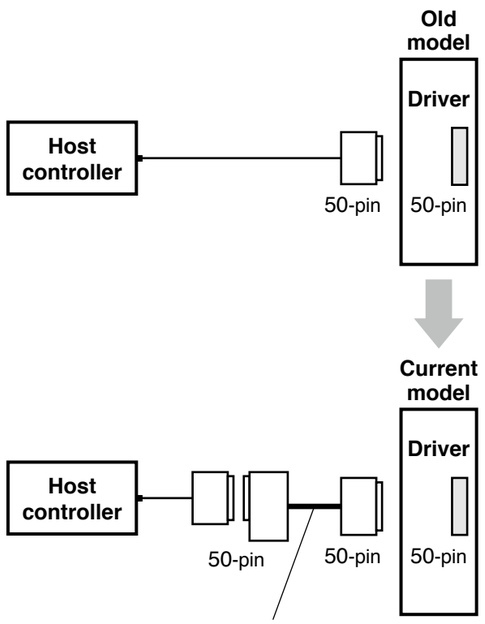

50-pin → 50-pin Conversion cable

DV0P4130
DV0P4131
DV0P4132

When selecting the cable, refer to the table below because the part number of the cable is specific to the control mode of the old model.

Old model	Control mode	Conversion cable part No.	Conversion wiring table
X series XX series (36-pin)	Position/velocity control	DV0P4120	P.264
	Torque control	DV0P4121	
V series (50-pin)	Position control	DV0P4130	P.265
	Velocity control	DV0P4131	
	Torque control	DV0P4132	P.266

* For external dimensions, refer to P.182.

Conversion Wiring Table

Pin No. on Old Model	DV0P4120			DV0P4121		
	Pin No. on Current Model	Signal Name	Symbol	Pin No. on Current Model	Signal Name	Symbol
1	23	Z-phase output	OZ+	23	Z-phase output	OZ+
2	24	Z-phase output	OZ–	24	Z-phase output	OZ–
3	13	Signal ground	GND	13	Signal ground	GND
4	19	Z-phase output	CZ	19	Z-phase output	CZ
5	4	Command pulse input 2	PULS2	4	Command pulse input 2	PULS2
6	3	Command pulse input 2	PULS1	3	Command pulse input 2	PULS1
7	6	Command pulse sign input 2	SIGN2	6	Command pulse sign input 2	SIGN2
8	5	Command pulse sign input 2	SIGN1	5	Command pulse sign input 2	SIGN1
9	33	Command pulse inhibition input	INH	33	Command pulse inhibition input	INH
10	26	Speed zero clamp input	ZEROSPD	26	Speed zero clamp input	ZEROSPD
11	7	Power supply for control signal (+)	COM+	7	Power supply for control signal (+)	COM+
12	29	Servo-ON input	SRV-ON	29	Servo-ON input	SRV-ON
13	30	Deviation counter clear input	CL	30	Deviation counter clear input	CL
14	14	Speed command input	SPR	NC		
15	15	Signal ground	GND	15	Signal ground	GND
16	43	Speed monitor output	SP	43	Speed monitor output	SP
17	25	Signal ground	GND	25	Signal ground	GND
18	50	Frame ground	FG	50	Frame ground	FG
19	21	A-phase output	OA+	21	A-phase output	OA+
20	22	A-phase output	OA-	22	A-phase output	OA-
21	48	B-phase output	OB+	48	B-phase output	OB+
22	49	B-phase output	OB–	49	B-phase output	OB–
23	NC			NC		
24	NC			NC		
25	39	Positioning complete output Speed arrival output	COIN+ AT-SPEED+	39	Positioning complete output Speed arrival output	COIN+ AT-SPEED+
26	37	Servo-Alarm output	ALM+	37	Servo-Alarm output	ALM+
27	35	Servo-Ready output	S-RDY+	35	Servo-Ready output	S-RDY+
28	34	Positioning complete output (–) Speed arrival output (–)	COIN– AT-SPEED–	34	Positioning complete output (–) Speed arrival output (–)	COIN– AT-SPEED–
	36	Servo-Alarm output (–)	ALM–	36	Servo-Alarm output (–)	ALM–
	38	Servo-Ready output (–)	S-RDY–	38	Servo-Ready output (–)	S-RDY–
	41	Power supply for control signal (–)	COM–	41	Power supply for control signal (–)	COM–
29	8	CW over-travel inhibit input	CWL	8	CW over-travel inhibit input	CWL
30	9	CCW over-travel inhibit input	CCWL	9	CCW over-travel inhibit input	CCWL
31	31	Alarm clear input	A-CLR	31	Alarm clear input	A-CLR
32	32	Control mode switching input	C-MODE	32	Control mode switching input	C-MODE
33	18	CW direction torque limit input	CWTL	18	CW direction torque limit input	CWTL
34	16	CCW direction torque limit input	CCWTL	14	Torque command input	TRQR
35	17	Signal ground	GND	17	Signal ground	GND
36	42	Torque monitor output	IM	42	Torque monitor output	IM

* “NC” is no connect.

Replacing Old Model Servo Driver with MINAS A6 series

Pin No. on Old Model	DV0P4130			DV0P4131		
	Pin No. on Current Model	Signal Name	Symbol	Pin No. on Current Model	Signal Name	Symbol
1	8	CW over-travel inhibit input	CWL	8	CW over-travel inhibit input	CWL
2	9	CCW over-travel inhibit input	CCWL	9	CCW over-travel inhibit input	CCWL
3	3	Command pulse input 2	PULS1	NC		
4	4	Command pulse input 2	PULS2	NC		
5	5	Command pulse sign input 2	SIGN1	NC		
6	6	Command pulse sign input 2	SIGN2	NC		
7	7	Power supply for control signal (+)	COM+	7	Power supply for control signal (+)	COM+
8	NC			NC		
9	NC			NC		
10	NC			NC		
11	11	External brake release signal	BRK-OFF+	11	External brake release signal	BRK-OFF+
12	12	Zero-speed detection output signal	ZSP	12	Zero-speed detection output signal	ZSP
13	13	Torque in-limit signal output	TLC	13	Torque in-limit signal output	TLC
14	NC			14	Speed command input	SPR
15	15	Signal ground	GND	15	Signal ground	GND
16	16	CCW direction torque limit input	CCWTL	16	CCW direction torque limit input	CCWTL
17	17	Signal ground	GND	17	Signal ground	GND
18	18	CW direction torque limit input	CWTL	18	CW direction torque limit input	CWTL
19	19	Z-phase output	CZ	19	Z-phase output	CZ
20	NC			NC		
21	21	A-phase output	OA+	21	A-phase output	OA+
22	22	A-phase output	OA-	22	A-phase output	OA-
23	23	Z-phase output	OZ+	23	Z-phase output	OZ+
24	24	Z-phase output	OZ-	24	Z-phase output	OZ-
25	50	Frame ground	FG	50	Frame ground	FG
26	26	Speed zero clamp input	ZEROSPD	26	Speed zero clamp input	ZEROSPD
27	27	Gain switching input	GAIN	27	Gain switching input	GAIN
28	NC			33	Selection 1 input of internal command speed	INTSPD1
29	29	Servo-ON input	SRV-ON	29	Servo-ON input	SRV-ON
30	30	Deviation counter clear input	CL	NC		
31	31	Alarm clear input	A-CLR	31	Alarm clear input	A-CLR
32	32	Control mode switching input	C-MODE	32	Control mode switching input	C-MODE
33	33	Command pulse inhibition input	INH	NC		
34	NC			NC		
35	35	Servo-Ready output	S-RDY+	35	Servo-Ready output	S-RDY+
36	NC			NC		
37	37	Servo-Alarm output	ALM+	37	Servo-Alarm output	ALM+
38	NC			NC		
39	39	Positioning complete output	COIN+	39	Speed arrival output	AT-SPEED+
40	40	Torque in-limit signal output	TLC	40	Torque in-limit signal output	TLC
41	10	External brake release signal (–)	BRK-OFF–	10	External brake release signal (–)	BRK-OFF–
	34	Positioning complete output (–)	COIN–	34	Speed arrival output (–)	AT-SPEED–
	36	Servo-Alarm output (–)	ALM–	36	Servo-Alarm output (–)	ALM–
	38	Servo-Ready output (–)	S-RDY–	38	Servo-Ready output (–)	S-RDY–
	41	Power supply for control signal (–)	COM–	41	Power supply for control signal (–)	COM–
42	42	Torque monitor output	IM	42	Torque monitor output	IM
43	43	Speed monitor output	SP	43	Speed monitor output	SP
44	25	Signal ground	GND	25	Signal ground	GND
45	25	Signal ground	GND	25	Signal ground	GND
46	25	Signal ground	GND	25	Signal ground	GND
47	NC			NC		
48	48	B-phase output	OB+	48	B-phase output	OB+
49	49	B-phase output	OB–	49	B-phase output	OB–
50	50	Frame ground	FG	50	Frame ground	FG

* “NC” is no connect.

Pin No. on Old Model	DV0P4132		
	Pin No. on Current Model	Signal Name	Symbol
1	8	CW over-travel inhibit input	CWL
2	9	CCW over-travel inhibit input	CCWL
3	NC		
4	NC		
5	NC		
6	NC		
7	7	Power supply for control signal (+)	COM+
8	NC		
9	NC		
10	NC		
11	11	External brake release signal	BRK-OFF+
12	12	Zero-speed detection output signal	ZSP
13	13	Torque in-limit signal output	TLC
14	NC		
15	15	Signal ground	GND
16	16	Torque command input	TRQR
17	17	Signal ground	GND
18	18	CW direction torque limit input	CWTL
19	19	Z-phase output	CZ
20	NC		
21	21	A-phase output	OA+
22	22	A-phase output	OA-
23	23	Z-phase output	OZ+
24	24	Z-phase output	OZ-
25	50	Frame ground	FG
26	26	Speed zero clamp input	ZEROSPD
27	27	Gain switching input	GAIN
28	NC		
29	29	Servo-ON input	SRV-ON
30	NC		
31	31	Alarm clear input	A-CLR
32	32	Control mode switching input	C-MODE
33	NC		
34	NC		
35	35	Servo-Ready output	S-RDY+
36	NC		
37	37	Servo-Alarm output	ALM+
38	NC		
39	39	Speed arrival output	AT-SPEED+
40	40	Torque in-limit signal output	TLC
41	10	External brake release signal (–)	BRK-OFF–
	34	Speed arrival output (–)	AT-SPEED–
	36	Servo-Alarm output (–)	ALM–
	38	Servo-Ready output (–)	S-RDY–
	41	Power supply for control signal (–)	COM–
42	42	Torque monitor output	IM
43	43	Speed monitor output	SP
44	25	Signal ground	GND
45	25	Signal ground	GND
46	25	Signal ground	GND
47	NC		
48	48	B-phase output	OB+
49	49	B-phase output	OB–
50	50	Frame ground	FG

* “NC” is no connect.

Connection Between Driver and Controller

FP7-AFP7PP02T/L(2-axes) AFP7PP04T/L(4-axes) Connection with the Panasonic devices SUNX.

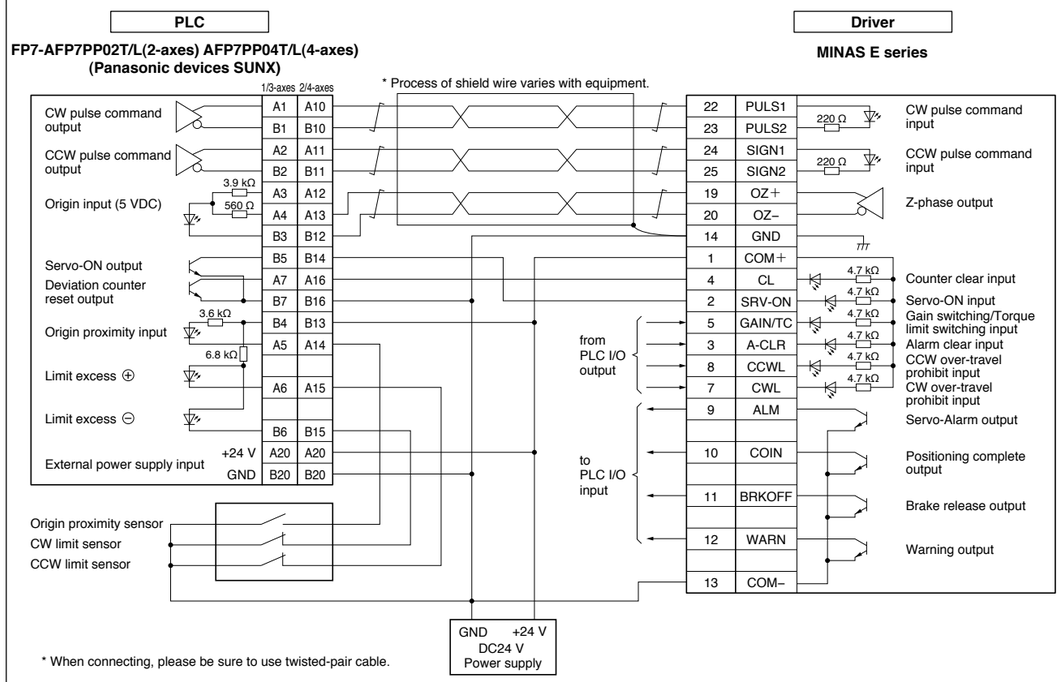

FP2-PP2 AFP2430 Connection with the Panasonic devices SUNX.

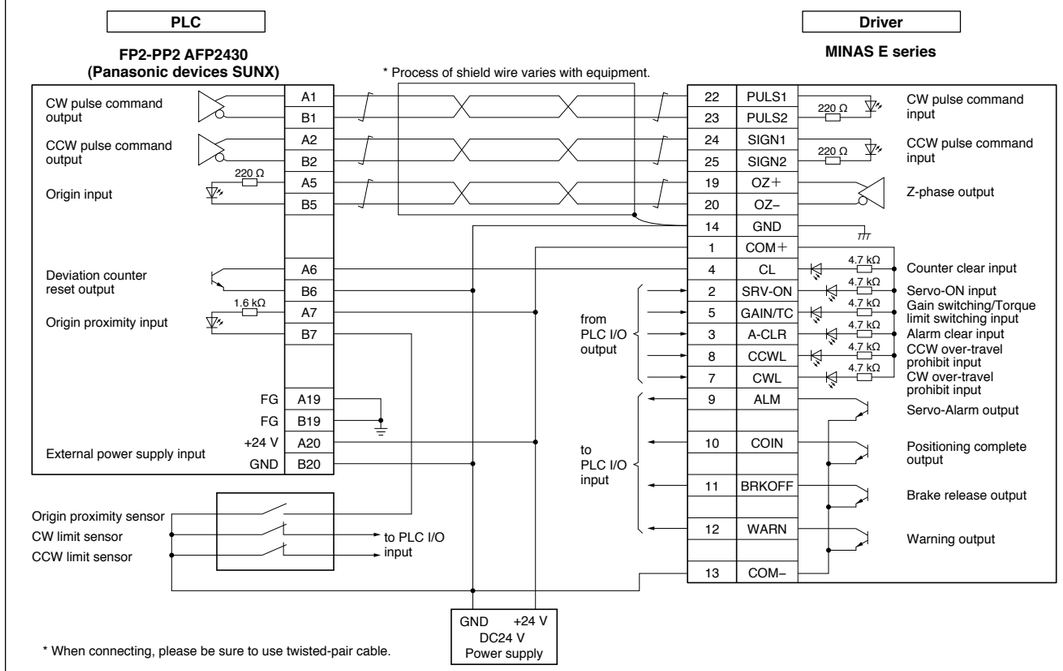

FPG-PP12 AFPG432 Connection with the Panasonic devices SUNX.

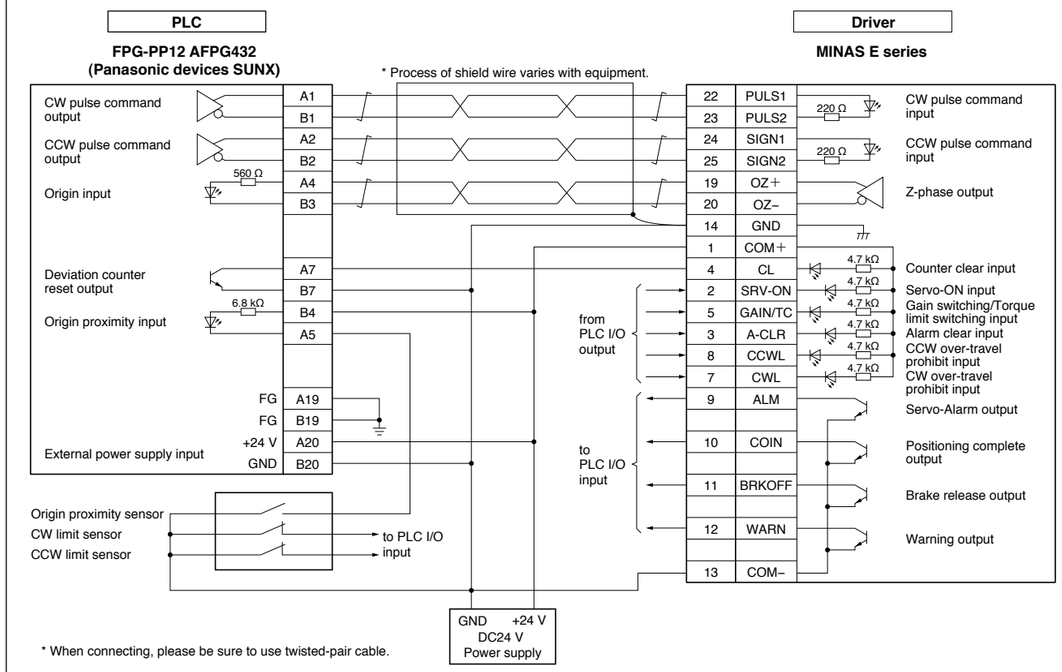

FPG-C32T Connection with the Panasonic devices SUNX.

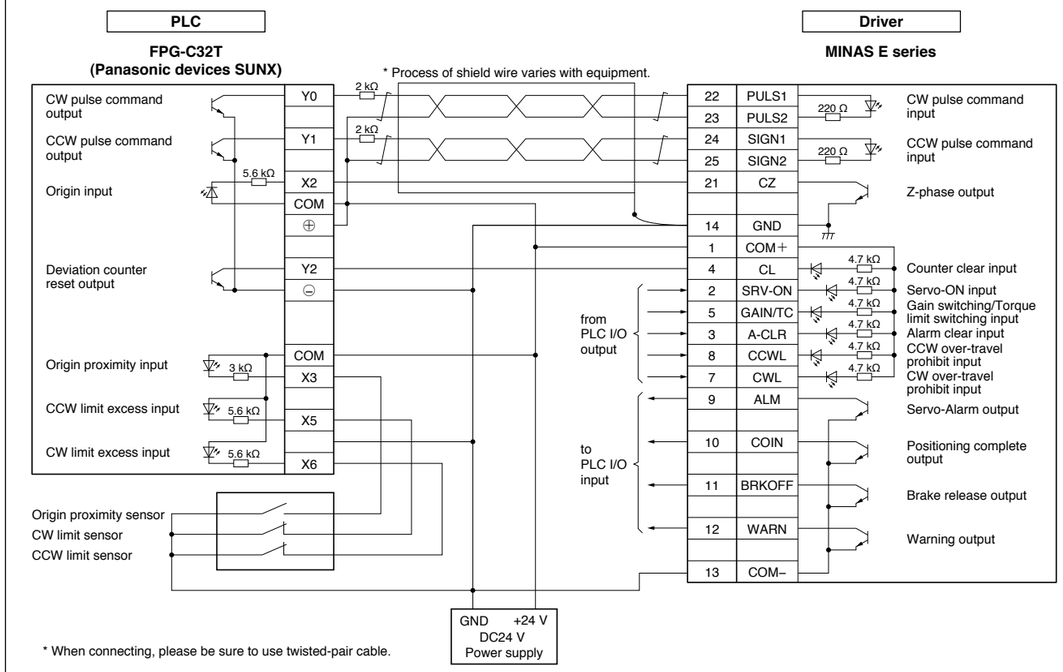

Connection Between Driver and Controller

F3YP22-0P/F3YP24-0P/F3YP28-0P Connection with the Yokogawa Electric Corp.

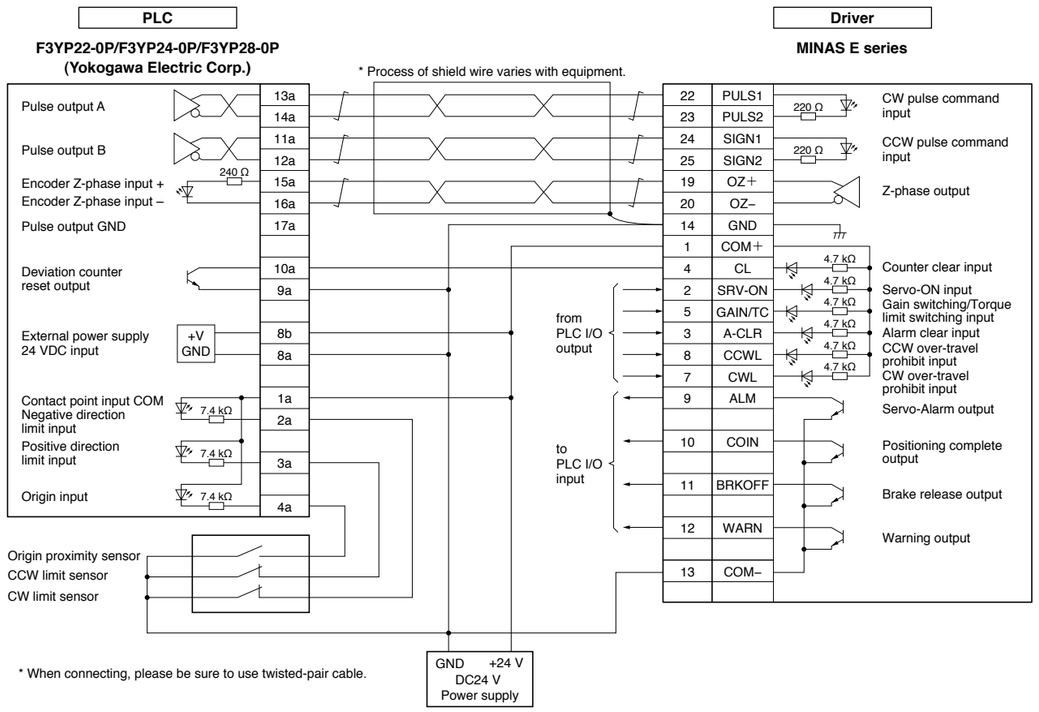

* When connecting, please be sure to use twisted-pair cable.

CJ1W-NC113 Connection with the Omron Corp.

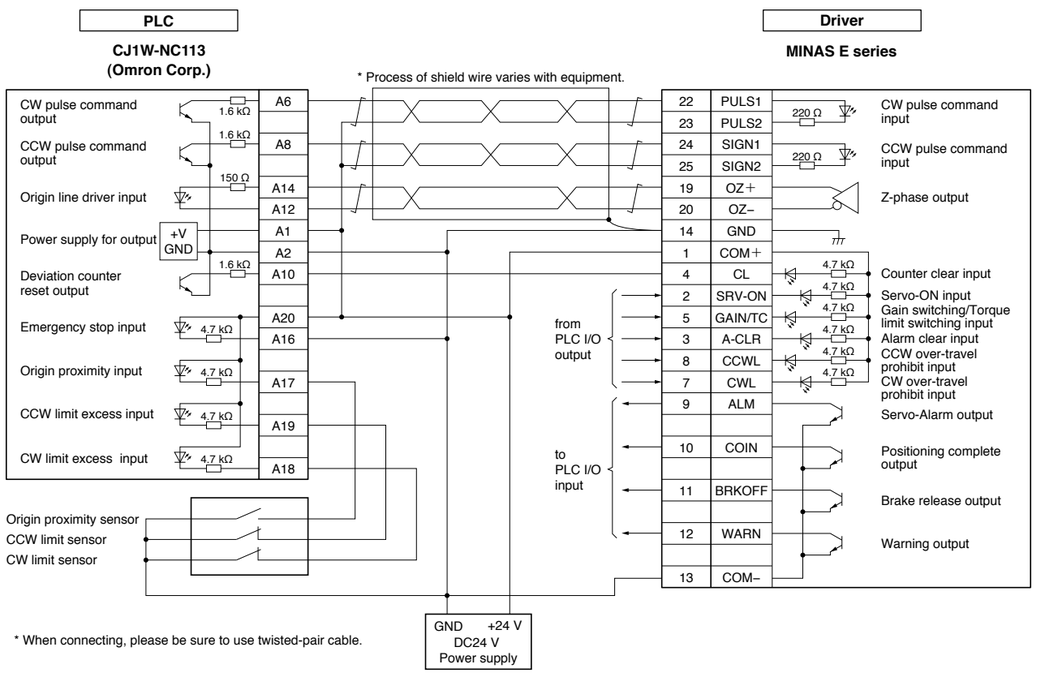

* When connecting, please be sure to use twisted-pair cable.

F3NC32-ON/F3NC34-ON Connection with the Yokogawa Electric Corp.

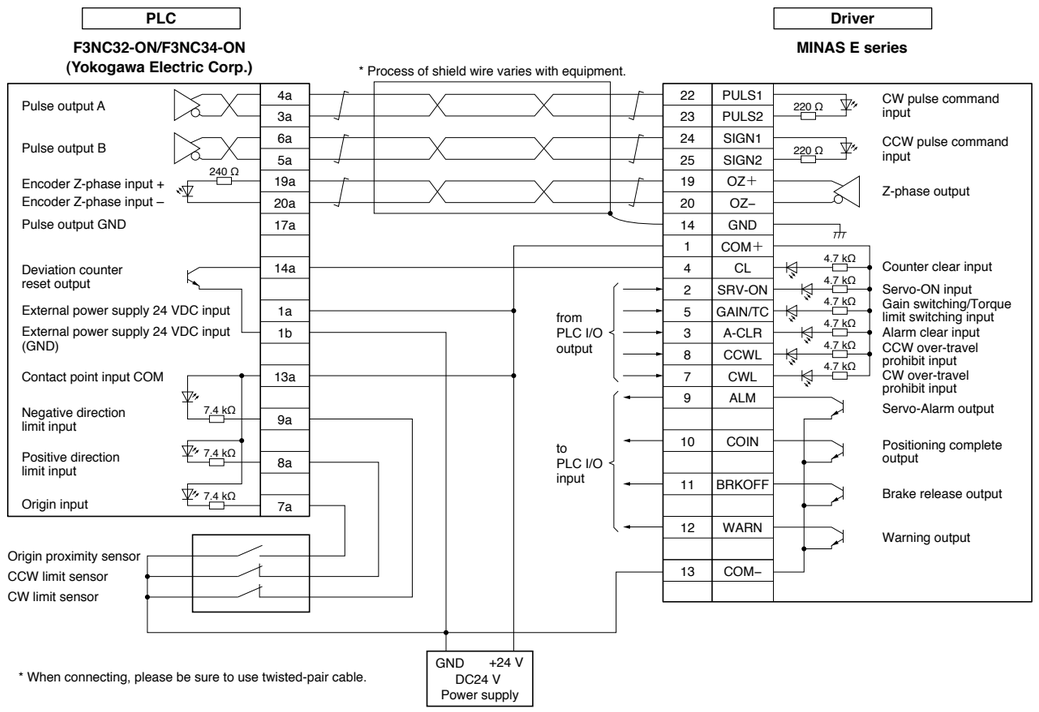

* When connecting, please be sure to use twisted-pair cable.

CJ1W-NC133 Connection with the Omron Corp.

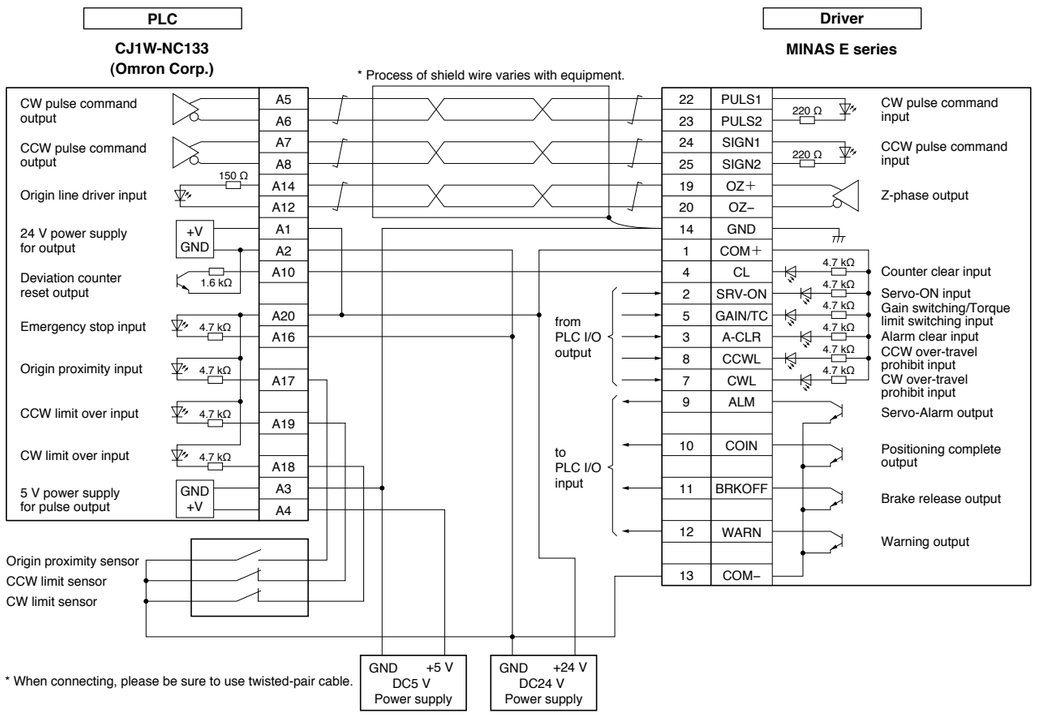

* When connecting, please be sure to use twisted-pair cable.

Connection Between Driver and Controller

QD75D1 Connection with the Mitsubishi Electric Corp.

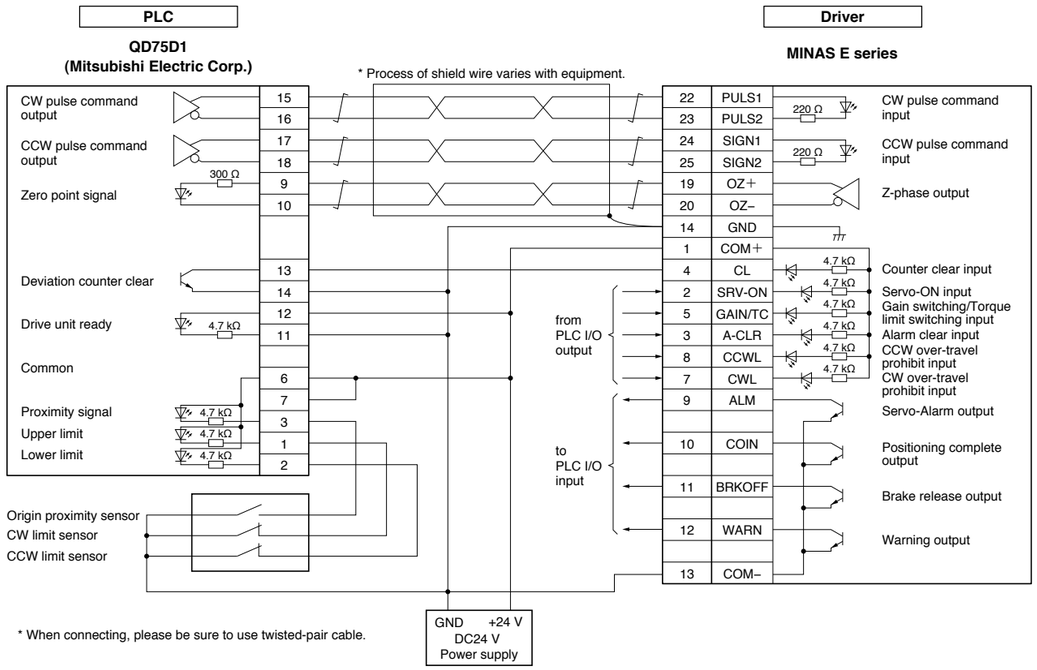

Index
(Alphabetical Order)

Index
(Alphabetical Order)

Index
(Alphabetical Order)

Index
(Alphabetical Order)

Index
(Alphabetical Order)

Index
(Alphabetical Order)

Sales Office

[Panasonic Sales Office of Motors]

(December.01.2015)

Country	Company Name [Category]	City	Address	TEL / FAX
U.S.A	Panasonic Industrial Devices Sales Company of America [Sales office]	New Jersey	Two Riverfront Plaza, 7th Floor Newark, NJ 07102-5490 U.S.A	TEL: +1-800-228-2350
				FAX: —
Brazil	Panasonic do Brazil [Sales office]	Sao Paulo	Avenida do Cafe, 277 Torre A-8 Andar Jabaquara ZIP Code: 04311-900 Sao Paulo SP Brazil	TEL: +55-11-3889-4022
				FAX: +55-11-3889-4103
Germany	Panasonic Industrial Devices Sales Europe GmbH [Sales office] [European Headquarter]	Munich	Hans-Pinsel-Strasse 2 · D - 85540 Haar · Germany	TEL: +49-89-46-159-0
				FAX: +49-89-46-159-212
			e-mail	http://eu.industrial.panasonic.com/about-us/contact-us
			Web site	http://eu.industrial.panasonic.com/products/motors-compressors-pumps
	ghv Vertriebs-GmbH [Distributors]	Munich	Am Schammacher Feld 47 D-85567 Grafing b. Munich	TEL: +49(0)-80-92/81-89-0
				FAX: +49(0)-80-92/81-89-99
			e-mail	http://www.ghv.de/kontakt.html
	Panasonic Electric Works Europe AG [Sales office] [European Headquarter]	Holzkirchen	Rudolf-Diesel-Ring 2, 83607 Holzkirchen, Deutschland	TEL: +49 (0) 8024 648-0
				FAX: +49 (0) 8024 648-111
			e-mail	https://www.panasonic-electric-works.com/eu/93.htm
			Web site	https://www.panasonic-electric-works.com/eu/index.htm
	Panasonic Electric Works Europe AG [Subsidiary]	Holzkirchen	Rudolf-Diesel-Ring 2, 83607 Holzkirchen, Deutschland	TEL: +49 (0) 8024 648-0
				FAX: +49 (0) 8024 648-111
			e-mail	https://www.panasonic-electric-works.com/eu/93.htm
			Web site	https://www.panasonic-electric-works.com/eu/index.htm
France	Panasonic Electric Works Sales Western Europe B.V. [Sales office]	Verrières-Le-Buisson	10, rue des petits ruisseaux, 91370 Verrières-Le-Buisson, France	TEL: +33(0)160135757
				FAX: +31(0)160135758
			e-mail	https://www.panasonic-electric-works.com/eu/93.htm
			Web site	https://www.panasonic-electric-works.com/eu/index.htm
Italy	Panasonic Electric Works Italia srl [Subsidiary]	Verona	Via del Commercio 3-5 (Z.I.Ferlina), 37012 Bussolengo (VR), Italy	TEL: +39-045-6752711
				FAX: +39-045-6700444
			e-mail	https://www.panasonic-electric-works.com/eu/93.htm
			Web site	https://www.panasonic-electric-works.com/eu/322.htm
	Lenze Italia S.r.l. [Distributors]	Milano	Viale Monza 338 20128 Milano	TEL: +39-02-270-98-1
				FAX: +39-02-270-98-290
			e-mail	mail@LenzeItalia.it
			Web site	http://www.lenze.com/it-it/azienda/lenze-in-italia/
United Kingdom	Panasonic Electric Works UK Ltd. [Sales office]	Milton Keynes	Sunrise Parkway, Linford Wood Milton Keynes, MK14 6LF United Kingdom	TEL: +44(0)1908231599
				FAX: +44(0)1908231555
			e-mail	https://www.panasonic-electric-works.com/eu/93.htm
			Web site	https://www.panasonic-electric-works.com/eu/index.htm
	Lenze Limited [Distributors]	Bedford	Priory Business Park, Bedford, MK44 3WH.	TEL: +44-1234-7532-00
				FAX: +44-1234-7532-20
			e-mail	uk.sales@lenze.com
			Web site	http://www.lenze.com/en-gb/about-lenze/lenze-in-united-kingdom/
Austria	Panasonic Electric Works Austria GmbH [Sales office]	Biedermannsdorf	Josef Madersperger Strasse 2, 2362 Biedermannsdorf (Vienna), Austria	TEL: +43(0)2236-26846
				FAX: +43(0)2236-46133
			e-mail	https://www.panasonic-electric-works.com/eu/93.htm
			Web site	https://www.panasonic-electric-works.com/eu/index.htm
Polska	Panasonic Electric Works Polska sp. z.o.o. [Sales office]	Warszawa	ul. Wołoska 9a, 02-583 Warszawa	TEL: +48(0)22338-11-33
				FAX: +48(0)22213-95-01
			e-mail	https://www.panasonic-electric-works.com/eu/93.htm
			Web site	https://www.panasonic-electric-works.com/eu/index.htm
Nederland	Panasonic Electric Works Sales Western Europe B.V. [Sales office]	PJ Best	De Rijn 4 (Postbus 211), 5684 PJ Best, Nederland	TEL: +31(0)499372727
				FAX: +31(0)499372185
			e-mail	https://www.panasonic-electric-works.com/eu/93.htm
			Web site	https://www.panasonic-electric-works.com/eu/index.htm

Sales Office

Country	Company Name [Category]	City	Address	TEL / FAX
Czech Republic	Panasonic Electric Works Czech s.r.o. [Sales office]	Brno	Veveří 3163/111, 616 00 Brno, Czech	TEL +420(0)541217001
				FAX +420(0)541217101
			e-mail	https://www.panasonic-electric-works.com/eu/93.htm
			Web site	https://www.panasonic-electric-works.com/eu/index.htm
Spain	Panasonic Electric Works Espana S.A. [Subsidiary]	Madrid	Barajas Park, San Severo 20, 28042 Madrid, Spain	TEL +34-91-329-3875
				FAX +34-91-329-2976
			e-mail	https://www.panasonic-electric-works.com/eu/93.htm
			Web site	https://www.panasonic-electric-works.com/eu/322.htm
Romania	C.I.T. Automatizari SRL [Distributors]	Bucuresti	sos. Bucuresti, nr.63, Ciorogirla, Ilfov, RO-077055, ROMANIA	TEL +40-21-255-0543
				FAX +40-21-255-0544
			e-mail	office@citautomatizari.ro
			Web site	http://www.citautomatizari.ro
Hungary	Panasonic Electric Works Hungary [Sales office]	Budapest	Neumann J. u. 1., 1117 Budapest, Hungary	TEL +36(0)19998926
				FAX +36(0)19998927
			e-mail	https://www.panasonic-electric-works.com/eu/93.htm
			Web site	https://www.panasonic-electric-works.com/eu/index.htm
Switzerland	Panasonic Electric Works Schweiz AG [Sales office]	Rotkreuz	Grundstrasse 8, 6343 Rotkreuz, Schwitzerland	TEL +33(0)417997050
				FAX +31(0)417997055
			e-mail	https://www.panasonic-electric-works.com/eu/93.htm
			Web site	https://www.panasonic-electric-works.com/eu/index.htm
Russia	Electroprivod Ltd. [Distributors]	St.Petersburg	Office 417, litera 43, Polustrovskiy avenue, Saint-Petersburg, Russia	TEL +7-812-703-09-81
				FAX +7-812-493-27-26
			Web site	http://www.electroprivod.ru
Turkey	BOSTEK TEKNOLOJI GELISTIRME VE ROBOT SIST.SAN.TIC.A.S [Distributors]	Izmir	10042 SOK.NO:10 A.O.S.B CIGLI-IZMIR, TURKEY	TEL +90 232 433 8515
				FAX +90 232 433 8881
			e-mail	sales@bostek.com.tr
			Web site	http://www.bostek.com.tr/
	Savior Kontrol Otomasyon [Distributors]	Istanbul	Des Sanayi Sitesi 104 Sokak A07 Blok No:02 Yukarı Dudullu Ümraniye İstanbul Turkey	TEL +90-216-466-3683
				FAX +90-216-466-3685
			e-mail	info@savior.com.tr
			Web site	http://www.savior.com.tr/
China	Panasonic Industrial Devices Sales (Hong Kong) Co.,Ltd. (PIDSHK) [Sales office]	Hong kong	Top Floor, South Wing, ChinaChem Gloden Plaza, 77 Mody Road, S.T.S. East, Kowloon, HongKong	TEL +852-2529-7322
				FAX +852-2598-9743
	Panasonic Industrial Devices Sales (China) Co.,Ltd. (PIDSCN) [Sales office]	Shanghai	Floor 6, China Insurance Building, 166 East Road LuJiaZui PuDong New District, Shanghai, China	TEL +86-21-3855-2442
				FAX +86-21-3855-2375
	Panasonic Industrial Devices Sales (China) Co.,Ltd. (PIDSCN) [Sales office]	Shenzhen	8/F, Tower Three, Kerry Plaza, 1-1 Zhongxinsi Road, Futian District, Shenzhen, China	TEL +86-755-8255-8791
				FAX —
India	Industrial Division, Panasonic India Pvt Ltd. [Sales office]	Gurgaon, Haryana	12th Floor, Ambience Commercial, Behind Ambience Mall, Gurgaon - 122002, Haryana, India	TEL +91-124-6670400
				FAX +91-124-6670338
			Web site	http://industrial.panasonic.com/sa/products/motors-compressors/fa-motors
	Lubi Electronics [Distributors]	Gandhinaga, Gujarat	Sardar Patel Ring Road, Near Bright School, Nana Chiloda, Dist.: Gandhinagar - 382330, Gujarat, India	TEL +91-79-39845300
				FAX +91-79-39845599
			Web site	http://www.lubielectronics.com
	Luna Bearings [Distributors]	Mumbai, Maharashtra	59, Bibijan Street, 2nd Floor, Moiz Manzil, Mumbai - 400003, Maharashtra, India	TEL +91-22-23455052
				FAX +91-22-23427773
			Web site	http://www.lunabearings.com
	Vashi Electricals Pvt. Ltd. [Distributors]	Mumbai, Maharashtra	A/6, Plot No.74, Shree Ganesh Complex, Behind Gupta Compound, Dapole Road, Mankoli Naka, Bhiwandi - 421305, Maharashtra, India	TEL +91-2522-661600
				FAX +91-2522-661620
			Web site	http://www.vashielectricals.com

Country		Company Name [Category]	City	Address	TEL / FAX
Korea		Panasonic Industrial Devices Sales Korea Co., Ltd. (PIDSKR) [Sales office]	Seoul	6F DONG-IL Tower 38, Teheran-ro 114-gil, Gangnam-gu, Seoul, 135-851, Korea	TEL +82-2-795-9600
					FAX +82-2-2052-1053
Taiwan		Panasonic Industrial Devices Sales Taiwan Co.,Ltd. [Sales office]	Taipei	12F, No.9, SongGao Rd., Taipei 110, Taiwan, R.O.C.	TEL +886-2-2757-1900
					FAX +886-2-2757-1977
South-eastern Asia		Panasonic Industrial Devices Sales Asia Pte.Ltd. [Sales office]	Singapore	No.3 Bedok South Road Singapore 469269	TEL +65-6390-3718
					FAX +65-9435-6844
	Singapore	Intermech Machinery Pte.Ltd. [Distributors]	Singapore	2 Woodlands Sector 1 #03-25, Woodlands Spectrum 1 Singapore 738068	TEL +65-6751-5088
					FAX +65-6759-2122
				Web site	http://www.intermech.com.sg
	Malaysia	Panamech Machinery Sdn Bhd [Distributors]	Kuala Lumpur	No.14, Lorong Sanggul 1C, Bandar Puteri, 41200 Klang, Selangor Darul Ehsan	TEL +60-3-5161-7876
					FAX +60-3-5161-7136
				Web site	http://panamech.com.my/
		Panamech (PG) Sdn Bhd [Distributors]	Penang	Sri Relau Komplex, Unit 1-3-11, Persiaran Bukit Jambul 1, 11900 Penang	TEL +60-4-643-8266
					FAX +60-4-645-1639
				Web site	http://panamech.com.my/
	Thailand	Premier Automation Center Co.,Ltd. [Distributors]	Bangkok	73 Soi Ladkrabang 30 Ladkrabang Ladkrabang Bangkok 10520	TEL +66-2181-2299
					FAX +66-2181-2288
				Web site	http://www.premier-ac.co.th
		Plenty Island (Thai) Co.,Ltd. [Distributors]	Bangkok	3 Soi Charoenrat 10, Charoenrat Road., Bangkhlo, Bangkhorlaem, Bangkok 10120	TEL +66-2291-9933
					FAX +66-2291-2065
				Web site	http://www.plenty.co.th
	Indonesia	PT. Handal Yesindo Sejahtera [Distributors]	Surabaya	Jl. Raya Kutisari 8A, Surabaya, Indonesia	TEL +62-31-843-8844
					FAX +62-31-841-4333
				Web site	http://www.handalyesindo.com
		PT.Riasarana Electrindo [Distributors]	Jakarta	Jl. Prof. Dr. Latumenten Grogol Permai blok D No. 8-15 Jakarta 11460, Indonesia	TEL +62-21-564-9178
					FAX +62-21-566-7405
				Web site	http://www.risacorps.com
	Philippines	Movaflex Designs Unlimited, Inc. [Distributors]	Manila	136 Calbayog Street, Mandaluyong City, Metro Manila, Philippines.	TEL +63-2-881-3636
					FAX +63-2-998-3881
				Web site	http://www.movaflex.com/